T/Ladd/Tehachapi/Antelope/1104-241

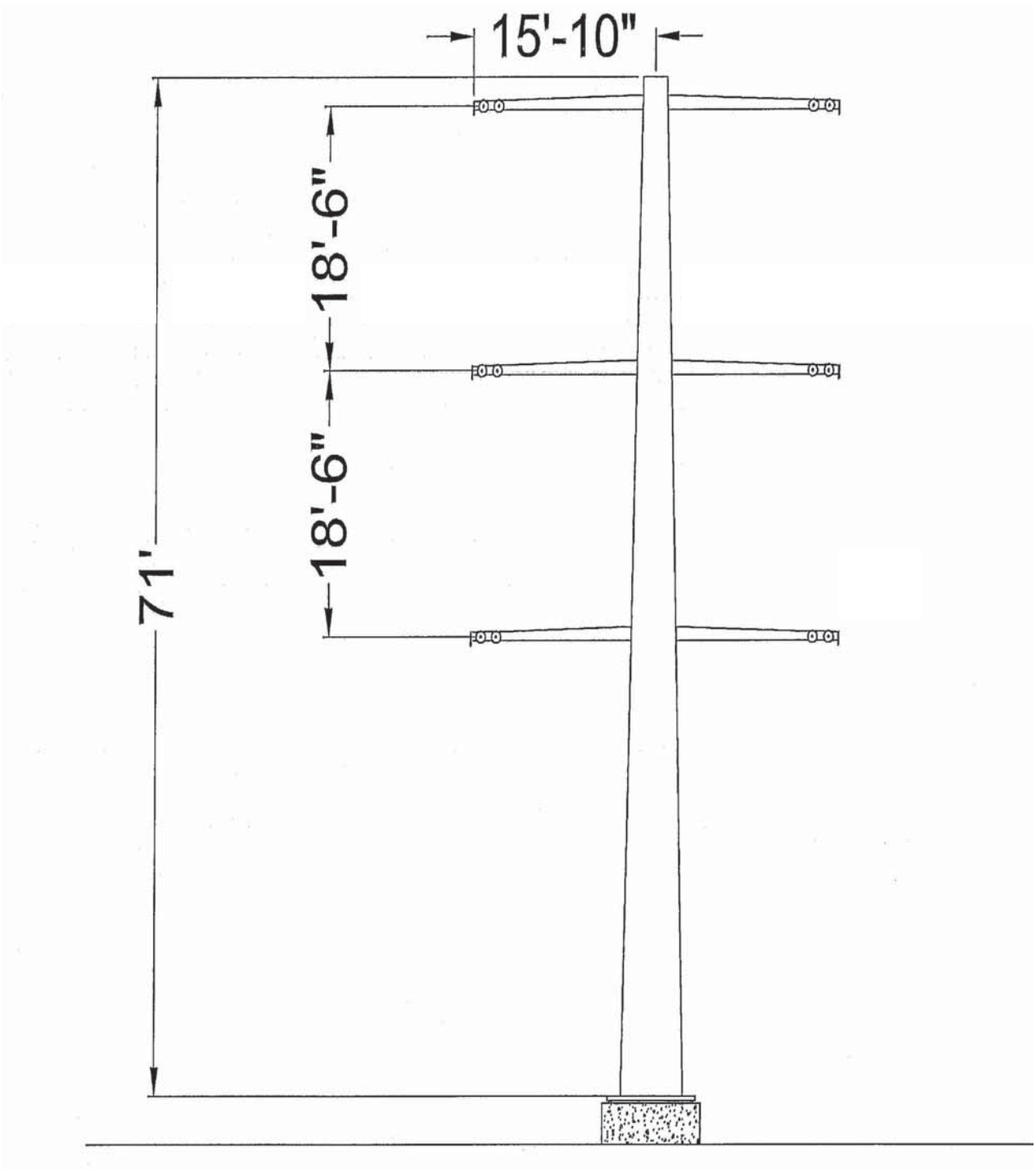

SOUTHERN CALIFORNIA EDISON An EDISON INTERNATIONAL® Company	Antelope Transmission Project PEA - Segments 2 & 3	Figure 3-12. TYPICAL 220 kV DOUBLE CIRCUIT TUBULAR POLE	2005