TABLE OF CONTENTS

3.1 PROJECT LOCATION 3-1
3.1.0 Existing 625 Line 3-1
3.1.1 New 625 Line 3-2
3.1.2 650 Line 3-2
3.1.3 132 Line 3-6
3.1.4 Northstar Tap/Fold 3-6
3.1.5 629 Line 3-6
3.1.6 Substations and Switching Stations 3-7
3.2 EXISTING SYSTEM 3-8
3.3 PROJECT OBJECTIVES 3-8
3.4 PROPOSED PROJECT 3-15
3.5 PROJECT COMPONENTS 3-16
3.5.0 Transmission Lines 3-16
3.5.1 Substations 3-20
3.5.2 Electrical Need Area 3-28
3.6 RIGHT-OF-WAY REQUIREMENTS 3-28
3.6.0 Temporary 3-28
3.6.1 Permanent 3-29
3.7 CONSTRUCTION 3-29
3.7.0 Staging Areas 3-29
3.7.1 Work Areas 3-32
3.7.2 Access and Spur Roads 3-35
3.7.3 Helicopter Access 3-36
3.7.4 Vegetation Clearing 3-38
3.7.5 Erosion and Sediment Control and Pollution Prevention 3-39
3.7.6 Transmission Line Construction Methods 3-39
3.7.7 Cleanup and Post-Construction Restoration 3-46
3.7.8 Substation Construction Methods 3-46
3.7.9 Construction Workforce and Equipment 3-47
3.7.10 Construction Schedule 3-47
3.8 OPERATION AND MAINTENANCE 3-55
3.8.0 Transmission Lines 3-55
3.8.1 Substations and Switching Stations 3-57
3.8.2 Electric and Magnetic Fields 3-57
3.9 REQUIRED PERMITS AND AUTHORIZATIONS 3-57
3.10 APPLICANT-PROPOSED MEASURES 3-57

LIST OF FIGURES

Figure 3–1: Project Location Map 3-3
Figure 3–2: North Lake Tahoe Transmission System Schematic 3-9
Figure 3–3: Existing North Lake Tahoe Transmission System Map 3-11
Figure 3–4: Proposed North Lake Tahoe Transmission System Map 3-13
Figure 3–5: Proposed Typical Underground Distribution Duct Bank 3-25
Figure 3–6: Proposed 14.4-kV Typical Riser 3-26
Figure 3–7: Proposed Typical Underground Splice Vault 3-27
Figure 3–8: Conductor Installation 3-43

LIST OF TABLES

Table 3-1: Transmission Line Summary 3-17
Table 3-2: Substation and Switching Station Summary 3-17
Table 3-3: Substation Equipment Details 3-21
Table 3-4: Temporary ROW Requirements 3-28
Table 3-5: Staging Area Summary 3-30
Table 3-6: Temporary Workspace Requirements 3-33
Table 3-7: New Spur Road Summary 3-35
Table 3-8: Access Road Construction Equipment 3-36
Table 3-9: Project Access Roads 3-37
Table 3-10: Truck Trip Requirements 3-37
Table 3-11: Peak Construction Personnel 3-48
Table 3-12: Typical Major Construction Equipment 3-49
Table 3-13: Proposed Construction Schedule 3-56
Table 3-14: Required Permits and Authorizations 3-58
Table 3-15: Compliance Levels 3-60
Table 3-16: Environmental Compliance Team 3-60
Table 3-17: Applicant-Proposed Measures 3-61

LIST OF ATTACHMENTS

Attachment 3-A: Detailed Route Maps
Attachment 3-B: Transmission Pole Summary
Attachment 3-C: Transmission Pole Typical Drawings
Attachment 3-D: Substation Plot Plans and Elevation Drawings
Attachment 3-E: Electric and Magnetic Fields

CHAPTER 3 – PROJECT DESCRIPTION

3.1 PROJECT LOCATION

The proposed 625 and 650 Line Upgrade Project (project) is located in northeastern Placer County and southeastern Nevada County, California. A general project location map has been included as Figure 3–1: Project Location Map and project route maps are included in Attachment 3-A: Detailed Route Maps.

For the purposes of this document and to better describe the project's location, the project is divided into the following six components:

1. Removing the existing 625 Line
2. Constructing the new, rerouted 625 Line to include a double-circuit with a portion of the 629 Line and a double-circuit with a portion of the 650 Line
3. Rebuilding the existing 650 Line
4. Rebuilding the Northstar Tap into a Fold
5. Rebuilding the existing 132 Line to include a double-circuit with the 650 Line
6. Upgrading, modifying, and/or decommissioning six substations and switching stations

The existing 625 Line and the new 625 Line alignment generally run in a northeast-southwest direction between the communities of Kings Beach and Tahoe City. The 650 Line runs from the Town of Truckee to Kings Beach in a predominantly northwest-southeast direction, paralleling California State Route (SR) 267 for much of its length. The Northstar Tap runs in a southwest-northeast direction, paralleling Northstar Drive, which serves the Northstar-at-Tahoe Resort. The section of the 132 Line that will be reconfigured is located in Truckee between the North Truckee Switching Station and Brockway Road, and runs in a generally northwest-southeast direction.

The project components are predominantly located on lands managed by the United States (U.S.) Department of Agriculture, Forest Service (USFS); these lands are located in the Tahoe National Forest and in the Lake Tahoe Basin Management Unit. The project also spans the Town of Truckee and the communities of Kings Beach and Tahoe City. Land use in the project area is predominantly forested, with segments of residential, industrial, and tourism-related uses where the project components enter more developed communities. Work will generally occur within existing Sierra Pacific Power Company (SPPCo) rights-of-way (ROW), or on SPPCo-owned property. However, the realignment of the 625 Line will require SPPCo to secure a new 40-foot-wide permanent ROW on private and USFS land. The locations of these components are depicted in Figure 3–1: Project Location Map and described in more detail as follows.

3.1.0 Existing 625 Line

The existing 625 Line originates at the Kings Beach Switching Station, which is located within the Kings Beach Diesel Generation Station, situated north of the intersection of Deer Avenue and Speckled Avenue in Kings Beach. From the switching station, the line heads southwest for approximately 250 feet before turning northwest for approximately 1,000 feet. The line then

turns north for approximately 1 mile, spanning Lake Vista Road. The line then turns west for approximately 2.5 miles and spans SR 267 at approximate milepost (MP) 3.7. From the intersection with SR 267, the 625 Line heads southwest and continues across the Tahoe National Forest for approximately 6.2 miles, and then heads south for approximately 3.2 miles. The line then turns east for approximately 0.5 mile and runs adjacent to the southern border of Burton Creek State Park near approximate MP 13.5. From this location, the 625 Line turns to the south and continues through the Tahoe National Forest for approximately 1.3 miles. The line then turns southeast for approximately 0.3 mile, spanning California SR 89 and the Truckee River at approximate MP 15.1. The line parallels the Truckee River in a northeasterly direction for approximately 1,200 feet before turning southeast for approximately 200 feet. The line terminates at the Tahoe City Substation located on the west side of SR 89, across from the Truckee River Outlet (Fanny Bridge). The existing 625 Line contains a distribution underbuild between approximate MP 3.4 and MP 3.7 and between approximate MP 15.3 and the Tahoe City Substation.

3.1.1 New 625 Line

The Kings Beach Substation will serve as the origin of the new 625 Line. From the substation, the line will head southwest for approximately 250 feet before turning northwest for approximately 1,000 feet. The line will then turn north for approximately 1 mile, spanning Lake Vista Road. From Lake Vista Road, the line will head in a westerly direction for approximately 2.3 miles and will span SR 267 at approximate MP 3.6. From the intersection with SR 267, the new 625 Line alignment will head southwest and parallel Mount Watson Road (also known as the Fiberboard Highway) across the Tahoe National Forest for approximately 9.9 miles. The alignment will then turn east for approximately 0.4 mile and run adjacent to the southern border of Burton Creek State Park. At approximate MP 14, the new 625 Line will turn to the south and continue through the Tahoe National Forest for approximately 1.3 miles. The line will then turn southeast for approximately 0.3 mile, spanning SR 89 and the Truckee River at approximate MP 15.5. The line will parallel the Truckee River in a northeasterly direction for approximately 1,200 feet before turning southeast for approximately 200 feet. The line will terminate at the Tahoe City Substation located on the west side of SR 89 across from the Truckee River Outlet (Fanny Bridge). Between approximate MP 0.1 and approximate MP 0.7, the 625 Line will be double-circuited with the 650 Line. The new 625 Line will also be double-circuited with the 629 Line between approximate MP 14.2 and their termination at the Tahoe City Substation. The distribution circuit, currently underbuilt between approximate MP 3.4 and MP 3.7 and between approximate MP 15.3 and the Tahoe City Substation of the existing 625 Line, will be transferred to the new 625 Line as a result of this project.

3.1.2 650 Line

The 650 Line originates at the Truckee Substation, located near the intersection of Church Street and Donner Pass Road in the Town of Truckee. The existing line follows a generally southeasterly direction for approximately 14 miles before terminating at the Brockway Substation, located near the intersection of Deer Avenue and Speckled Avenue in Kings Beach.

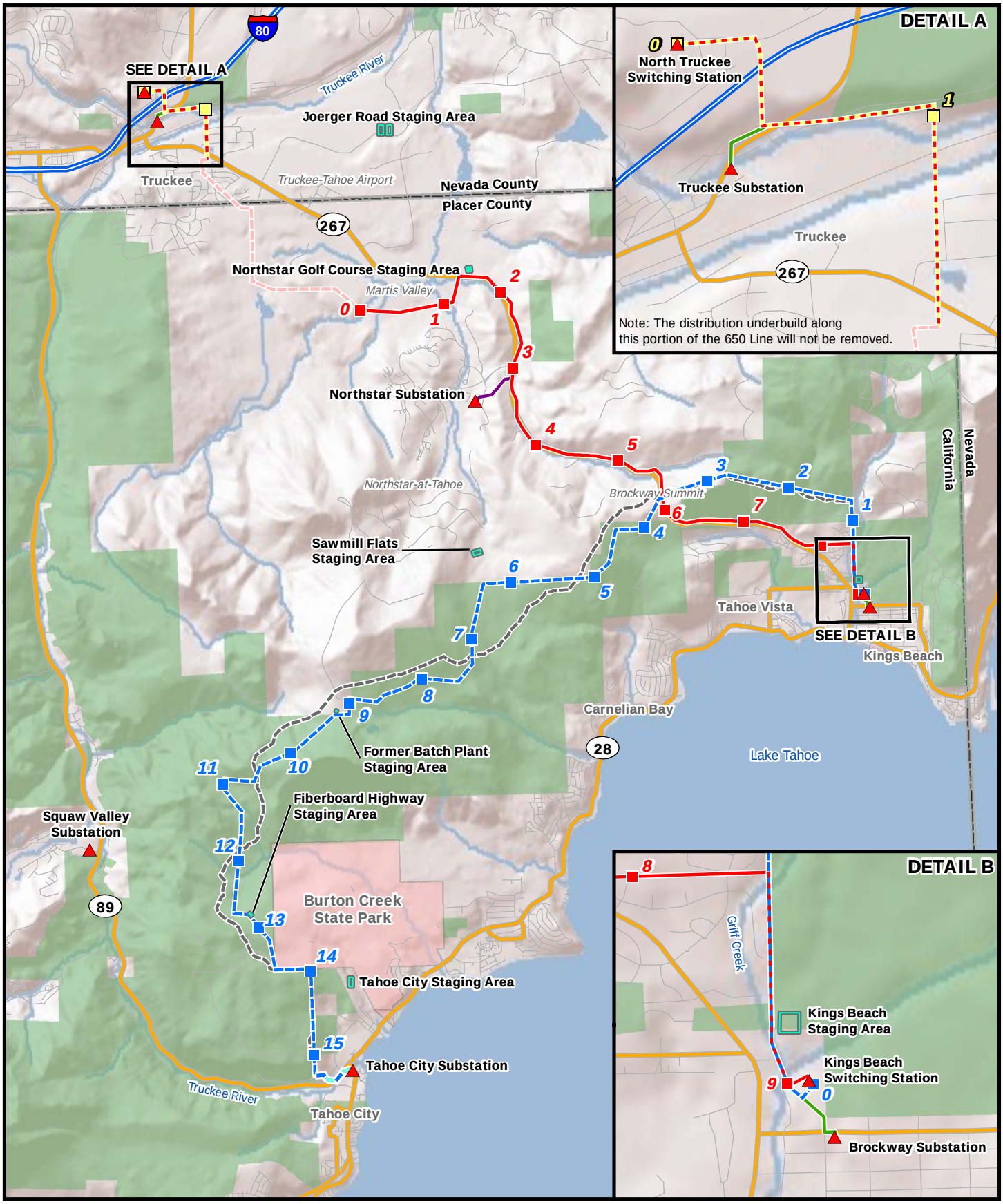

Figure 3-1: Project Location Map

625 and 650 Line Upgrade Project

- New 625 Line
- Existing 625 Line
- 625/629 Double-Circuit
- 650 Line to be Rebuilt
- 650 Line Previously Upgraded
- 132/650 Double-Circuit to be Rebuilt
- 650 Line to be Removed
- Northstar Fold
- Substation/Switching Station
- Staging Area
- Milepost (Color Coded by Line)

Sierra Pacific™

INSIGNIA ENVIRONMENTAL

1:100,000

0 0.5 1 2 3 4 5 Miles

N W E S

Z:\GIS\Projects and Data\California\Projects\NLT\Mxds\PEA\FINAL_DRAFT\3-1_Proj_Location.mxd

4/2/2010

650 Line Previously Upgraded

In the 1990s, approximately 3 miles of the 650 Line were upgraded to 120 kV as the result of multiple construction projects. This 3-mile-long section begins within five poles of the Truckee Substation and continues to the fourth pole past the riser structure, which is located approximately 0.3 mile from the end of Bob Haslem Court near the Lahontan Golf Course. In addition to the voltage upgrade, portions of this 3-mile-long section were converted from an overhead to an underground configuration. The previously upgraded portion of the 650 Line is depicted in Figure 3–1: Project Location Map.

650 Line to be Rebuilt

Approximately 10 miles of the existing 650 Line will be rebuilt as part of the project. From the intersection with the previously upgraded portion, the 650 Line heads east, starting in Martis Creek Lake National Recreation Area at MP 0, where it continues for approximately 0.5 mile before crossing an approximately 40-acre parcel owned by the USFS. At approximate MP 0.7, the line exits USFS land and continues east across the Martis Creek Lake National Recreation Area. At approximate MP 1.1, the line then turns north for approximately 0.3 mile and crosses SR 267 at approximate MP 1.4. The line turns east for approximately 0.5 mile, entering the Tahoe National Forest at approximate MP 1.9, and continues to parallel the east side of SR 267 in a southerly direction for approximately 4 miles to the intersection with the existing and new 625 lines at approximate MP 5.9.

After crossing the 625 Line, the 650 Line continues southeast for approximately 1.9 miles. The line turns east near the intersection of SR 267 and North National Avenue in Kings Beach and continues for approximately 0.6 mile, spanning Stewart Drive at approximate MP 8.0. The line then heads south for approximately 0.5 mile before veering to the southeast for approximately 0.2 mile, near approximate MP 9. From approximate MP 9, the existing 650 Line turns in a northeasterly direction for approximately 320 feet before entering the Kings Beach Switching Station, which is situated north of the intersection of Deer Avenue and Speckled Avenue. Upon completion of the loop upgrade, the Kings Beach Switching Station will be upgraded to a 120-kV substation, which will be referred to as the Kings Beach Substation. The Kings Beach Substation will become the new terminus for the rebuilt 650 Line. Between approximate MP 8.4 and approximate MP 9.0, the 650 Line will be double-circuited with the new 625 Line. The existing 650 Line also contains distribution and cable/telecommunications facilities underbuilt along its entire length except between approximate MP 6.0 and MP 6.5.

650 Line to be Removed

Two portions of the existing 650 Line will be removed as part of the project. The first portion originates at the Truckee Substation and heads north, crossing over Trout Creek Road, Donner Pass Road, and East Keiser Avenue. The segment then turns east until its intersection with the existing 132 Line. This segment is approximately 0.2 mile long and is configured with a distribution line underbuild, which will remain upon completion of the project.

The second portion to be removed is located between the existing Kings Beach Switching Station and Brockway Substation. From the Kings Beach Switching Station, the segment travels in a generally southeast direction for approximately 0.2 mile, crosses Speckled Avenue, crosses Deer

Street, and terminates at the Brockway Substation. The Kings Beach Switching Station will be upgraded to a 120-kV substation as part of this project, and will be referred to as the Kings Beach Substation. Upon completion of the loop upgrade, the Brockway Substation will be decommissioned, and the terminus of the 650 Line will be relocated to the new Kings Beach Substation.

3.1.3 132 Line

The section of the 132 Line that will be rebuilt to accommodate a double-circuit of the 650 Line originates at North Truckee Switching Station. The line exits the station and travels east for approximately 0.1 mile before spanning Pioneer Trail Road. The line then continues west, paralleling Pioneer Trail Road, for approximately 0.1 mile before turning south, spanning Pioneer Trail Road and Interstate 80 at approximate MP 0.3. At approximate MP 0.5, the line turns east, crosses over Donner Pass Road and parallels Glenshire Drive until approximate MP 1.0. The line then heads south, spanning Glenshire Drive, the Union Pacific Railroad, and East River Street at approximate MP 1.1; the Truckee River at approximate MP 1.2; Estates Drive at approximate MP 1.4; and Brockway Road at approximate MP 1.5. The line continues south, spanning the parking lot of the Cedar House Sport Hotel until approximate MP 1.6. The existing 650 Line contains a distribution underbuild that will be transferred to the new line between approximate MP 0.5 and MP 1.6 on the 132/650 Line Double-Circuit. A second distribution circuit will be underbuilt from approximate MP 1.2 and head south until intersecting with the 650 Line to be Removed, where it will continue to the Truckee Substation.

3.1.4 Northstar Tap/Fold

The Northstar Tap originates at the Northstar Substation, located at the end of Stable Road. The line exits the substation in a northeasterly direction before turning east at approximate MP 0.4. The line then continues east and spans SR 267 at approximate MP 0.5 and terminates at the intersection with the 650 Line. The existing Northstar Tap contains a distribution underbuild along its entire length. This distribution circuit will be transferred over to the Northstar Fold as a result of the project.

3.1.5 629 Line

The 629 Line originates at the Squaw Valley Substation, located near the intersection of Squaw Valley Road and SR 89, and terminates at the Tahoe City Substation. The transmission line has been previously upgraded from 60 kV to 120 kV from the Squaw Valley Substation to its intersection with the existing 625 line at approximate MP 15.25 however, it is currently operating at 60 kV. The remaining portion of the 629 Line, from its intersection with the existing 625 Line to the Tahoe City Substation will be constructed as a double-circuit configuration with the new 625 Line. This double-circuit portion will be upgraded and reconductored as a result of this project. Once the remainder of the project is complete and ready for operation at 120 kV, the 629 line will be operated in its entirety at 120 kV.

3.1.6 Substations and Switching Stations

Brockway Substation

The Brockway Substation is located in Kings Beach at the intersection of Speckled Avenue and Deer Street. This substation is the current terminus of the 650 Line. The distribution feeders associated with the Brockway Substation will be relocated to the new Kings Beach Substation and the Brockway Substation will be decommissioned at the end of the project.

Northstar Substation

The Northstar Substation is located near the intersection of Stables Road and Northstar Drive in Placer County. This substation is the current termination point for the Northstar Tap, which will be upgraded to a fold. Work at this substation will occur within the existing substation fence line.

Squaw Valley Substation

The Squaw Valley Substation is located at the intersection of Squaw Valley Road and SR 89 in Placer County. The Squaw Valley Substation is the terminus for the 609 Line and 132 Line, and the origin of the 629 Line to Tahoe City. A minor 120-kV bus upgrade and the installation of a new 120-kV circuit breaker at the Squaw Valley Substation will be necessary to operate the previously upgraded 629 Line. Work at this substation will occur within the existing substation fence line.

Tahoe City Substation

The Tahoe City Substation is located near the intersection of Westlake Boulevard/SR 89 and Tahoe Tavern Road in Tahoe City. This substation is the current termination point for the existing 625 Line and 629 Line, and will be the terminus of the new 625 Line. The permanent components required to rebuild and operate the Tahoe City Substation will all be installed within the existing fence line; however, two temporary transformers will be installed on an adjacent 1-acre parcel for use during construction.

Truckee Substation and North Truckee Switching Station

The Truckee Substation serves as the current point of origin for the 650 Line and is located near the intersection of Donner Pass Road and East Church Street in Truckee. The North Truckee Switching Station is located on Pioneer Trail Road just south of Comstock Drive. Upon completion of the loop upgrade, the origin of the 650 Line will be relocated from the Truckee Substation to the North Truckee Switching Station after the installation of a new 120-kV bay. Work at these stations will occur within the existing outer fence lines.

Kings Beach Switching Station

The Kings Beach Switching Station is located within the Kings Beach Diesel Generation Station, which is just north of the intersection of Speckled Avenue and Deer Street in Kings Beach. Currently, the existing 650 Line intercepts the Kings Beach Switching Station before terminating at the Brockway Substation. The Kings Beach Switching Station is also the current origin of the existing 625 Line. The Kings Beach Switching Station will be rebuilt into the Kings Beach Substation as part of this project, which will serve as the origin of the new 625 Line and new terminus of the 650 Line. To facilitate the upgrade of this facility to a 120-kV substation, some

activities will occur outside of the existing facility's fence line; however, all work will occur within the larger SPPCo-owned parcel that houses the Kings Beach Diesel Generation Station.

3.2 EXISTING SYSTEM

The north Lake Tahoe transmission system is a loop comprised of a series of 60-kV and 120-kV transmission lines running from Truckee to Squaw Valley to Tahoe City to Kings Beach and then back to Truckee. Specifically, the following lines comprise this loop:

- One 60-kV transmission line (609 Line) and one 120-kV transmission line (132 Line) from Truckee to Squaw Valley
- One 60-kV transmission line from Squaw Valley to Tahoe City (629 Line)
- One 60-kV transmission line from Tahoe City to Kings Beach (625 Line)
- One 60-kV transmission line from Kings Beach to Truckee (650 Line)

All of these transmission lines combined can supply a maximum of 88 megavolt-amperes (MVA) of electricity to the north Lake Tahoe area. Figure 3–2: North Lake Tahoe Transmission System Schematic depicts the current and proposed configuration of the north Lake Tahoe Transmission System. Figure 3–3: Existing North Lake Tahoe Transmission System Map and Figure 3–4: Proposed North Lake Tahoe Transmission System Map depict the location of these facilities.

3.3 PROJECT OBJECTIVES

The project is being proposed to meet objectives identified by SPPCo and the CPUC. Specifically, the project has the following five primary objectives:

1. To provide reliable capacity during single-contingency outages. At 60 kV, the existing north Lake Tahoe transmission system is unable to maintain the necessary capacity to power the service area if one of the four legs of the system is damaged. When one of the four legs in the circuit is damaged, significant voltage drops occur across the system, producing brownouts and blackouts. Once upgraded, the entire system will be able to maintain the current maximum system loads while experiencing an outage on any one of the four legs of the system (single-contingency reliability).[1]
2. To provide additional normal capacity for projected future loads in the north Lake Tahoe area. The current north Lake Tahoe transmission system loop has a normal capacity of 88 MVA. Upon completion of the upgrade to 120 kV, the system will be capable of 114 MVA, which will accommodate peak loads and should provide adequate normal capacity to accommodate current and projected growth in the area.

[1] SPPCo uses General Electric's Positive Sequence Load Flow software to plan the expansion of future power systems and to manage the operation of their existing system.

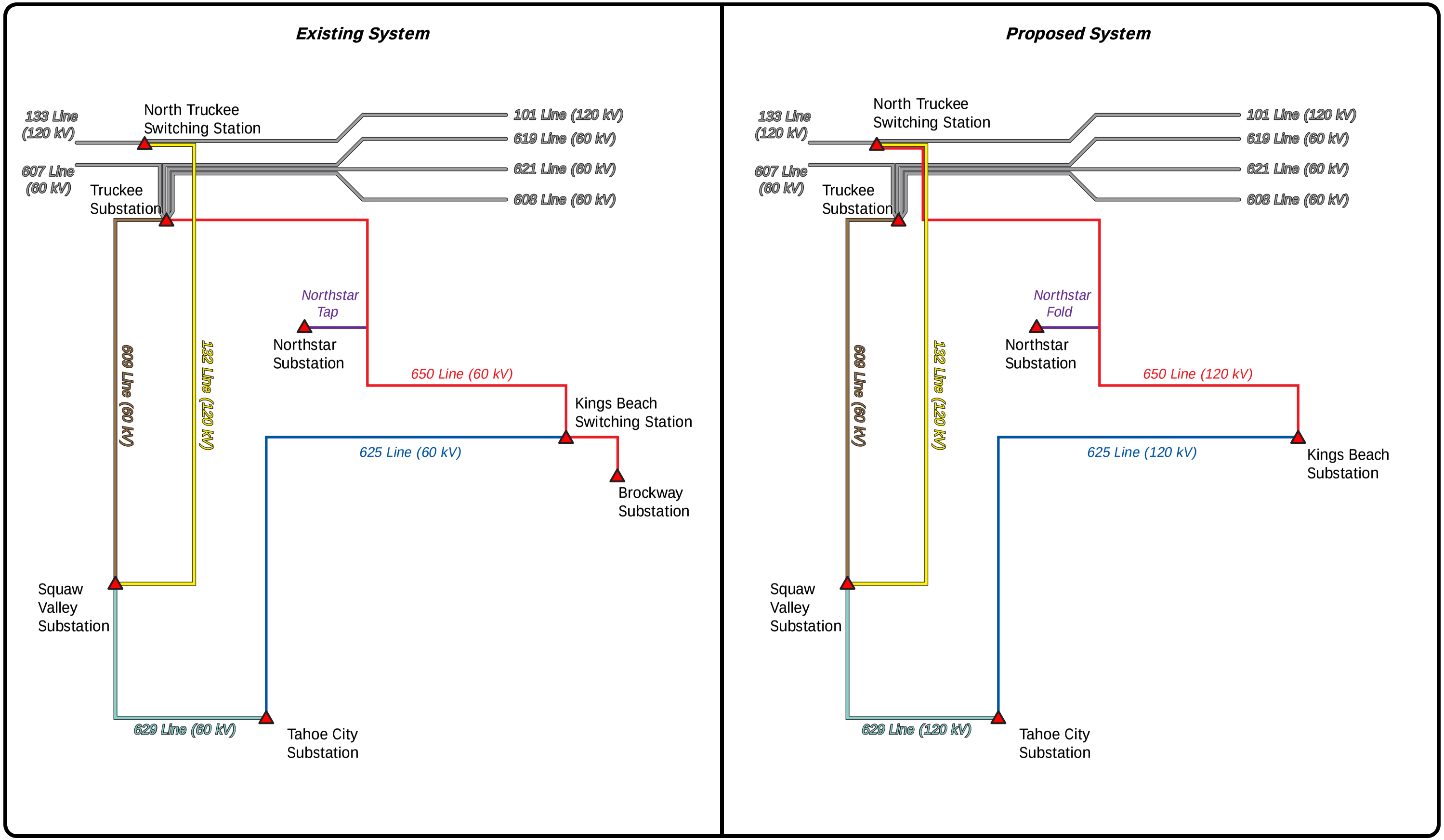

Figure 3-2: North Lake Tahoe Transmission System Schematic

Sierra Pacific™

Figure 3–3: Existing North Lake Tahoe Transmission System Map

Figure 3-3: Existing North Lake Tahoe Transmission System Map has been omitted from this document due to its confidential nature.

Figure 3–4: Proposed North Lake Tahoe Transmission System Map

Figure 3-4: Proposed North Lake Tahoe Transmission System Map has been omitted from this document due to its confidential nature.

3. To reduce dependence on the Kings Beach Diesel Generation Station. The Kings Beach Diesel Generation Station is the only source of the system's single-contingency reliability; however, the facility's air permit limits it operation to 721 hours annually. Upon completion of the project, use of the Kings Beach Diesel Generation Station would only be required for multi-contingency events.
4. To reduce fire hazards and outage durations associated with old wooden poles and encroaching vegetation. Rebuilding the transmission lines with new, more robust steel poles and insulators will dramatically reduce the number of outages experienced over the next decade as a result of high winds blowing over old poles, trees falling into the lines, snow loading, and forest fires.
5. To provide reliable access to the 625 Line for operation and maintenance activities. Approximately 10 miles of the new 625 Line's alignment has been rerouted generally parallel to Mount Watson Road in order to increase access during construction and maintenance activities.

Chapter 2 – Project Purpose and Need provides a more detailed description of these objectives.

3.4 PROPOSED PROJECT

The project consists of the following six major components:

1. Removal of the existing 60-kV 625 Line, which is comprised of approximately 15 miles of existing conductor and 341 wood poles

2. Construction of the new 120-kV 625 Line, comprised of approximately 300 steel poles and 16 miles of new 397.5 MCM AA conductor within a new 40-foot-wide permanent ROW

3. Rebuilding the existing 60-kV 650 Line to operate at 120 kV, which will involve the replacement of approximately 225 wood poles with steel poles and 21 span guy poles, as well as the installation of approximately 10 miles of new 397.5 MCM AA conductor

4. Rebuilding the existing 60-kV Northstar Tap into a fold,[2] which will require the replacement of approximately 14 wood poles with steel poles and 0.5 mile of 397.5 MCM AA conductor in order to operate it at 120 kV

5. Rebuilding an approximately 1.6-mile-long portion of the existing 120-kV 132 Line to accommodate a double-circuit configuration with the 650 Line, which will require the replacement of approximately 30 existing wood poles with steel poles and reconductoring as needed with 397.5 MCM AA conductor.

[2] A fold allows for service to be maintained at a substation in the event of an interruption in service on either side of the transmission line feeding it.

6. Upgrading, modifying, and/or decommissioning six substations and switching stations

These upgrades will increase the north Lake Tahoe Transmission System's normal capacity from 88 MVA to 114 MVA. Each of these components is described in more detail in Section 3.5 Project Components. The methods associated with the construction of these components are described in Section 3.7 Construction. There are no foreseeable future phases or other reasonably foreseeable consequences of the project.

3.5 PROJECT COMPONENTS

The project involves the installation, rebuilding, or removal of five transmission lines, as well as the upgrade, modification, and/or decommissioning of six substations and switching stations. A summary of the activities for each transmission line is included in Table 3-1: Transmission Line Summary. A summary of the activities at each substation or switching station is included in Table 3-2: Substation and Switching Station Summary.

3.5.0 Transmission Lines

Transmission Poles

SPPCo is proposing to remove approximately 610 existing wood poles and replace them with approximately 569 new steel poles. The new poles along the 650 Line and the 132 Line will generally be located within approximately 10 feet of their existing locations. However, some poles may be situated further than 10 feet from the existing poles in order to maximize the efficiency of pole placement and avoid sensitive resources or geological impediments. Some of the poles along the Northstar Fold will be relocated south of the existing Northstar Tap at a distance of up to 50 feet.

The existing poles have an average height of approximately 52 feet above ground; the new poles will be approximately 7 to 12 feet taller than the existing ones. On average, the poles will be located approximately 300 feet apart. In general, 10 percent of the pole height plus 2 additional feet will be buried below ground. Because the poles will range in height from approximately 50 to 87 feet, approximately 7 to 10.7 feet of the poles will be buried below grade. A summary of the poles to be removed and installed, including the pole numbers, configuration, and material has been included as Attachment 3-B: Transmission Pole Summary.[3]

Three types of transmission poles will be installed as part of the project—angle, tangent, and staggered. Angle poles are typically installed in locations where the transmission line must change directions. In areas where the transmission line is generally straight, tangent poles are used. The staggered configuration—also a type of tangent pole—is used between an angle that has a vertical configuration and a tangent that has a triangular configuration to maintain adequate phase spacing (distance between conductors). Each transmission line circuit will require the installation of three separate conductors. In areas where poles need additional stability due to the

[3] Preliminary pole locations provided in Attachment 3-B: Transmission Pole Summary are considered to be accurate to within 10 feet.

Table 3-1: Transmission Line Summary

Line	Length of Conductor (miles)			Alignment	Circuit Type
	Upgraded	Removed	New		
Existing 625	--	15	--	Existing	Single
New 625	--	--	16	New	Single[4]
650	10	0.4	--	Existing	Single
Northstar Fold	0.5	--	--	Existing	Single[5]
132/650 Double-Circuit	1.6[6]	--	--	Existing	Double

Table 3-2: Substation and Switching Station Summary

Station Name	Summary of Activities
Brockway Substation	Substation will be decommissioned and the land will be reclaimed. Work will occur within the existing fence line.
Northstar Substation	Existing tap will be upgraded to a fold. Work will occur within the existing fence line.
Squaw Valley Substation	Minor equipment upgrades—including the installation of a new 120-kV circuit breaker—within the existing fence line will be required to allow the transmission system to operate at 120 kV.
Tahoe City Substation	Substation will be rebuilt within the existing fence line to operate at 120 kV.
Truckee Substation and North Truckee Switching Station	New, 120-kV equipment will be installed at the North Truckee Switching Station within the existing fence line. The origin of the 650 Line will be relocated from the Truckee Substation to the North Truckee Switching Station.
Kings Beach Switching Station	Switching substation will be rebuilt into a new 120 kV substation (Kings Beach Substation). Work will occur within the existing SPPCo-owned parcel, but some activities will occur outside of the existing fence line. The terminus of the 650 Line and distribution feeders will be relocated from the Brockway Substation to the new Kings Beach Substation.

[4] The 625 Line will be double-circuited with the 650 Line and 629 Line at each end.
[5] The Northstar Fold will be configured to look like a double circuit.
[6] The 132 Line conductor has already been upgraded to 397.5 thousand circular mil (MCM) all aluminum (AA) conductor. This number represents the portion of the 650 Line that will be upgraded and double-circuited with the 132 Line.

localized terrain or where the line tension at angle poles dictates the need for more stability, guy wires[7] may be connected to the poles. In some instances, self-supporting steel poles will be installed, eliminating the need for guy wires. No span guy poles[8] will be installed as part of the project. Transmission poles will be constructed to conform to the guidelines within the Suggested Practices for Avian Protection on Power Lines Manual developed by the Avian Power Line Interaction Committee. Typical drawings of the existing and proposed poles have been included in Attachment 3-C: Transmission Pole Typical Drawings. The majority of the new steel poles will be directly buried in the ground. The direct-buried poles will vary in diameter—between 15 inches and 19 inches when measured at the base—depending on a number of factors, including pole height, circuit configuration, and pole class. Self-supporting steel poles will vary in diameter from 3 feet to 6 feet when measured at the base. These poles will be mounted on concrete foundations between 6 feet and 8 feet in diameter and buried approximately 20 feet to 30 feet deep.

As described in Section 3.1 Project Location, distribution and telecommunications/cable lines are currently underbuilt on portions of the existing transmission lines. With the exception of the two portions of the 650 Line to be removed—the first between the Truckee Substation and the intersection with the 132 Line and the second between the Kings Beach Switching Station and the Brockway Substation—these underbuilt lines will be collocated on the corresponding new poles. The poles located along the portions of the 650 Line to be removed will be topped, leaving the underbuilt lines intact. The poles along the 650 Line to be removed between the 132/650 Double-Circuit and the Truckee Substation will be topped to a length that will allow the inclusion of a second distribution circuit above the existing one. Typical drawings illustrating the configuration of collocated utilities are provided in Attachment 3-C: Transmission Pole Typical Drawings.

Conductor

As part of the project, the existing 625 Line will be removed and the majority of it will be rerouted. With the exception of the 3-mile-long segment that was previously upgraded and 0.4 mile of the line to be removed, the 650 Line will be rebuilt within its existing alignment.

The current 625 Line is comprised of 397.5 MCM AA conductor. The non-upgraded portions of the 650 Line are currently a combination of two copper sections, totaling approximately 9 miles in length, while the remainder is 397.5 MCM AA conductor. As part of this project, both lines will be replaced with new 397.5 MCM AA conductor. Portions of the transmission lines will also carry a distribution underbuild and telecommunications/cable lines. The distribution underbuild conductor is comprised of 397.5 AA conductor. The other underbuilt telecommunication/cable lines will be encased in an approximately 1-inch-diameter conduit.

The conductor will be installed with a minimum ground clearance of 25 feet where there are no obstructions, 25 feet where the line crosses rivers, 30 feet where the line crosses roads, and 35 feet for any railroad crossings. Approximate horizontal and vertical conductor spacing varies by

[7] Guy wires are tensioned wires that are used to maintain tension between structures.
[8] Span guy poles allow guy wires to span additional objects—roads, railroads, water features—located between the anchor point and the supported structure.

pole design. The spacing specifications for each proposed pole can be found in Attachment 3-C: Transmission Pole Typical Drawings.

A more detailed description of the work for each transmission line follows.

Existing 625 Line

SPPCo is proposing to remove the existing single circuit, 60-kV 625 Line in its entirety. This process will involve the removal of approximately 341 existing wood poles and approximately 15 miles of conductor.

New 625 Line

SPPCo is planning to reroute the 625 Line so that its alignment more closely follows the existing roadways in the project area. More specifically, approximately 10 miles of the new 625 Line will be built generally parallel to Mount Watson Road in order to increase access during construction and maintenance activities. The new, single-circuit 625 Line will be constructed to operate at 120 kV, and will require approximately 300 steel poles spaced approximately 300 feet apart. As discussed previously, portions of the new 625 Line will be double-circuited with the 650 and 629 lines.

650 Line

Approximately 10 miles of the existing 650 Line—from MP 0.0 until its new terminus at the Kings Beach Substation—will be rebuilt in place. As discussed previously, the final 0.6 mile of the 650 Line will be double-circuited with the new 625 Line. This section is comprised of approximately 225 poles and 21 span-guy poles. The new, steel poles will be located approximately 10 feet from the current wood pole locations. However, some poles may be situated further than 10 feet from the existing poles, in order to maximize the efficiency of pole placement and avoid sensitive resources or geological constraints. Between approximate MP 6.5 and MP 7.2, the 650 Line will be realigned in order to reduce the number of angle structures, enhance access, and provide additional separation from SR 267. This approximately 0.7-mile-long portion will place the new poles between 80 and 180 feet north of their existing locations. This rebuild effort will upgrade the line from 60 kV to 120 kV and involve the replacement of all of the poles. The distribution circuit and telecommunications/cable lines currently collocated on the 650 Line will be transferred to the new poles. No span-guy poles will be used on the rebuilt line.

Approximately 0.2 mile of the existing 650 Line—from the Truckee Substation to the intersection with the 132 Line—will be removed and the line will be relocated along the existing 132 Line. The five poles that carry the 650 Line circuit to the Truckee Substation also carry a distribution and telecommunications/cable underbuild. The 650 Line conductor will be removed and the five poles will be topped, leaving the underbuilt lines intact and allowing a second distribution circuit to be installed. As a result, no poles will be removed or replaced along this section.

The 0.2-mile-long portion of the existing 650 Line between the Kings Beach Switching Station and Brockway Substation will be removed once the Brockway Substation is decommissioned; the Kings Beach Substation will become the new terminus for the 650 Line. This portion of the

650 Line also carries a distribution and telecommunications/cable underbuild. The 650 Line conductor will be removed and the five poles will be topped, leaving the underbuilt lines intact. As a result, no poles will be removed or replaced along this section.

Northstar Tap/Fold

The project will also include rebuilding an approximately 0.5-mile-long tap into the Northstar Substation—currently constructed at 120 kV, but operated at 60 kV—to a fold that will operate at 120 kV. This upgrade will allow service at the Northstar Substation in the event of an interruption in service on the 650 Line on either side of the substation. Approximately 14 existing wood poles will be replaced with approximately 11 new steel poles to accommodate the upgrade.

The existing Northstar Tap will be used as a shoofly to supply power to the Northstar Substation during construction of the Northstar Fold. The Northstar Fold will be constructed generally parallel to the southern edge of the existing Northstar Tap at a distance of approximately 35 feet. Upon completion of the new Northstar Fold, the existing Northstar Tap will be removed.

132 Line

On the 132 Line, approximately 32 poles will be replaced and the line will be reconfigured to allow a double-circuit configuration with the 650 Line and operation at 120 kV. In general, the new steel poles will be located approximately 10 feet from the current wood pole locations. However, some poles may be situated further than 10 feet from the existing poles in order to maximize the efficiency of pole placement and avoid resource or geological constraints.

3.5.1 Substations

Two substations—the Northstar Substation and Squaw Valley Substation—and one switching station—the North Truckee Switching Station—will be modified to accommodate the new 120-kV loop. One substation—the Tahoe City Substation—will be reconstructed to operate at 120 kV. The Kings Beach Switching Station will be rebuilt into a 120-kV substation, which will be referred to as the Kings Beach Substation. In addition, one substation—Brockway Substation—will be decommissioned. Upon completion of the upgrade, the 650 Line and feeders at the Brockway Substation will be relocated to the Kings Beach Substation. Details of the equipment to be removed and installed at each substation and their uses are provided in Table 3-3: Substation Equipment Details. A description of the modifications and uses for the new substation equipment at each facility follows.

Brockway Substation

The Brockway Substation will be decommissioned and all existing equipment will be removed. Following the removal of all of the substation equipment, a Phase II environmental site assessment for hazardous materials will be conducted to identify the presence of contaminated soils and other potential health hazards. If contamination is present, it will be remediated prior to decompacting the parcel. The parcel will then be graded, as needed, to address stormwater regulations and requirements, after which the parcel will be reseeded with an appropriate seed mixture. Upon completion of the upgrade, the 650 Line and the feeders formerly located at the Brockway Substation will be relocated to the new Kings Beach Substation, which will be located

Table 3-3: Substation Equipment Details

Modifications	Equipment Use
Brockway Substation	
All equipment at the Brockway Substation will be removed during decommissioning of this substation. The site will be reclaimed.	Not Applicable
Northstar Substation	
A new 120/60/14.4-kV transformer will replace an existing out-of-service transformer	A transformer converts voltage from 60/120 kV to 14.4 kV for distribution.
A new 14.4-kV regulator will replace the existing out-of-service regulator	A regulator regulates the low-side voltage to a constant 14.4 kV.
Two new 120-kV circuit breakers will be installed	A circuit breaker senses faults and will automatically interrupt live circuits.
Squaw Valley Substation	
A new 120-kV circuit breaker will be installed	A circuit breaker senses faults and will automatically interrupt live circuits.
A new 120-kV portal will be installed	A portal is a structure that connects the transmission line to the substation bus.
Three new air switches will be installed	An air switch is a manually operated switch used to disconnect and isolate portions of the substation under zero current conditions.
The 120-kV bus will be expanded	The bus is a series of aluminum bars that brings the high-side voltage from one side of the substation to the other.
Tahoe City Substation	
A new 120/60/14.4-kV transformer will be installed	A transformer converts voltage from 60/120 kV to 14.4 kV for distribution.
A new 120-kV bus will be installed	The bus is a series of aluminum bars that brings the high-side voltage from one side of the substation to the other.
Two new 120-kV portals will be installed	A portal is a structure that connects the transmission line to the substation bus.
Two new 120-kV circuit breakers will be installed	A circuit breaker senses faults and will automatically interrupt live circuits.
Two new 120-kV circuit switchers will be installed	Circuit switchers are multipurpose switching and protection devices.
A new 15 kV metal-clad switchgear control enclosure will be installed	The switchgear control enclosure is where all of the low-side (14.4 kV) voltage is connected to the distribution circuits by means of circuit breakers.

Modifications	Equipment Use
11 new air switches—nine 120-kV switches and two 15-kV switches—will be installed	An air switch is a manually operated switch used to disconnect and isolate portions of the substation under zero current conditions.
A new stormwater infiltration trench will be installed	A trench where stormwater collected in the substation is reintroduced into the local shallow groundwater table.
Kings Beach Switching Station/Substation	
Two new 120/60/14.4-kV transformers will be installed	A transformer converts voltage from 60/120 kV to 14.4 kV for distribution.
A new 120-kV bus will be installed	The bus is a series of aluminum bars that brings the high-side voltage from one side of the substation to the other.
Two new 120-kV portals will be installed	A portal is a structure that connects the transmission line to the substation bus.
Two new 120-kV circuit breakers will be installed	A circuit breaker senses faults and will automatically interrupt live circuits.
Two new 120-kV circuit switchers will be installed	Circuit switchers are multipurpose switching and protection devices
A new 15 kV metal-clad switchgear control enclosure will be installed	The switchgear control enclosure is where all of the low-side (14.4 kV) voltage is connected to the distribution circuits by means of circuit breakers.
11 new air switches—nine 120-kV switches and two 15-kV switches—will be installed	An air switch is a manually operated switch used to disconnect and isolate portions of the substation under zero current conditions.
North Truckee Switching Station	
A new 120-kV circuit breaker will be installed	A circuit breaker senses faults and will automatically interrupt live circuits.
A new 120-kV portal will be installed	A portal is a structure that connects the transmission line to the substation buss.
A new air switch will be installed	An air switch is a manually operated switch used to disconnect and isolate portions of the substation under zero current conditions.
The 120-kV bus will be expanded	The bus is a series of aluminum bars that brings the high-side voltage from one side of the substation to the other.

within the existing Kings Beach Diesel Generation Station. All work required to decommission the substation will take place within the existing fence line.

Northstar Substation

The existing Northstar Substation currently operates at 60 kV and serves the increasing electrical demands from the Northstar Area. The substation is currently configured with two transformers—the first, an older, out-of-service 60/14.4 kV model, and the second, a newer 120/60/14.4 kV model, upgraded as part of a previous SPPCo project. To accommodate the upgrade of the existing 60-kV tap, SPPCo will replace the existing out-of-service 60/14.4-kV transformer with a new 120/60/14.4-kV transformer. Once the North Tahoe 120 kV system is completed, both transformers will be tapped at 120 kV and the substation will be operated at 120 kV. In addition, all of the line terminals will be upgraded with new breaker switches. All work will occur within the existing fence line. Attachment 3-D: Substation Plot Plans and Elevation Drawings includes a plot plan and elevation drawing depicting the changes at the Northstar Substation.

Squaw Valley Substation

The Squaw Valley Substation currently has 120/60-kV transformers in place and operates at 60 kV. A new 120-kV breaker assembly will be installed in conjunction with the 120-kV loop so the substation can be switched to operate at 120 kV. All work will occur within the existing fence line. Attachment 3-D: Substation Plot Plans and Elevation Drawings includes a plot plan and elevation drawing depicting the changes at the Squaw Valley Substation.

Tahoe City Substation

The Tahoe City Substation will be rebuilt from 60 kV to 120 kV. Transformer #1, a 60/14.4-kV transformer, will be replaced with a 120/60/14.4-kV transformer, and two new 120-kV breakers will be installed. These new components will be installed within the existing fence line. In order to upgrade the substation and maintain distribution capabilities at the Tahoe City Substation, portable transformers will be required during construction and will be connected to the 625 Line or 629 Line using temporary poles. These transformers will be located on the USFS parcel immediately to the south of the Tahoe City Substation. The portable transformers will be mounted on two trailers, measuring 8 feet wide and 40 feet long. The temporary poles will be similar to the existing 60-kV poles and distribution poles used in the project area. As many as six 60-kV poles and six temporary distribution poles will be required to maintain distribution capabilities. Upon completion of the Tahoe City Substation upgrade, these temporary poles and transformers will be removed and the 625 and 629 lines will be connected to the permanent, new transformers.

A stormwater infiltration trench will also be installed at the Tahoe City Substation. This trench will be 2 feet wide by 20 feet long, approximately 8 feet deep, and backfilled with drainage rock. All stormwater, including stormwater collected by secondary containment basins, will be directed towards the trench either by grading or with pumps and piping. New lighting will also be installed at the Tahoe City Substation, in accordance with the Tahoe Regional Planning Agency's outdoor lighting codes, for use on an as-needed basis. Lighting will consist of one downward directed lamp, utilizing a 500-watt halogen bulb, located at the control building.

Attachment 3-D: Substation Plot Plans and Elevation Drawings includes a plot plan and elevation drawing depicting the changes at the Tahoe City Substation.

Kings Beach Switching Station

Located inside the existing Kings Beach Diesel Generation Facility, the Kings Beach Switching Station is currently comprised of a series of 60-kV oil-filled switches. Upon completion of the 120-kV loop, the switching station will be disassembled and reconstructed as a 120-kV substation, including 120-kV switches and two 120/60/14.4-kV transformers. The new substation will be named the Kings Beach Substation. SPPCo will then extend the four 14.4-kV feeders from the Brockway Substation to the Kings Beach Substation. Attachment 3-D: Substation Plot Plans and Elevation Drawings includes a plot plan and elevation drawing depicting the changes at the Kings Beach Switching Station.

New lighting will be installed at the Kings Beach Substation, in accordance with the Tahoe Regional Planning Agency's outdoor lighting codes. The lighting will be used on an as-needed basis during the operation and maintenance of the substation. Lighting will consist of one downward directed lamp with a 500-watt halogen bulb located at the control building.

The decommissioning of the Brockway Substation will require the installation of four new distribution feeders at the Kings Beach Substation in order to maintain distribution service in the project area. Two distribution feeders will leave the Kings Beach Substation heading south via two underground duct packages, totaling approximately 1,900 feet in length. The feeders will be installed within the access road for the Kings Beach Substation and will continue within Deer Street until the intersection with Speckled Street. At this point, one of the feeders will head east, intersecting an existing distribution pole at the northeast corner of Deer Street and Speckled Street. The second feeder will continue south, crossing Speckled Street until the intersection with Cut Throat Avenue. At this point, the feeder will head west within Cut Throat Avenue until intersecting an existing distribution pole. The remaining two distribution feeders will also exit the substation underground and travel west to a point approximately 25 feet beyond the fence line where they will intersect with the existing 650 Line poles that lead to the Brockway Substation. As described previously, these poles will be topped, leaving the distribution circuit intact. New risers will be installed at the termination of the underground portions of these four feeders to facilitate the conversion to an aboveground facility.

These underground distribution facilities will be installed in a duct bank comprised of two 6-inch-diameter polyvinylchloride (PVC) conduits. Approximately seven underground splice vaults measuring approximately 12 feet long, 6 feet wide, and 8 feet deep will be installed in line with the duct bank to facilitate pulling the conductor during construction and access during inspection and maintenance activities. Typical drawings of the proposed underground duct bank, riser, and underground splice vault have been included as Figure 3–5: Proposed Typical Underground Distribution Duct Bank, Figure 3–6: Proposed 14.4-kV Typical Riser, and Figure 3–7: Proposed Typical Underground Splice Vault, respectively.

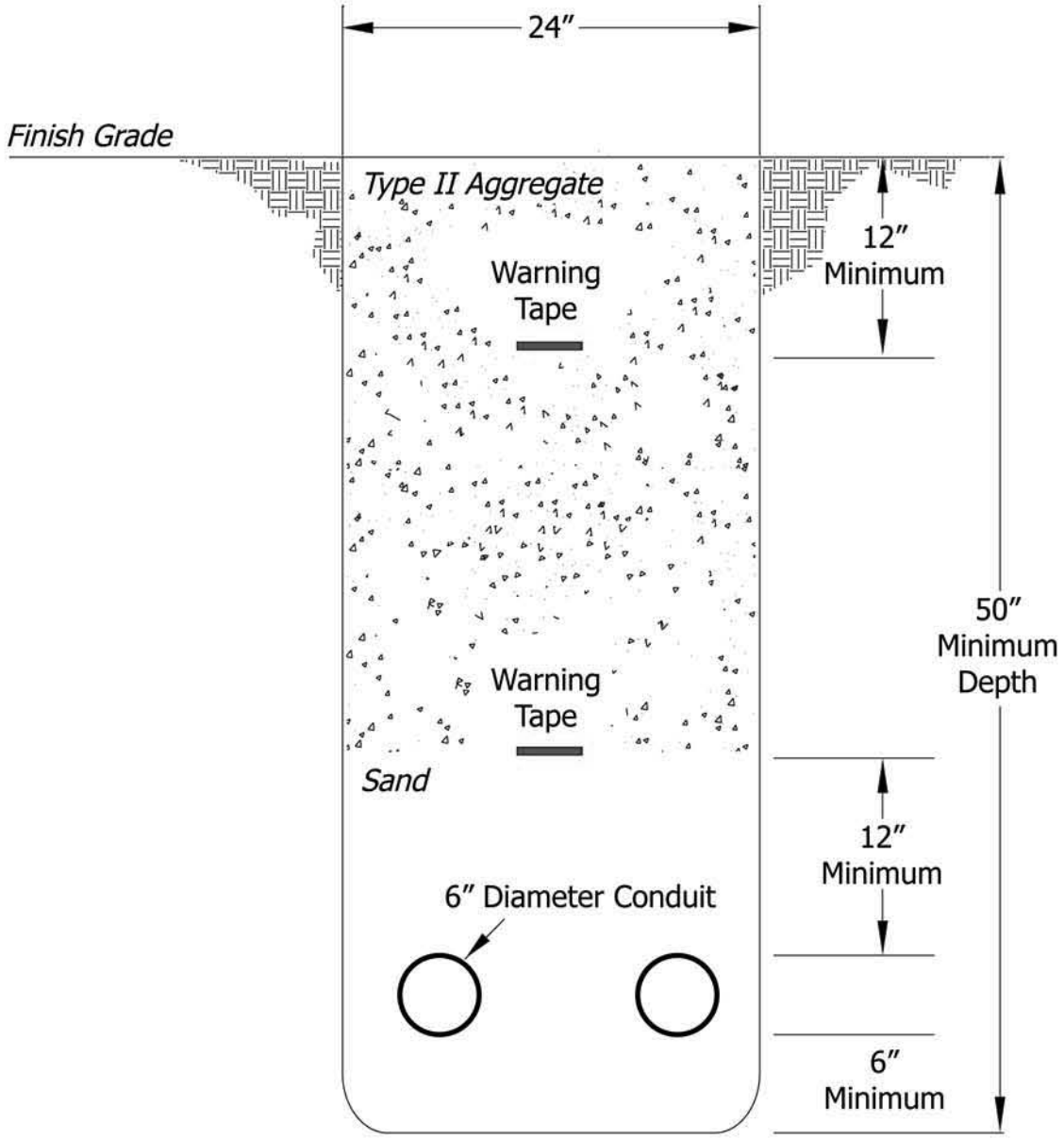

Sierra Pacific™

Figure 3-5: Proposed Typical Underground Distribution Duct Bank

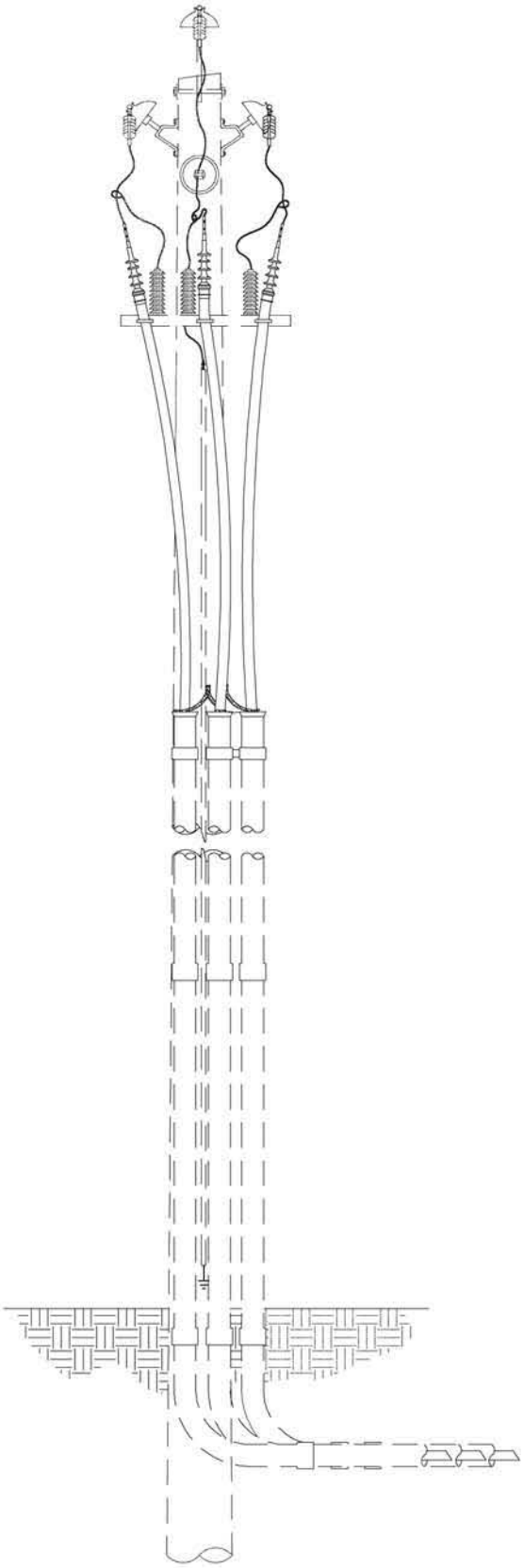

Sierra Pacific™

Figure 3-6: Proposed 14.4-kV Typical Riser

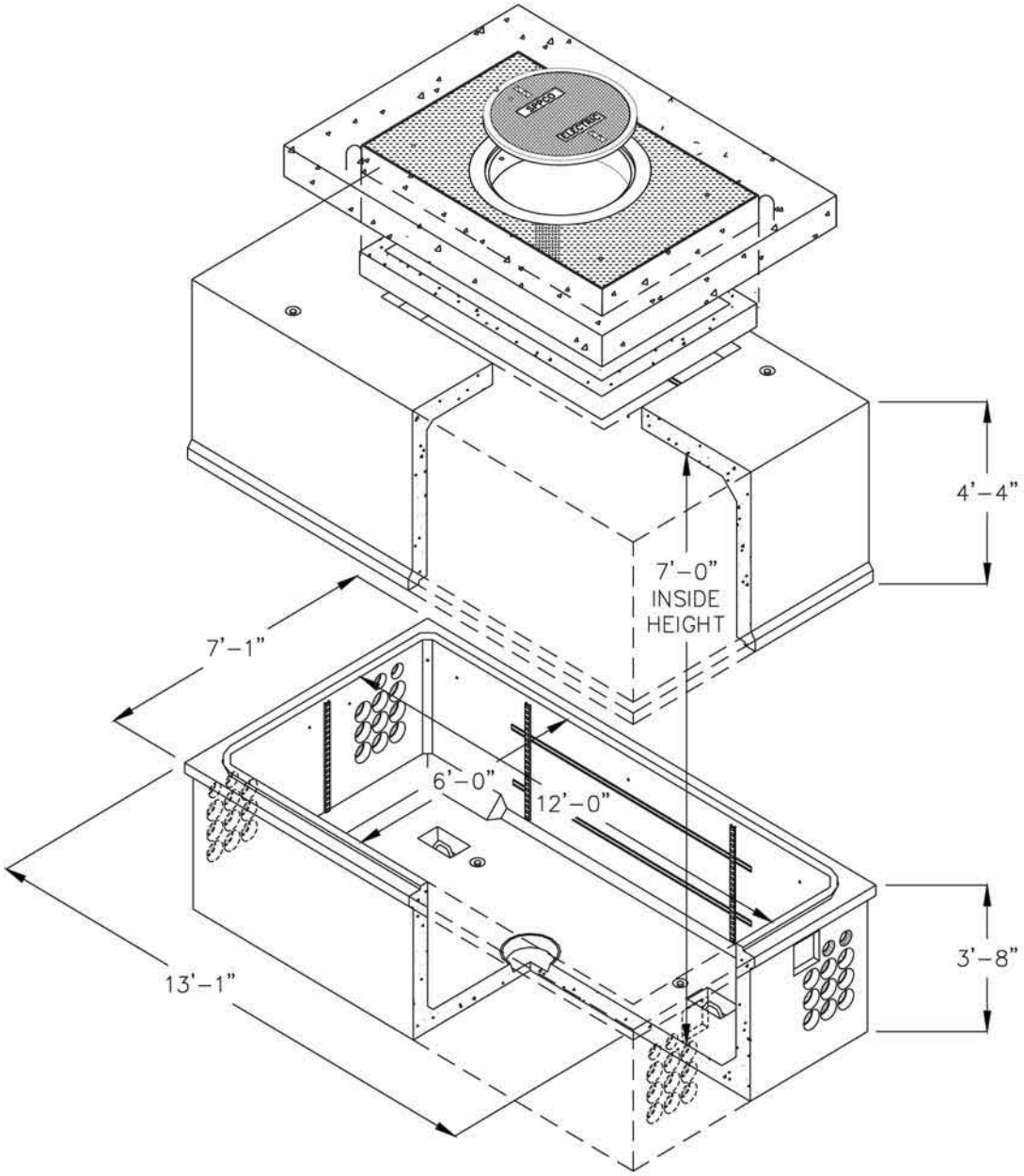

Sierra Pacific™

Figure 3-7: Proposed Typical Underground Splice Vault

Truckee Substation and North Truckee Switching Station

The Truckee Substation is a 60-kV substation from which the 650 Line originates. Once the transmission loop has been upgraded, the newly rebuilt 650 Line will tap directly into the North Truckee Switching Station via a new, approximately 30-pole-long double-circuit rebuild with the 132 Line, and a new 120-kV terminal and breaker. Attachment 3-D: Substation Plot Plans and Elevation Drawings includes a plot plan and elevation drawing depicting the changes at the North Truckee Switching Station.

3.5.2 Electrical Need Area

The substations that will be modified as a part of this project serve the distribution area shown in Figure 3–1: Project Location Map, less the area served by the Truckee-Donner Public Utility District.[9]

3.6 RIGHT-OF-WAY REQUIREMENTS

3.6.0 Temporary

To accommodate construction, temporary ROWs will be established for the new 625 Line, 650 Line, Northstar Fold, and 132 Line. The temporary ROW requirements for construction of the project have been summarized in Table 3-4: Temporary ROW Requirements. All disturbance created outside of the existing easement will be temporary and restored to its original condition following construction, unless otherwise requested by the landowner or land management agency.

Table 3-4: Temporary ROW Requirements

Line	Approximate Length (miles)	Approximate Width (feet)	Approximate Area (acres)
Existing 625 Line	0	0	0
New 625	16	65	126.1
650	10	65	78.8
Northstar Fold	0.5	65	3.9
132/650 Line Double-Circuit	1.6	65	12.6
Total	**--**	**--**	**221.4**

Note: With the exception of the identified stringing sites, no temporary ROW for workspace or travel routes will be required for the removal of the line outside of the existing 625 Line's 40-foot-wide permanent easement.

[9] The Truckee Donner Public Utility District serves electric customers in the downtown Truckee area, Gateway, Meadow Park, the Armstrong and Biltz Tracts, Donner Lake, Tahoe Donner, Sierra Meadows, Ponderosa Palisades, Ponderosa Ranchos, Prosser Heights, Prosser Lakeview, Sugar Pine Estates, Olympic Heights and portions of Glenshire.

3.6.1 Permanent

SPPCo currently holds easements from the USFS, Placer County, and various private landowners whose properties are crossed by the existing 650 Line, 132 Line, and Northstar Fold. The widths of the existing easements on these lands vary, but on average are approximately 30 feet. The Northstar Fold's easement expands from approximately 40 feet to 95 feet between the last pole and the Northstar Substation due to the divergence of the separate circuits. These easements will be improved for the 650 Line and maintained for the 132 Line and Northstar Fold. After project construction has been completed, SPPCo will negotiate with the existing landowners in order to obtain a permanent easement of 40 feet for the new 625 Line and 650 Line for operation and maintenance purposes.

The new and upgraded equipment at the substation and switching station facilities will be located within SPPCo's existing property; therefore, no additional permanent land requirements will be necessary.

3.7 CONSTRUCTION

This section describes the required access, anticipated temporary workspace requirements, and methods that will be employed to construct the project components.

3.7.0 Staging Areas

In order to stage construction equipment and material, SPPCo is proposing to use seven staging areas. Staging areas have generally been situated in areas with pre-existing soil disturbance; however, some sites may require minimal vegetation removal and grading. One 5.5-kW diesel-powered generator may be temporarily installed at one of these staging areas to provide power on an as-needed basis. Temporary chain-link fencing will be installed around the perimeter of the staging areas and security personnel will monitor each staging area as needed. During each phase of construction, one of the staging areas will also house office trailers to support the construction crew. These staging areas are depicted in Figure 3–1: Project Location Map and Attachment 3-A: Detailed Route Maps, summarized in Table 3-5: Staging Area Summary, and described in the following subsections.

Joerger Road

The Joerger Road Staging Area will be located off of an existing dead-end paved road and will be accessed using Joerger Road. This approximately 600-foot by 200-foot staging area will be used as a material staging area and a helicopter landing, storage, and refueling area. It will be located in a flat area where the vegetation generally consists of low shrubs including big sagebrush (*Artemisia tridentata*), bitterbrush (*Purshia tridentata*), and low sage (*Artemisia arbuscula*). The surrounding area is scattered with Jeffrey pines (*Pinus jeffreyi*), typically under 10 feet in height. In order to prepare this staging area, vegetation will be cleared and a temporary fence will be installed around its perimeter.

Table 3-5: Staging Area Summary

Staging Area	Purpose	Required Improvements	Approximate Dimensions (feet)	Approximate Area (acres)
Joerger Road	Material storage and helicopter landing, storage, and refueling	Vegetation clearing and temporary construction fencing installed	600 by 200	2.8
Northstar Golf Course	Material and equipment storage and staging	Vegetation clearing, minor road improvements, and temporary construction fencing installed	300 by 300	2.1
Kings Beach	Material and equipment storage and staging	Vegetation clearing, tree removal, road improvements, and temporary construction fencing installed	300 by 300	2.1
Sawmill Flats	Material and equipment storage and staging and logging activities	Temporary construction fencing installed	500 by 260	3.0
Former Batch Plant	Material and equipment storage and staging and logging activities	Vegetation clearing, tree removal, and temporary construction fencing installed	120 by 80	0.2
Fiberboard Highway	Material and equipment storage and staging and logging activities	Vegetation clearing, tree removal, and temporary construction fencing installed	200 by 100	0.5
Tahoe City	Helicopter landing and material and equipment storage and staging	Temporary construction fencing installed	600 by 250	3.4
Total				**14.1**

Northstar Golf Course

The Northstar Golf Course Staging Area is located just north of where SR 267 passes by the Northstar Golf Course, and is accessed by a dirt road located approximately 1.4 miles southeast of Martis Creek Road. This location will measure approximately 300 feet by 300 feet, and the surrounding area's primary vegetation type differs on the eastern and western sides of the small access road from SR 267. To the west of the access road, the primary vegetation types include big sagebrush, low sage, lupine (*Lupinus* spp.), buckwheat (Eriogonum spp.), and Plumas ivesia (*Ivesia sericoleuca*). To the east of the access road, the primary vegetation types include those more typical of wet meadow habitat, including bentgrass (*Agrostis* spp.) and sedges (*Carex* spp.), with scattered low sage. In order to prepare this staging area, vegetation will be cleared and minor improvements will be made to the access road.

Kings Beach

The Kings Beach Staging Area is located just north of the Kings Beach Switching Station and is accessed using an existing dirt access road located at the end of Canterbury Drive. This staging area will be used for material storage and equipment staging. This location was formerly used as a landfill and as a result, has a previously disturbed area that measures approximately 300 feet by 300 feet. Activity at this location will be restricted to this previously disturbed area. The vegetation within the planned staging area mainly consists of bunch grasses and scattered Jeffrey pines under 10 feet in height. In order to prepare this staging area, minor improvements to the access road—including the removal of approximately 10 trees—will be required and a temporary fence will be installed around its perimeter.

Sawmill Flats

The Sawmill Flats Staging Area is located approximately 0.4 mile north of the new 625 Line near MP 6.2 and is accessed by an existing dirt road from Mount Watson Road. This staging area will be used to store and stage material and equipment, and may also be used for logging activities related to the project. This approximately 500-foot by 260-foot area is previously disturbed and denuded. The surrounding area's primary vegetation type is mixed conifer forest. No improvements will be required to prepare this staging area for use.

Former Batch Plant

The Former Batch Plant Staging Area is located approximately 300 feet north of the new 625 Line near MP 9.3 and is accessed from Mt. Watson Road. This staging area will be used to store and stage material and equipment, and may also be used for logging activities related to the project. This approximately 120-foot by 80-foot area is previously disturbed and has little natural vegetation directly within the staging area. The surrounding area's primary vegetation type is red fir (*Abies magnifica*) forest. Vegetation and brush present will be cleared and approximately 30 trees will be removed to prepare this staging area for use.

Fiberboard Highway

The Fiberboard Highway Staging Area is located approximately 200 feet east of the new 625 Line near MP 12.8 and is accessed from Mount Watson Road. This staging area will be used to store and stage material and equipment, and for logging operations related to the project. This

approximately 200-foot by 100-foot area is previously disturbed but has some vegetative cover. The vegetation on site is dominated by mountain whitethorn (*Ceanothus cordulatus*) with scattered pines. Vegetation and brush will be cleared and approximately five trees will be removed to prepare this staging area for use.

Tahoe City

The Tahoe City Staging Area is located approximately 1 mile north of the Tahoe City Substation and is accessed by an existing dirt access road from Jackpine Street in Tahoe City. This staging area will be used as a helicopter landing zone and for material storage and staging. This approximately 600-foot by 250-foot area is previously disturbed and covered in gravel. The surrounding area's primary vegetation type is mixed conifer woodland. SPPCo has recently used the site as a staging area and helicopter landing zone for a nearby project along SR 89. No improvements will be required to prepare this staging area for use.

3.7.1 Work Areas

Transmission line construction will require the use of various temporary work areas, including pole work areas and crossing structure areas. In addition, construction at the Tahoe City Substation will require a temporary work area outside of the existing fence line on an adjacent USFS-owned parcel. Some vegetation removal and blading may be required to accommodate equipment and material, and to provide level areas to ensure safe equipment operation at these locations. Where topsoil is present, it will be salvaged from areas to be bladed whenever possible. Following construction, each work site will be restored to preconstruction conditions to the extent practical, and revegetated. These anticipated workspace requirements are described in detail in the following subsections, and are summarized in Table 3-6: Temporary Workspace Requirements. The locations of these workspaces are depicted in Attachment 3-A: Detailed Route Maps.

Pole Work Areas

To accommodate construction equipment and activities, work areas surrounding each pole location will be cleared of vegetation and graded as necessary to provide a safe work area. Each of the approximately 218 angle poles will require an approximately 0.5-acre work area measuring approximately 65 feet by 335 feet; each of the approximately 371 tangent poles will require an approximately 0.25-acre work area measuring approximately 65 feet by 170 feet. A total of approximately 291.5 acres of temporary disturbance will be required to facilitate pole installation. Pole work areas will typically be accessed by truck using existing access roads or new spur roads[10] and the transmission line ROW. In areas where the terrain is too rugged for truck access, crews will use all-terrain vehicles or will hike in by foot to access the pole sites.

An additional temporary work area may be required in instances where anchors will be installed outside of the temporary ROW. In these instances, a work area up to 15 feet wide and 50 feet long, extending from the ROW to the anchor location, will be established to provide access for the construction equipment and crew.

[10] Spur roads are short access routes that connect existing access roads to specific areas of construction.

Table 3-6: Temporary Workspace Requirements

Project Component	Workspace Description[11]	Quantity	Required Improvements	Approximate Dimensions/Size per Site	Approximate Area (acres)
Existing 625 Line	Tangent Pole Work Areas	182	Grading and vegetation clearing	0.25 acre	45.5
	Angle Pole Work Areas	159		0.5 acre	79.5
	Crossing Structures	4	Excavation, and vegetation clearing	0.25 acre	1.0
	Stringing Sites[12]	22	Vegetation clearing	Partial 300-foot-diameter circles	35.7
New 625 Line	Tangent Pole Work Areas	283	Excavation, grading, and vegetation clearing	0.25 acre	70.75
	Angle Pole Work Areas	17		0.5 acre	8.5
	Crossing Structures[13]	4	Excavation, and vegetation clearing	0.25 acre	1.0
	Stringing Sites	30	Grading and vegetation clearing	Partial 300-foot-diameter circles	48.7
650 Line	Tangent Pole Work Areas	157	Excavation, grading, and vegetation clearing	0.25 acre	39.25
	Angle Pole Work Areas	68		0.5 acre	34.0
	Crossing Structures	2	Excavation, and vegetation clearing	0.25 acre	0.5

[11] Additional work areas to accommodate the installation of anchors and guy wires outside of the temporary ROW may be required. These work areas will be approximately 15 feet wide and may extend up to 50 feet from the edge of the temporary ROW. The location and quantity of anchors that will be installed outside of the temporary ROW will not be determined until the final engineering phase of the project. As a result, they have not been included in this table.

[12] With the exception of the identified stringing sites, no temporary ROW for workspace or travel routes will be required outside of the existing 625 Line's 40-foot-wide easement.

[13] Crossing structures for the new and existing 625 lines will be installed in the same locations; therefore, the acreage associated with these work sites has only been accounted for once.

Project Component	Workspace Description[11]	Quantity	Required Improvements	Approximate Dimensions/Size per Site	Approximate Area (acres)
650 Line (cont.)	Stringing Sites	18	Grading and vegetation clearing	Partial 300-foot-diameter circles	29.2
Northstar Fold	Tangent Pole Work Areas	8	Excavation, grading, and vegetation clearing	0.25 acre	2.0
	Angle Pole Work Areas	6		0.5 acre	3.0
	Crossing Structures	2	Excavation, and vegetation clearing	0.25 acre	0.5
	Stringing Sites	2	Grading and vegetation clearing	Partial 300-foot-diameter circles	3.2
132/650 Line Double-Circuit	Tangent Pole Work Areas	24	Excavation, grading, and vegetation clearing	0.25 acre	6.0
	Angle Pole Work Areas	6		0.5 acre	3.0
	Crossing Structures	8	Excavation, and vegetation clearing	0.25 acre	4.0
	Stringing Sites	6	Grading and vegetation clearing	Partial 300-foot-diameter circles	9.7
Tahoe City Substation	Temporary Transformer Location, Pole Work Areas, Crossing Structures	1	Grading, excavation, and vegetation clearing	1 acre	1.0
Total					**426.0**

Note: Portions of the temporary construction ROW will be used for overland access from access and spur roads to individual pole work areas

Crossing Structures

The installation and removal of the conductors will involve the use of several crossing structures[14] to protect roadways and existing utilities crossed by the transmission lines. An approximately 0.25 acre temporary workspace will be cleared of vegetation at each crossing structure location prior to installation. Crossing structure locations will be accessed in a similar manner to the pole work areas.

3.7.2 Access and Spur Roads

Transmission Lines

The transmission line ROW will primarily be accessed through the use of existing paved and dirt access roads, which vary in width from approximately 8 to 10 feet. Approximately six new spur roads, ranging between 40 feet and 1,790 feet in length, will also be established to facilitate access from existing roads to the transmission lines' ROWs. These access and spur roads are depicted in Attachment 3-A: Detailed Route Maps and summarized in Table 3-7: New Spur Road Summary. Where the terrain allows, the individual pole work areas and stringing sites will be accessed using a centerline travel route that will be routed within the transmission line ROW.

Table 3-7: New Spur Road Summary

Number	Length (feet)	Component Accessed
1	110.3	650 Line
2	67.1	New 625 Line
3	1,791.2	New 625 Line
4	41.3	New 625 Line
5	103.3	New 625 Line
6	81.3	New 625 Line

Access roads requiring improvement will be graded generally level and will generally be 12 feet wide for straight sections and up to 25 feet wide at curves to safely allow the movement of construction equipment and vehicles to each site. Equipment typically used for the improvement of access roads is listed in Table 3-8: Access Road Construction Equipment. In areas of steep terrain, the access roads may be leveled to two tiers to minimize the amount of material removed.

Typically, each access road requiring improvement will first be cleared of vegetation and graded generally level by a bulldozer. A motor grader will then level the road in accordance with the engineered specifications. In areas of very rough terrain, vegetation removal will be limited to brush clearing to allow for safe access by all-terrain vehicles. The centerline travel route within the ROW will be limited to overland travel and no additional grading is expected.

[14] Crossing structures consist of wood poles with netting strung between them. The structures are placed over overhead utilities and roadways at crossings to protect them when pulling the cable onto the new structures.

Table 3-8: Access Road Construction Equipment

Equipment Type	Activity	Approximate Number
Bulldozer	Clearing and grading	6
Dump truck	Transport soil/fill on and off site	2
Excavator	Removal of soil and brush	4
Front-end loader	Transportation of soil and fill	2
Motor grader	Grade and level	2
Compactor	Soil compaction	1
Water truck	Soil compaction and dust control	6

Gravel may be applied where dirt access roads intersect paved public roads to minimize the potential for dirt and mud being tracked onto public roadways. Gravel may also be applied to access roads in order to minimize rutting. A summary of the types of access roads that will be used is provided in Table 3-9: Project Access Roads. These access roads are depicted in Attachment 3-A: Detailed Route Maps.

In areas where access roads need to be improved or where spur roads will be constructed, SPPCo will implement best management practices (BMPs) concurrently with the roadwork. The temporary access roads that have been improved will be returned to preconstruction contours and widths upon the completion of construction. Table 3-10: Truck Trip Requirements provides the estimated number of vehicle trips associated with each project component.

Substations and Switching Stations

The substations and switching stations will be accessed via existing access roads or public roadways. No new access roads will be required for the proposed construction activities at these facilities.

3.7.3 Helicopter Access

SPPCo is proposing to remove the existing 625 Line by helicopter if overland access is not feasible. In addition, SPPCo plans to utilize helicopters to deliver and remove construction material from areas with rugged terrain where ground access will not safely accommodate the required construction equipment and vehicles.[15] These areas will be identified by the contractor once they have been selected to construct the project.

[15] The analysis within Section 4.3 Air Quality and Section 4.10 Noise includes the use of helicopters for up to 14 eight-hour days.

Table 3-9: Project Access Roads

Type of Road	Description	Approximate Length of Roads (miles)	Approximate Area of New Temporary Disturbance (acres)
Existing Dirt Road	Existing dirt roads will not require any improvement or ground disturbance.	17.3	0.0
Existing Dirt Roads Needing Improvement	Existing dirt access roads may be improved and widened to between 12 and 25 feet in some areas. Some grading and vegetation clearing may be required.	4.7	8.5
New Temporary Spur Road	New roads will be built from access roads to pole locations. These 12-foot-wide roads may require grading and vegetation clearing. These roads will be reclaimed upon the completion of construction.	0.4	0.6
Existing Paved Road	Existing paved roads will not require any improvement or ground disturbance.	32.6	0.0
Total		**55.0**	**9.1**

Note: Disturbance calculations for existing dirt roads needing improvement are based upon vegetation and brush clearing at an average width of 15 feet.

Table 3-10: Truck Trip Requirements

Component	Approximate Number of Trips
625 Line Removal	1,260
625 Line Installation	8,270
650 Line Rebuild	5,990
Northstar Fold Rebuild	630
132/650 Line Double-Circuit	580
Substation Modifications	4,640
Total	**21,370**

Two helicopter landing zones will be utilized to construct the project, as depicted in Attachment 3-A: Detailed Route Maps and described previously in Section 3.7.0 Staging Areas. One landing zone will be located at the Joerger Road Staging Area. The helicopters will be stored at this location overnight and refueled at this site. The second landing zone will be located at the Tahoe City Staging Area located near the end of Jackpine Street, just north of Tahoe City. This site will be used for both helicopter landing and for equipment and material storage. Both landing zones will be accessed using existing paved and dirt access roads. Because these landing zones will be located in previously disturbed areas, no additional grading will be required. However, some vegetation clearing may be conducted to provide a safe operating environment. BMPs to reduce impacts to sensitive noise or air receptors are presented in Section 3.10 Applicant-Proposed Measures.

A Kaman K35 or similarly equipped helicopter will be used for tree removal and material delivery activities. Helicopters will typically be used between 6:30 a.m. and 4:00 p.m., or as allowed by local noise restrictions, to deliver poles, construction materials, and fill, to the ROW. Helicopters may also be used to remove materials and spoil from the ROW. The helicopters' flight paths will follow the ROW to the extent practical and will be coordinated with the Federal Aviation Administration (FAA) and with the USFS-LTBMU. A "no-fly" zone may be enforced over USFS designated Protected Activity Areas during breeding season (May 1 to August 15).

3.7.4 Vegetation Clearing

Brush Clearing

In order to prepare the ROW and work areas for construction activities, approximately 365.7 acres of existing native vegetation will need to be cleared. Mowers, excavators, front-end loaders, and bulldozers will be used to clear these sites. During clearing activities, vegetation will be mowed or grubbed, leaving root systems intact wherever possible to encourage resprouting and minimize erosion. Brush and shrubs that must be removed will be placed at the edge of the ROW or moved to an approved staging area. During reclamation activities, salvaged brush may be respread in disturbed areas after seeding to encourage revegetation, where approved by landowner and agency agreements.

Tree Removal

All trees within the existing and new ROWs will be felled and delimbed within the ROW, skidded to the nearest access road, and loaded onto trailers for further processing (reduced in size or chipped) at the logging area located at the Fiberboard Highway Staging Area. Minor tree removal is anticipated for removal of the existing 625 Line. Chain-saws and other mechanized tree clearing equipment will be used to fell and delimb trees. Log loaders, log trailers, chippers, and chip vans will be used to transport and process cleared trees. Processed trees will be transported to the Sierra Pacific Industries (SPI) mill located in Lincoln, California. Excess slash will be chipped and either stored on the ROW to be respread during reclamation, or blown into trucks where it will be transported to the SPI cogeneration plant in Loyalton, California. Wood chips may also be spread out in disturbed areas for erosion control purposes to a maximum depth of 3 inches.

The most common tree species that will be removed are white fir (*Abies concolor*), red fir, Jeffrey pine, sugar pine (*Pinus lambertiana*), lodgepole pine (*Pinus contorta*), western white pine (*Pinus monticola*), incense-cedar (*Calocedrus decurrens*), and ponderosa pine (*Pinus ponderosa*). Stands of trees within the ROWs tend to be even-aged due to previous wildfires and logging efforts in the area. The most mature trees are between 60 feet and 100 feet tall, though smaller saplings and young trees are scattered throughout. There are very few old-growth trees within the ROW or the temporary work areas.

In addition to trees within the ROW, trees deemed to be "hazard trees," which are located outside of the ROW but have the potential to fall and damage the transmission lines, will also be removed. Where hazard trees are located outside of the temporary ROW, additional workspace will be obtained to access the tree removal locations. Sections 12 through 18 of the Power Line Fire Prevention Field Guide (field guide) will be used to determine what constitutes hazard trees and the techniques used to determine any additional hazards. In addition to the removal of hazard trees, all tree limbs within 10 feet of the outside conductor will be trimmed in accordance with General Order 95D.

All tree removal activities on USFS-managed land, including the felling and skidding of trees, will be performed in accordance with the Timber Sale Contract to be established with the USFS. This contract will include details about the tree removal activities, including which trees will be removed, the price paid for the trees, and timeframe for the forestry activities. All tree removal activities, regardless of location, will be performed in accordance with the Applicant Proposed Measures (APMs) included in Table 3-17: Applicant-Proposed Measures. Trees removed from areas without suitable access to Mount Watson Road will be flown to a processing/landing area located on the same side of SR 267 on which the trees were felled. The Kings Beach Staging Area may be a suitable location for this activity, as well as the Fiberboard Highway Staging Area(s).

3.7.5 Erosion and Sediment Control and Pollution Prevention

A Stormwater Pollution Prevention Plan (SWPPP) will be created as part of the project. This plan will detail the BMPs that will be implemented to minimize erosion, reduce sediment transport, and control stormwater flow from the project area. In addition, the SWPPP will generally describe the terrain type and slope at temporary construction areas, and will address grading and slope stabilization methods, as well as construction waste disposal methods. Table 3-6: Temporary Workspace Requirements summarizes the total area that will be disturbed by project construction.

3.7.6 Transmission Line Construction Methods

This section includes an overview of the typical methods used for removing and installing electrical transmission poles and conductors.

Grounding

Temporary personal protection grounds will be installed near the base of each pole whenever work will be conducted on site and near an energized conductor. Ground rods (copper rods that are 5/8-inch in diameter) will be driven deep enough to reach firm ground. Approximately 1 foot

of the rod will protrude above ground level during construction. Grounding equipment will be connected to these ground rods during construction hours and be disconnected when the line is restored to service. The ground rods will remain in the ground throughout construction and will be removed when project activities are complete. Ground rods will also be used for the reel puller, tensioner trucks, and any equipment operating near an energized conductor.

Stringing Site Preparation

Up to 65 stringing sites will be required during the removal and installation of the conductors. In general, stringing sites will be approximately 300 feet in diameter and will be spaced at a distance between approximately 500 feet and approximately 8,000 feet apart. On average, they will be located approximately 2,500 feet apart. The location of these stringing sites varies due to the terrain and surface conditions along the ROW, as well as the placement of angle structures. The stringing sites are depicted in Attachment 3-A: Detailed Route Maps. Stringing sites will require a relatively flat surface; therefore, they will need to be cleared and may need to be graded to allow for safe equipment operation. Site preparation will require heavy equipment for removing obstacles (e.g., large rocks, trees, brush). Vegetation will be removed, as necessary, to provide safe and efficient work areas. Mowing or grubbing is the preferred method for clearing vegetation.

A puller and tensioner and a semi tractor-trailer equipped with a conductor reel will be located at each stringing site. The semi tractor-trailer will be equipped with a specialized trailer with conductor reels that will be used to deliver new conductor to the site for installation, or to collect and remove old conductor from the site. The puller and tensioner will be used to string the conductor from one stringing site to the next.

Approximately 22 stringing sites will be placed along the existing 625 Line alignment to facilitate the removal of the existing conductor. The stringing sites are depicted on Attachment 3-A: Detailed Route Maps. Removal of the conductor in these areas will be conducted using bucket trucks. Helicopters may also be used in areas where existing access is not adequate and overland access is not practical. These stringing sites will be approximately 300 feet in diameter and will be cleared to allow the use of the previously described pulling and tensioning equipment.

Pole Removal

Following installation of the new steel poles and removal of the conductor, the hardware on the old poles will be dismantled using cranes and bucket trucks. The old poles will then be cut off at ground level and transported off site by truck for disposal at an approved facility. Crews will use existing access roads, new spur roads, and the transmission line ROW to access pole work areas by truck. In areas where the terrain is too rugged for truck access, crews will use all-terrain vehicles or will hike in on foot to access the poles.

In areas with rough terrain or limited access, the poles will be cut off at ground level and transported to the nearest suitable staging area by helicopter. The poles will then be chipped, loaded onto trucks, and taken to the SPI cogeneration plant in Loyalton, California. Poles that are treated, or otherwise unacceptable to the cogeneration plant, will be disposed of at U.S. Ecology's hazardous waste treatment and disposal site located in Beatty, NV. The existing pole

work areas will then be restored, if necessary, as described in Section 3.7.7 Cleanup and Post-Construction Restoration.

The 10 poles along the 650 Line to be removed that are depicted in Figure 3–1: Project Location Map also carry a distribution underbuild. Along these two portions of the line, the 650 Line conductor will be removed and the poles will be topped, leaving the existing distribution lines intact. As previously described, topping a pole involves removing the existing transmission conductor, disassembling the hardware associated with the transmission circuit, and trimming the pole to leave the distribution line underbuild in place.

Pole Installation

Excavation

Prior to excavation, topsoil will be salvaged from the area to be excavated and any areas that will be used for spoil storage. Topsoil will be stored adjacent to the pole, kept separate from spoil material, and respread following pole installation to facilitate revegetation of the work site. Pole installation will begin by preparing a hole by auger or track-mounted backhoe, approximately 3 feet in diameter, in which the new pole will be buried. The depth of the hole will be determined by the height of the pole. As a general rule, 10 percent of the pole height plus 2 additional feet are buried below ground. The poles will range in height from approximately 50 to 80 feet, requiring holes between 7 and 10 feet deep. Where self-supporting steel poles will be used, larger holes between 6 and 8 feet in diameter and 20 to 30 feet deep will be excavated, and concrete foundations will be poured. The permanent footprint of angle and tangent poles will be approximately 2 square feet, while the total permanent footprint of self-supporting structures will be approximately 50.2 square feet and will displace up to 55.9 cubic yards (CY) of soil. Soundless chemical demolition agents[16] may be required in rocky areas where normal excavation methods are unable to meet project excavation specifications. As a safety precaution, excavations will be covered, flagged, or temporarily fenced during periods of inactivity. Up to 1 CY of soil will be mounded around the base of the newly installed poles. Any remaining excavated spoil will be removed from the ROW by dump truck and stored at the staging areas. Excess spoil not used for backfilling or restoration efforts will be removed from the project site and sent to an approved landfill for reuse or disposal.

Additionally, holes for guy wire anchors will be excavated at pole sites, where required. The anchor is a 2-foot-diameter disk attached to a steel rod with an eye at the top. The disk is welded at an angle to the rod, requiring only a 2-foot-diameter hole between 4 and 8 feet deep. Anchors are typically located at a distance equal to the total pole height away from the pole's base. After installation, each anchor will be compacted and tested using a large bulldozer and winch lines, or with specific anchor testing equipment. Attachment 3-B: Transmission Pole Summary provides a list of poles where anchors will be installed.

[16] Soundless chemical demolition agents are used to assist with the excavation of large rocks or boulders where the use of explosives is not practical or feasible. This technique—also called chemical cracking or breaking—begins with boring multiple 1-inch-diameter holes in the rock to be excavated. These holes are then filled with a powdery chemical that, when mixed with water in the appropriate quantity, expands significantly. This expansion cracks the rock, breaking it into pieces that can be easily removed. When excavating larger rocks, this process may need to be repeated multiple times to reduce the size of the rock.

An additional temporary work area will be required for each anchor being installed outside of the temporary ROW. In these instances, a 15-foot by 50-foot work area, extending from the ROW to the anchor location, will be established to provide access for the track-mounted equipment. Disturbance will include vegetation removal, rock and downed tree relocation, and overland travel. To facilitate the installation of the anchor, an approximately 4-foot by 6-foot area surrounding the anchor location will be cleared of existing brush. A track-mounted backhoe will then be used to excavate a 2-foot-diameter hole, and the excavated soil stockpiled for backfilling after the anchor installation is completed. It is anticipated that all of the soil removed from the hole will be used for backfill, unless it is deemed unsuitable, at which point it will be hauled off site.

Assembly and Erection

Once excavation activities for the poles are underway, materials, including poles, insulators, and hardware, will be delivered to the site, assembled, and attached to the new poles to form a complete unit. If poles will be installed using helicopters, they will be assembled at one of the seven staging areas prior to delivery to the ROW. The assembled poles will then be placed into the excavated holes using cranes. Direct-buried poles will be buried in the ground, and native soil will be used to fill the holes (imported soil will be used if native material is unsuitable for compaction). Up to 1 CY of soil will be mounded around the base of the newly installed poles. Self-supporting steel poles will be placed onto concrete foundations using cranes and will be secured using the appropriate hardware.

Helicopters may be used to deliver material to the ROW and install poles, as necessary, in areas of rough terrain or in areas otherwise inaccessible to ground crews and other construction equipment. Poles to be placed by helicopters will be assembled at the helicopter landing zone, transported, and placed in the excavated holes with assistance from ground crews.

Conductor Removal and Installation

The following steps describe the construction techniques utilized when removing and installing conductor. Figure 3–8: Conductor Installation depicts a graphical representation of the conductor installation process.

Temporary Crossing Structure Installation

Prior to conductor removal or installation, temporary crossing structures, constructed of wood poles and netting, will be installed at road crossings and/or other locations where the conductor could come into contact with existing electrical or communications facilities or vehicular and/or pedestrian traffic (for example, SR 267 and SR 89) in the event the line accidentally falls. An auger or backhoe will excavate the holes in which the crossing structures will be installed and a crane will lift the structures into place. The total temporary disturbance associated with the installation and removal of each crossing structure is approximately 0.25 acre (100 feet by 100 feet). The temporary crossing structures will be removed after the completion of conductor stringing, and the holes will be backfilled with excavated soils.

Alternatively, flaggers may temporarily hold traffic during stringing activities and reconductoring work at road crossings.

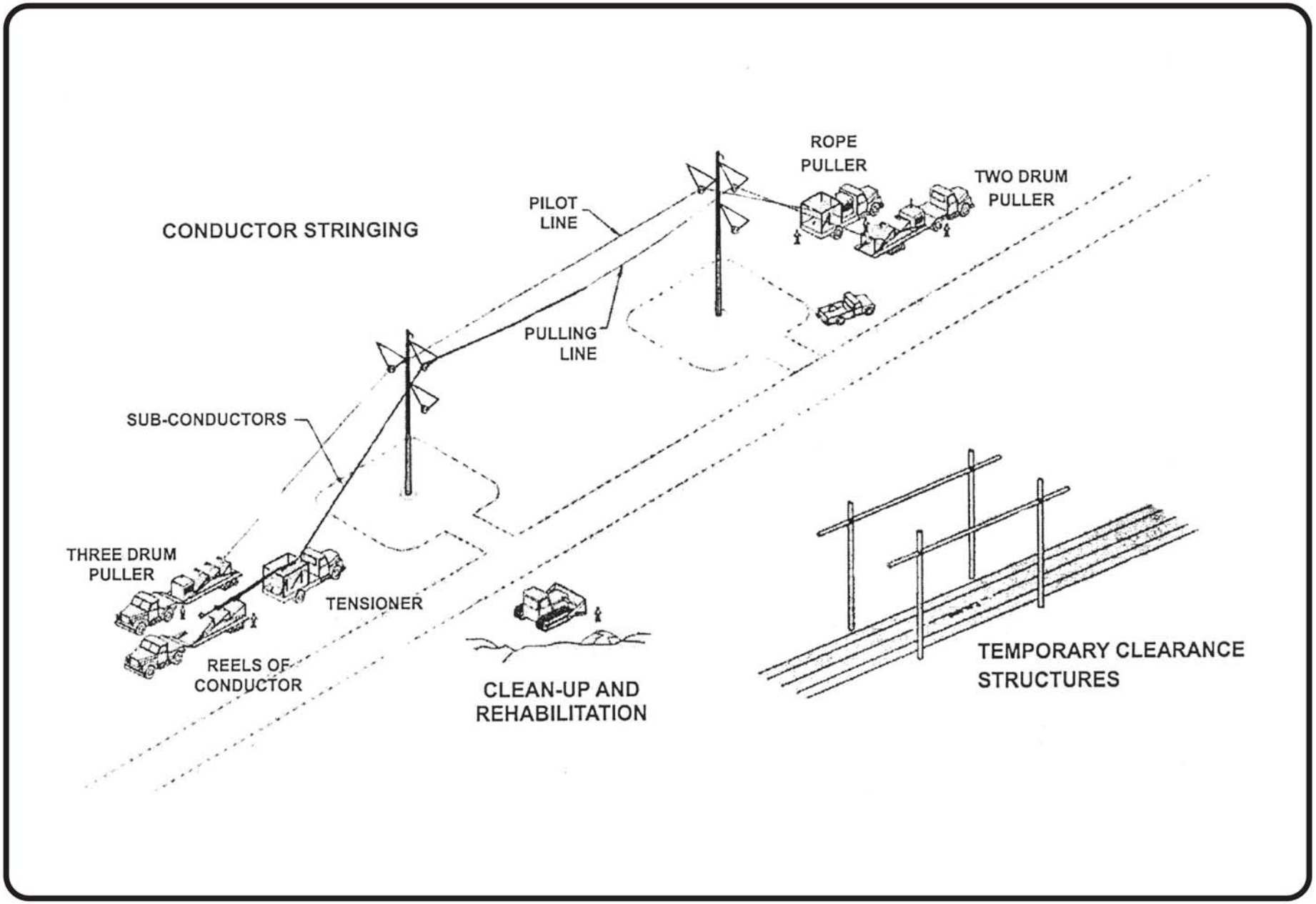

Sierra Pacific™

Figure 3-8: Conductor Installation

Traveler Installation

Prior to erecting the poles and removing or pulling conductor, travelers (rollers) will be installed on the bottom of each of the insulators. The travelers allow the conductor to be pulled through each pole until the entire line is ready to be pulled up to the final tension position.

Conductor Removal

The conductor will be removed by sectioning the conductor at dead-end poles. If feasible, the conductor will be spliced together with bump sleeves in areas with multiple dead-end poles prior to removal. A heavy reel puller will be staged at stringing sites or various intersections of existing access roads, and the conductor will be pulled through the ROW to the reel puller. The conductor will be pulled under a controlled tension to keep it elevated off the ground and away from obstacles. Two crew members will walk the ROW as the conductor is being pulled and will assist the conductor if it snags. During the pull, the conductor forces at the poles located at each end of the pull sections will be transferred to trucks, tensioners, and pullers. The existing conductor will be placed in a hoist and attached at one end to the pole to support the down-strain load, removing load on the existing insulator. The removed conductor will be spooled onto reel trucks in 25,000 pound sections and taken to an existing SPPCo storage facility or recycled as appropriate. Helicopters are not anticipated to be used during conductor removal.

Sock Line Installation

Conductor-stringing operations begin by pulling a sock line (a light rope or cable used to pull the conductor) onto the travelers from pole to pole using aerial manlifts or a construction vehicle traveling along access roads. Once the sock line is installed, it will be attached to reels of conductor at an adjacent pull site.

Conductor Installation

After the sock line is installed, the conductor will be attached to the sock line and pulled back through each pole to the next conductor pulling site. The 300-foot-diameter stringing sites are depicted in Attachment 3-A: Detailed Route Maps. After the conductor reaches the pulling site, it will be sagged and tensioned to design specifications. The line will be installed with a minimum ground clearance of 25 feet where there are no obstructions, 30 feet where the line crosses roads, and 35 feet for any railroad crossings. The new conductor will then be clipped into the end of each insulator on each pole, the travelers will be removed, and vibration dampers and other hardware will be installed.

In some cases, sleeves or splices may be installed on the transmission line. This might occur when the conductor is slightly damaged during stringing operations or if the conductor is not long enough and needs to be joined to another segment. If the conductor is damaged, a repair sleeve will be wrapped around the outside of the conductor and pressed into place in order to protect the conductor. Full tension splices, or compression splices, are utilized when the conductor is damaged too severely for a repair sleeve, when the conductor is not long enough to span between dead-end structures,[17] or if stringing locations are spread too far apart. During full-

[17] Dead-end structures act as conductor endpoints where the conductor can be disconnected from the transmission line.

tension splices, the two ends of the conductor are connected with the use of heavy-duty vises or alternatively, a small engineered implosive charge is wrapped around a specially-designed metallic sleeve, creating a controlled implosive compression connecting the two conductors.

Underground Distribution Duct Package and Cable Installation

As described previously, new underground distribution feeders will be installed at the Kings Beach Substation in order to maintain distribution service in the project area. Each distribution feeder will leave the Kings Beach Substation via an underground duct package and intercept the overhead distribution lines via new risers. The underground transmission facilities will be installed in a duct bank comprised of two 6-inch-diameter PVC conduits. Approximately seven underground splice vaults will be installed in line with the duct bank at intervals of approximately 900 feet or where the line must turn a corner.

Prior to trenching, SPPCo will notify other utility companies (via Underground Service Alert) to locate and mark existing underground utilities along the proposed underground alignment. Exploratory excavations (potholing) will also be conducted to verify the locations of existing facilities in the field if necessary. Two sets of two generally parallel trenches, measuring approximately 2 feet wide and 5 feet deep and separated by 5 feet, will be excavated using a backhoe. The first set of trenches, each approximately 25 feet long will exit the substation and head west. The remaining two trenches, approximately 775 and 1,125 feet long, will head south. To accommodate the installation of the underground splice vaults, the trench will be expanded to approximately seven 14-foot-long by 8-foot-wide by 9-foot-deep.

Upon completion of trench excavation, the underground splice vaults and 6-inch-diameter PVC conduits will be lowered into the trench. The conduits will be encased in at least 24 inches of compacted sand. The trench will then be backfilled using Type II aggregate base and compacted according to engineering specifications. From grade to the top of the duct package will be approximately 4 feet. Two runs of nonmetallic, red warning tape will be installed directly above the duct package at a depth of 1 foot and 3 feet below grade.

Upon completion of the installation of the duct bank, the three conductors will be installed in one of the PVC conduits, leaving the other empty for future use. Each cable segment will be pulled into the duct bank and terminated at the riser pole where the line converts to an overhead configuration. To pull the cable through the ducts, a cable reel is placed at one end of the section and a pulling rig is placed at the other end. A larger rope is pulled into the duct using a fish line and is then attached to the cable puller which pulls the cable through the duct. A lubricant will be applied to the cable as it enters the duct to decrease friction during pulling.

Individual lanes of traffic may be closed for a period of up to one week during trench excavation, duct bank and vault installation, and pulling activities. Because Deer Street, Speckled Street, and Cut Throat Avenue are all two-lane roads, two-way traffic will continue and will be controlled using flaggers. The intersection of Deer Street and Speckled Street will be closed for up to one day during construction.

The approximately 1,950 feet of trenches and underground splice vaults will result in the excavation of approximately 722.2 CY and 261.3 CY of material, respectively. After installation

of the duct bank and underground splice vaults, approximately 545.3 CY of Type II aggregate will be used to backfill the trench. The excavated material will be incorporated into the Kings Beach Substation grading or disposed of at an appropriate facility. Encountering contaminated soils is not anticipated based on the results of the hazardous materials records search, which is discussed further in Section 4.7 Hazards and Hazardous Materials. Additionally, trench dewatering is not anticipated based upon the analysis discussed in Section 4.8 Hydrology and Water Quality. The Applicant-Proposed Measures that will be implemented during construction are provided in Section 3.10 Applicant-Proposed Measures.

After the conductor has been installed, the ground surface will be restored to near preconstruction conditions, and vegetation will be replanted or the streets will be repaved as appropriate.

3.7.7 Cleanup and Post-Construction Restoration

Surplus material, equipment, and construction debris will be removed at the completion of construction activities. All man-made construction debris will be removed and recycled or disposed of at permitted landfill sites, as appropriate. Cleared vegetation will either be chipped and stored on the ROW for later use during reclamation or disposed of off-site, depending on landowner and agency agreements.

All areas that are temporarily disturbed around each pole, as well as areas used for conductor stringing and staging will be restored to preconstruction conditions, to the extent practicable, following construction. This will include returning areas to their original contours and reseeding in accordance with USFS guidelines and/or prearranged landowner agreements. Existing access roads that have been widened will be returned to their preconstruction widths and USFS-approved seed mixes will be applied to disturbed areas. SPPCo will attempt to close or restrict vehicle access to areas that will not remain open to the public or that have been seeded until the reclamation success criteria have been achieved. Rocks removed during access road grading and foundation excavation will be redistributed over the ROW to resemble adjacent site conditions.

3.7.8 Substation Construction Methods

To accommodate the upgrade to 120 kV, modification or reconstruction of the existing substations and switching stations will be required. All of the modifications planned will take place within the existing SPPCo-owned parcels. Existing facilities not undergoing major changes—Squaw Valley Substation, North Truckee Switching Station, and the Northstar Substation—will not require extensive site grading or excavation. The construction activities at the Tahoe City Substation will require more extensive excavation and the expansion at the Kings Beach Substation will require the import of some engineered fill and grading.

An auger will be used for excavations for deep footings, rather than a backhoe or excavator, to reduce the amount of soil removed. The volume of soil in CY that will be excavated at each substation is as follows:

- Squaw Valley Substation: Seven new footings totaling approximately 22.4 CY
- North Truckee Switching Station: Five new footings totaling approximately 18 CY

- Northstar Substation: One new transformer and regulator oil containment basin (transformer and regulator footings are contained inside the basin) totaling approximately 140 CY

- Tahoe City Substation: 20 new footings, two transformer oil containment basins, and one switchgear building footing totaling approximately 400 CY

- Kings Beach Substation:

  - 5,000 CY of engineered fill to build up the substation pad so it is level with the existing switching station

  - 16 new footings, two transformer oil containment basins, and one switchgear building foundation totaling approximately 285.8 CY

Once excavations are complete, cranes or similar equipment will be used to install the new hardware. After the new equipment is in place, it will be connected to the existing equipment and upgraded transmission lines. Because the substations are existing facilities with landscaping already in place, and all new equipment will be installed within the facilities' existing outer fence lines and at similar heights, additional landscaping or landscape plans will not be required.

3.7.9 Construction Workforce and Equipment

The number of personnel anticipated on site for each project component during peak construction conditions is shown in Table 3-11: Peak Construction Personnel. During construction, generally 50 workers, one helicopter crew of five personnel, and five construction inspectors will work on the project site. Additionally, between one and three biological monitors will be working with the crews to monitor adherence to the avoidance and protection measures, as required. Thus, a maximum of approximately 63 people are anticipated to be on site at any one time during pole removal and installation.

A list of typical construction equipment necessary for these activities is provided as Table 3-12: Typical Major Construction Equipment. This table also includes an estimated quantity for each equipment type and an approximate duration of use.

3.7.10 Construction Schedule

The project will be constructed in three phases. Construction is expected to take approximately 14 months within a 3-year construction period. The first phase will involve rebuilding the 650 Line, 132/650 Line Double-Circuit, the Northstar Fold, North Truckee Switching Station, Northstar Substation, and Kings Beach Substation. Construction activities for this phase of the project will occur between May and November 2011. SPPCo plans to have the 650 Line operational and in service at 120 kV by December 29, 2011. The second phase will involve the construction of the new 625 Line and modifications to the Tahoe City Substation and Squaw Valley Substation. Work on the 625 Line and associated substations will occur between May 2011 and November 2012. It is anticipated that the new 625 Line will be operational and in service at 120 kV by November 29, 2012. The third phase will involve the removal of the

Table 3-11: Peak Construction Personnel

Project Component	Number of Personnel
Existing 625 Line	
Conductor Removal	40
Tower Removal	40
ROW Restoration	25
New 625 Line	
Access Road and Spur Road Construction	40
ROW Clearing	25
Tower Installation	40
Conductor Installation	40
ROW Restoration	25
650 Line	
Access Road and Spur Road Construction	40
ROW Clearing	25
Tower Installation	40
Conductor Installation	40
ROW Restoration	25
132/650 Line Double-Circuit	
Access Road and Spur Road Construction	4
ROW Clearing	4
Tower Installation	20
Conductor Installation	20
ROW Restoration	5
Northstar Fold	
Access Road and Spur Road Construction	4
ROW Clearing	4
Tower Installation	20
Conductor Installation	20
ROW Restoration	5
Substations	
Brockway Substation	10
Northstar Substation	10
Squaw Valley Substation	10
Tahoe City Substation	20
Truckee Substation and North Truckee Switching Station	10
Kings Beach Switching Station	20

Table 3-12: Typical Major Construction Equipment

Equipment	Use	Approximate Number Required	Approximate Duration of Use (hours)
Tree Removal			
¾-ton and 1-ton pickup trucks	Transport construction personnel	5	5
525 rubber-tired skidder	Log skidder	1	8
Boom loader	Log loader	1	8
Brush puller	Pulls brush	3	8
Chainsaws	Cut trees	12	8
Chip van	Catch and haul chips	3	4
D5 CAT tracked skidder	Log skidder	1	8
Fire water tender	Suppress potential fires through water application	1	5
Fuel and fluid truck	Refuel and maintain vehicles	1	5
John Deere processor	Process wood	1	8
Large chipper	Chip wood	1	8
Logging trucks	Haul logs	2	8
Morbark Model 13 chipper	Chip wood	1	8
650 Line ROW Preparation			
¾-ton and 1-ton pickup trucks	Transport construction personnel	6	6
2-ton flatbed trucks; flatbed boom truck	Haul and unload materials	2	6
Bulldozer	Grade access roads and pole sites used during reclamation	2	10
Dump truck	Haul excavated materials and import backfill	2	10
Fire units	Control potential fires	2	10
Fire water tender	Suppress potential fires through water application	1	10
Fuel and fluid truck	Refuel and maintain vehicles	2	4
Mechanic truck	Service and repair equipment	1	10
Truck-mounted backhoe	Excavate	2	10
Water truck	Suppress dust and fire	2	10
650 Line Construction			
¾-ton and 1-ton pickup trucks	Transport construction personnel	6	5
2-ton flatbed trucks; flatbed boom truck	Haul and unload materials	2	5

Equipment	Use	Approximate Number Required	Approximate Duration of Use (hours)
Aerial lift trucks	Access poles, string conductor, and other uses	4	5
Air compressors	Operate air tools	1	2
Bulldozer	Grade access roads and pole sites used during reclamation	1	10
Conductor reel trailer (has small gas motor)	Transport cable reels and feed cables into conduit	1	10
Dump truck	Haul excavated materials and import backfill	1	10
Fire units	Control potential fires	2	6
Fire water tender	Suppress potential fires through water application	1	6
Fuel and fluid truck	Refuel and maintain vehicles	1	5
Large mobile cranes (75 tons)	Erect poles	1	10
Mechanic truck	Service and repair equipment	1	10
Puller and tensioner	Pull conductor and wire	1	10
Semi tractor-trailers	Haul poles and equipment	1	10
Small mobile cranes (12 tons)	Load and unload materials	2	6
Truck-mounted backhoe	Excavation	2	6
Water truck	Suppress dust and fire	1	10
Northstar Fold Construction			
¾-ton and 1-ton pickup trucks	Transport construction personnel	3	5
2-ton flatbed trucks; flatbed boom truck	Haul and unload materials	1	5
Aerial lift trucks	Access poles, string conductor, and other uses	2	5
Air compressors	Operate air tools	1	2
Bulldozer	Grade access roads and pole sites used during reclamation	1	10
Conductor reel trailer (has small gas motor)	Transport cable reels and feed cables into conduit	1	10
Dump truck	Haul excavated materials and import backfill	1	10
Fire units	Control potential fires	1	6
Fire water tender	Suppress potential fires through water application	1	6
Fuel and fluid truck	Refuel and maintain vehicles	1	5

Equipment	Use	Approximate Number Required	Approximate Duration of Use (hours)
Large mobile cranes (75 tons)	Erect poles	1	10
Mechanic truck	Service and repair equipment	1	10
Puller and tensioner	Pull conductor and wire	1	10
Semi tractor-trailers	Haul poles and equipment	1	10
Small mobile cranes (12 tons)	Load and unload materials	1	6
Truck-mounted backhoe	Excavate	1	6
Water truck	Suppress dust and fire	1	10
132/650 Line Double-Circuit			
¾-ton and 1-ton pickup trucks	Transport construction personnel	6	5
2-ton flatbed trucks; flatbed boom truck	Haul and unload materials	2	5
Aerial lift trucks	Access poles, string conductor, and other uses	4	5
Air compressors	Operate air tools	1	2
Bulldozer	Grade access roads and pole sites used during reclamation	1	10
Conductor reel trailer (has small gas motor)	Transport cable reels and feed cables into conduit	1	10
Dump truck	Haul excavated materials and import backfill	1	10
Fire units	Control potential fires	2	6
Fire water tender	Suppress potential fires through water application	1	6
Fuel and fluid truck	Refuel and maintain vehicles	1	5
Large mobile cranes (75 tons)	Erect poles	1	10
Mechanic truck	Service and repair equipment	1	10
Puller and tensioner	Pull conductor and wire	1	10
Semi tractor-trailers	Haul poles and equipment	1	10
Small mobile cranes (12 tons)	Load and unload materials	2	6
Truck-mounted backhoe	Excavate	2	6
Water truck	Suppress dust and fire	1	10
Self-Supporting Steel Pole Footings			
¾-ton and 1-ton pickup trucks	Transport construction personnel	3	6
2-ton flatbed trucks; flatbed boom truck	Haul and unload materials	1	6

Equipment	Use	Approximate Number Required	Approximate Duration of Use (hours)
Aerial lift trucks	Access poles, string conductor, and other uses	1	8
Boom truck (small crane)	Small lifting	1	3
Dump truck	Haul excavated materials and import backfill	1	8
Concrete truck	Deliver concrete	1	4
Concrete pumper truck	Pump concrete	1	4
Forklift (diesel)	Lifting	1	4
5 kW generator	Electricity generation	1	4
New 625 Line ROW Preparation			
¾-ton and 1-ton pickup trucks	Transport construction personnel	6	6
2-ton flatbed trucks; flatbed boom truck	Haul and unload materials	2	6
Bulldozer	Grade access roads and pole sites used during reclamation	2	10
Dump truck	Haul excavated materials and import backfill	2	10
Fire units	Control potential fires	2	10
Fire water tender	Suppress potential fires through water application	1	10
Fuel and fluid truck	Refuel and maintain vehicles	2	4
Mechanic truck	Service and repair equipment	1	10
Truck-mounted backhoe	Excavate	2	10
Water truck	Suppress dust and fire	2	10
New 625 Line Construction			
¾-ton and 1-ton pickup trucks	Transport construction personnel	6	5
2-ton flatbed trucks; flatbed boom truck	Haul and unload materials	2	5
Aerial lift trucks	Access poles, string conductor, and other uses	4	5
Air compressors	Operate air tools	1	2
Bulldozer	Grade access roads and pole sites used during reclamation	1	10
Conductor reel trailer (has small gas motor)	Transport cable reels and feed cables into conduit	1	10
Dump truck	Haul excavated materials and import backfill	1	10

Equipment	Use	Approximate Number Required	Approximate Duration of Use (hours)
Fire units	Control potential fires	2	6
Fire water tender	Suppress potential fires through water application	1	6
Fuel and fluid truck	Refuel and maintain vehicles	1	5
Large mobile cranes (75 tons)	Erect poles	1	10
Mechanic truck	Service and repair equipment	1	10
Puller and tensioner	Pull conductor and wire	1	10
Semi tractor-trailers	Haul poles and equipment	1	10
Small mobile cranes (12 tons)	Load and unload materials	2	6
Truck-mounted backhoe	Excavation	2	6
Water truck	Suppress dust and fire	1	10
Substation Construction/Decommissioning			
¾-ton and 1-ton pickup trucks	Transport construction personnel	3	5
2-ton flatbed trucks; flatbed boom truck	Haul and unload materials	1	5
Aerial lift trucks	Access poles, string conductor, and other uses	2	4
Boom truck (small crane)	Small lifting	2	4
Dump truck	Haul excavated materials and import backfill	4	8
Large mobile cranes (200 tons)	Move transformers	1	12
5 kW generator	Power generation	1	8
Mini excavator	Excavate	1	8
Skid steer (Bobcat)	Earth moving/augering	1	8
Road grader	Leveling	1	8
Compactor (roller with sheep's foot)	Compaction	1	8
Concrete truck	Deliver concrete	1	8
Water truck	Suppress dust and fire	1	2
625 Line Removal			
¾-ton and 1-ton pickup trucks	Transport construction personnel	6	5
2-ton flatbed trucks; flatbed boom truck	Haul and unload materials	2	5
Conductor reel trailer (has small gas motor)	Transport cable reels and feed cables into conduit	1	10
Fire units	Control potential fires	2	5

Equipment	Use	Approximate Number Required	Approximate Duration of Use (hours)
Fire water tender	Suppress potential fires through water application	1	5
Fuel and fluid truck	Refuel and maintain vehicles	1	5
Mechanic truck	Service and repair equipment	1	10
Semi tractor-trailers	Haul poles and equipment	1	8
Water truck	Suppress dust and fire	1	10
Chain saws or other mechanized clearing equipment	Fell and delimb trees	6	10

existing 625 Line and will occur between June and August 2013. These time frames are dependent on the timing of regulatory approvals. Table 3-13: Proposed Construction Schedule contains a summary of the key milestone dates for construction of the transmission lines and substations.

Construction hours will generally be between 7 a.m. and 7 p.m., six days per week, except when reconductoring the line across SR 267 and SR 89. When crossing SR 267 and SR 89, construction will occur as directed by the California Department of Transportation. All city, county, and state regulations, ordinances, and restrictions will be identified and complied with prior to and during construction.

3.8 OPERATION AND MAINTENANCE

The following describes the operation and maintenance activities required for the project. No new employees will be required to perform these duties after project construction has been completed.

3.8.0 Transmission Lines

The SPPCo North Lake Tahoe District Office operations personnel patrol the lines on an annual basis. Separately from these yearly patrols, SPPCo's vegetation management staff conducts an annual hazard tree inspection, in conjunction with a California Registered Forester. SPPCo's operations staff also patrols the lines in the event of unexplained outages or significant natural incidents, such as fire, flood, or electrical storms, to inspect and repair damage, on an as-needed basis. Inspections are conducted using helicopters, all-terrain vehicles, and/or line trucks.

The inspections involve a visual review of the line along a path that is roughly parallel to the centerline and along existing dirt access roads. Vegetation management activities include tree and vegetation trimming or removal to maintain the 40-foot-wide easement in accordance with California Public Utilities Commission (CPUC) General Order No. 95, Rule 35 and California Public Resources Code Section 4293. Hazard trees (dead, dying, diseased, decaying, or bug-infested trees) are also to be removed as part of these vegetation management activities.

In addition to the annual inspections, SPPCo operation and maintenance personnel generally conduct pole-climbing inspections every 5 years. These inspections include accessing each transmission pole site using four-wheel-drive vehicles on existing dirt access roads. SPPCo personnel climb each pole to inspect the integrity and condition of the hardware and insulators.

SPPCo personnel also require access to the line in the event of an emergency situation or if maintenance of a transmission pole is necessary. Under these circumstances, the transmission line is accessed by line trucks using existing dirt access roads, snowcats if appropriate, and/or a centerline travel route, or by helicopter. If any of these existing access roads become impassable, SPPCo will contact the property owner prior to use or conducting any potential improvements.

Table 3-13: Proposed Construction Schedule

Project Activity	Proposed Schedule
Permits Received	January 2011
Tree Removal	May 1, 2011 to June 30, 2011
Phase 1[18]	
ROW Preparation	June 1, 2011 to June 30, 2011
650 Line Construction	July 1, 2011 to October 15, 2011
Northstar Fold Construction	July 1, 2011 to July 31, 2011
132/650 Line Double-Circuit Construction	August 1, 2011 to October 31, 2011
Substation Construction/Modification	June 1, 2011 to August 31, 2011
In Service	December 29, 2011
Phase 2[19]	
ROW Preparation	May 1, 2012 to May 30, 2012
New 625 Line Construction	May 15, 2012 to October 15, 2012
Substation Construction/Modification	June 1, 2012 to August 21, 2012
In Service	November 29, 2012
Phase 3	
Removal of the Existing 625 Line	June 1, 2013 to August 21, 2013

[18] Phase 1 includes the rebuilding of the 650 Line, 132 Line and Northstar Fold, North Truckee Switching Station, Northstar Substation, and Kings Beach Substation as well as the decommissioning of the Brockway Substation.
[19] Phase 2 involves the construction of the 625 Line and modifications to the Tahoe City Substation and Squaw Valley Substation.

3.8.1 Substations and Switching Stations

Sierra Pacific Power's Substation Control and Testing (SCAT) crews maintain a minimum quarterly inspection schedule of each substation within SPPCo's service territory. During these inspections the SCAT crews record all operation counters in the breakers, transformers, and regulators. The inspectors also record any discrepancies such as broken insulators, oil leaks, and gate or fence disrepair. Significant discrepancies are fixed immediately and less significant discrepancies are scheduled for repair on a case-by-case basis.

The substation controls are operated remotely from SPPCo's Electrical Operations Center. The substation circuit breakers can also be manually opened or closed by troublemen at the substations, as needed.

3.8.2 Electric and Magnetic Fields

A discussion of electric and magnetic fields (EMF) that may be associated with the project is provided in Attachment 3-E: Electric and Magnetic Fields.

3.9 REQUIRED PERMITS AND AUTHORIZATIONS

The CPUC is the lead agency for compliance with the California Environmental Quality Act (CEQA) for this project. SPPCo must comply with the CPUC's General Order No. 131-D, which contains the permitting requirements for the construction of transmission and power line facilities. SPPCo is seeking to obtain a Permit to Construct (PTC) from the CPUC for this project.

SPPCo is seeking to obtain a Special Use Authorization from the USFS for construction of the project on USFS land. The USFS is also the lead federal agency for the project for compliance with the National Environmental Policy Act (NEPA). As the federal lead agency, the USFS will be responsible for compliance with Section 7 of the federal Endangered Species Act and Section 106 of the National Historic Preservation Act. SPPCo will obtain all other applicable permits for the project from federal, state, and local agencies. Table 3-14: Required Permits and Authorizations lists the potential permits and approvals required for project construction. All construction, operation, and maintenance activities associated with the project will be conducted in compliance with all relevant federal, state, and local regulations and permits.

3.10 APPLICANT-PROPOSED MEASURES

In addition to the requirements stipulated in the project permits and applicable regulations, SPPCo has committed to implementing several environmental protection measures, as presented in Table 3-17: Applicant-Proposed Measures, which will further facilitate avoidance and/or minimization of potential adverse environmental impacts. The various resource sections in Chapter 4 – Environmental Impact Assessment detail how and when the APMs will be applied to avoid or minimize impacts to the less-than-significant level.

In order to track, document, and enforce implementation of the environmental protection measures, SPPCo will maintain a compliance documentation system. The compliance levels and descriptions of each are summarized in Table 3-15: Compliance Levels.

Table 3-14: Required Permits and Authorizations

Agency	Permit/Authorization	Action Requiring Permit Approval or Review
Federal		
USFS	Special Use Authorization	Construction on USFS lands
	NEPA Review/Approval as a Cooperating Agency	Issuance of a Special Use Authorization
	Timber Sale Contract	Harvesting of timber on USFS lands
U.S. Fish and Wildlife Service	Section 7 Consultation (through the USFS review process)	Potential impacts to a federally listed species or its habitat
Advisory Council on Historic Preservation	Section 106 Consultation (through the USFS review process)	Potential impacts to cultural resources
U.S. Army Corps of Engineers	Section 404 Individual or Nationwide Permit	Work in waters of the U.S., including wetlands
FAA	Air Traffic Consultation	Permission to fly helicopters
Tahoe Regional Planning Agency	NEPA/CEQA Review/Approval as the Lead Agency	Issuance of a Linear Public Service Construction Permit
	Linear Public Service Construction Permit	Work within the Lake Tahoe Basin
	Tree Removal Permit	Removal of trees in the Lake Tahoe Basin
State		
CPUC	PTC	Construction or upgrade of facilities under 200 kV
	CEQA Review/Approval as a Responsible Agency	Issuance of a PTC
California Department of Fish and Game	Section 1602 Streambed Alteration Agreement	Disturbance to the bed or bank of jurisdictional waters
	2081 Incidental Take Permit	Potential impacts to a state-listed species
State Historic Preservation Officer (SHPO)	SHPO Consultation (through the Section 106 process)	Potential impacts to cultural resources
California Department of Forestry	Timber Harvest Plan	Harvesting of timber on private lands

Agency	Permit/Authorization	Action Requiring Permit Approval or Review
State Water Resources Control Board	Water Quality Order No. 99-08 – National Pollution Discharge Elimination System (NPDES) General Permit for Stormwater Discharges associated with Construction Activity	Discharges of stormwater runoff associated with construction activity involving land disturbance of 1 or more acres
	Water Quality Order No. 2003-0003 – Statewide General Waste Discharge Requirements for discharges to land with a low threat to water quality	Dewatering of excavations to land surface
Lahontan Regional Water Quality Control Board	Section 401 Water Quality Certification	Potential impacts to state water quality; required when a federal permit is issued
	Board Order No. R6T-2007-0008 – Waiver of Waste Discharge Requirements Related to Timber Harvest and Vegetation Management Activities	Potential impacts to state water quality resulting from tree and vegetation removal activities
	Board Order No. R6T-2005-2007 – Waste Discharge Requirements and NPDES General Permit No. CAG616002	Discharges of stormwater runoff associated with construction activity involving land disturbance of 1 or more acres in the Lake Tahoe hydrologic unit
	Board Order No. R6T-2008-0023 – Renewed Waste Discharge Requirements and NPDES General Permit for Limited Threat Discharges to Surface Waters	Dewatering of excavations to surface waters (if overland discharge is not feasible)
California Department of Transportation	Encroachment Permit	Construction, operation, and maintenance within, under, or over state highway ROWs
Local		
Placer County and Nevada County	Special Use Permit/Modification to Existing Special Use Permit	Construction, operation, and maintenance within, under, or over county road ROWs
Northern Sierra Air Quality Management District	Dust Control Plan	Disturbance of more than 1 acre of topsoil
Town of Truckee	Encroachment Permit	Construction, operation, and maintenance within, under, or over town road ROWs

SPPCo has assigned an Environmental Compliance Team to conduct construction monitoring and track compliance with the measures specified in this Proponent's Environmental Assessment and other project permits. Table 3-16: Environmental Compliance Team identifies the individuals on the team, as well as their respective responsibilities. In addition, SPPCo will employ the expertise of one or more on-site Environmental Inspector(s) during project construction to ensure that construction activities are conducted in compliance with all project permits and requirements.

Table 3-15: Compliance Levels

Level	Description
Compliance	Identifies an action in conformance with all project requirements
Notification	Identifies an action preceding a noncompliance; similar to a "fix-it" notice
Noncompliance	Identifies an action that does not comply with one or more project requirements, and includes formal documentation of the action and efforts to correct the noncompliance
Stop Task Order	Identifies a noncompliance action in writing that resulted in an adverse effect(s) to a sensitive resource, or a third-repeated noncompliance; issued only by the Project Manager, Construction Foreman, or the USFS Compliance Manager

Table 3-16: Environmental Compliance Team

Name	Position	Responsibilities
Clyyne Cook	Project Manager	Project Management
Eric Weldon	Environmental Manager	Permit Coordination
		Agency Coordination
		Compliance Reporting
To be determined (TBD)	ROW Agent	Property Owner Notification
TBD	Construction Foreman	Construction Oversight

Table 3-17: Applicant-Proposed Measures

APM Number	Description	Justification	Project Component					
			Existing 625 Line	New 625 Line	650 Line	132/650 Line Double-Circuit	Northstar Fold	Substations and Switching Stations
Aesthetics								
APM-AES-01	Construction activities will be kept as clean and inconspicuous as practical. Where practical, construction storage and staging will be screened with opaque fencing from close-range residential views and public viewing areas.	Construction-related visual impacts associated with grading and ground disturbance required for the installation of new structures and access roads could occur. While it is expected that these visual impacts will be short-term, this measure will ensure that views from nearby residences and the general public are not significantly impacted during the duration of construction.	✓	✓	✓	✓	✓	✓
APM-AES-02	Self-weathering dark brown steel poles (CorTen) will be used for the transmission lines in order to reduce potential visual contrast.	This measure requires that the new transmission line poles be dark brown to blend with the color of the coniferous forest backdrop so that the poles do not substantially alter or degrade the existing visual character or quality of the project's setting.		✓	✓	✓	✓	
APM-AES-03	Non-specular conductors will be used for the transmission lines to reduce the potential for new sources of glare.	On the transmission lines, non-specular conductors will be used to reduce the potential for adverse impacts on views in the area as a result of glare from the conductors.		✓	✓	✓	✓	
APM-AES-04	A non-reflective finish will be used for substation equipment at all substations and switching stations to reduce the potential for new sources of glare.	Using a non-reflective finish for substation equipment will minimize glare that could potentially adversely affect day or nighttime views in the area.						✓

APM Number	Description	Justification	Project Component					
			Existing 625 Line	New 625 Line	650 Line	132/650 Line Double-Circuit	Northstar Fold	Substations and Switching Stations
APM-AES-05	Landscaping will be installed at the Tahoe City Substation to provide screening and to reduce the project's visibility from SR 89 and the recreation trail. Plant material will be appropriate to the local landscape setting and will be consistent with SPPCo's technical requirements for landscaping in proximity to substation and transmission facilities. More specifically, the following will be implemented: • With the property owner's permission, conifer trees will be planted outside of the perimeter fence along the southwest and southeast sides of the substation site. Tree planting will replace existing trees that will be removed and will provide additional screening and landscape backdrop with respect to views from SR 89. • With the property owner's permission, on the southeast side of the substation, a mixture of trees and tall shrubs will be planted along the recreational trail adjacent to SR 89 to provide additional screening. • With the property owner's permission, at the western corner of the substation site, a mixture of shrubs will be planted outside of the perimeter fence in order to screen views from the recreation trail.	The Tahoe City Substation is located within a TRPA scenic roadway unit and vista, as identified in the Lake Tahoe Basin Scenic Resource Inventory. This measure provides for landscape screening to reduce the project's potential visual impacts from SR 89 and the recreation trail.						✓[20]
APM-AES-06	Proposed pole 625-085, located in a highly visible clearing adjacent to Mount Watson Road, will be relocated to the eastern edge of the clearing to reduce its visibility from the roadway.	In one location along the new 625 Line, an angle pole (pole 625-085) will be located in an open clearing along Mount Watson Road. This pole has the potential to appear prominent from the roadway. This measure requires the relocation of the pole to the eastern edge of the clearing to reduce project visibility.		✓				
APM-AES-07	In cases where replacement poles for the 650 Line are adjacent to SR 267 and will be visible in unobstructed foreground public views from the roadway, poles will be carefully sited to minimize their visibility when substantial tree removal will not be required to relocate them.	This measure requires carefully siting replacement poles along the 650 Line to minimize their visibility from SR 267, which is identified as a scenic roadway unit in the Lake Tahoe Basin Scenic Resource Inventory.			✓			

[20] APM-AES-05 applies only to the Tahoe City Substation.

APM Number	Description	Justification	Project Component					
			Existing 625 Line	New 625 Line	650 Line	132/650 Line Double-Circuit	Northstar Fold	Substations and Switching Stations
APM-AES-08	In cases where replacement poles for the 625 Line are adjacent to the Truckee River and will be visible in unobstructed foreground public views along the river or adjacent trails, poles will be carefully sited to minimize their visibility when substantial tree removal will not be required to relocate them.	This measure requires carefully siting replacement poles along the 625 Line to minimize their visibility from the Truckee River and adjacent 64-Acres Park.		✓				
APM-AES-09	In consultation with the USFS and in order to reduce potential project visibility, selective, site-specific conifer tree planting will be considered in limited areas along the new 625 Line route where relatively unobstructed foreground views of new structures are seen from Mount Watson Road. Placement of new trees will not conflict with project operations or safety requirements.	New conifer tree planting in selected areas will provide screening, thereby reducing the project's visibility and visual contrast from Mount Watson Road, which is a key public viewpoint.		✓				
Air Quality								
APM-AIR-01	Unpaved areas subject to vehicle access will be stabilized using water at least two times daily, or as needed to control fugitive dust. A locally approved chemical dust palliative, applied according to the manufacturer's recommendations, may be substituted for watering.	This measure will ensure that dust abatement is implemented on a regular basis and as needed throughout construction and that only approved chemical dust palliatives are used. APM-AIR-01, in conjunction with the other APMs for air quality, will ensure that local air standards and plan thresholds for dust and particulate matter (PM) are not exceeded.	✓	✓	✓	✓	✓	✓
APM-AIR-02	All inactive, disturbed portions of the project's ROW will be covered, seeded, or watered, as needed to control fugitive dust, until suitable vegetative cover is established.	Watering, seeding, or covering of disturbed inactive areas will minimize fugitive dust and ensure compliance with local air quality thresholds.	✓	✓	✓	✓	✓	✓
APM-AIR-03	Prior to any ground disturbance, sufficient water will be applied to the area to be disturbed in order to control fugitive dust emissions.	Watering the ground prior to disturbance will help to suppress dust. The measure, in conjunction with the other APMs for air quality, will ensure that local air quality standards and thresholds are not exceeded.	✓	✓	✓	✓	✓	✓
APM-AIR-04	If wind-driven fugitive dust cannot be stabilized using water or a chemical dust suppressant such that the resulting dust plume crosses the nearest property line, all grading and excavating activities must cease until dust can be effectively controlled.	This measure will ensure that fugitive dust does not become a safety hazard or a nuisance to adjacent uses (such as roads and highways) and property owners during construction.	✓	✓	✓	✓	✓	✓
APM-AIR-05	Exposed stockpiles (e.g., dirt, sand, etc.) will be covered and/or stabilized with water or a locally approved chemical dust stabilizer as needed to control fugitive dust emissions. When loading or unloading stockpiled material, material will be stabilized using water and/or drop heights will be minimized to control fugitive dust.	This measure is intended to reduce wind-driven fugitive dust from spoil stockpiles and when loading and unloading soil material.	✓	✓	✓	✓	✓	✓
APM-AIR-06	Traffic speeds on unpaved roads and the ROW will be limited to 15 miles per hour.	This measure is intended to reduce fugitive dust by limiting vehicle speeds on unpaved access roads.	✓	✓	✓	✓	✓	✓

APM Number	Description	Justification	Project Component					
			Existing 625 Line	New 625 Line	650 Line	132/650 Line Double-Circuit	Northstar Fold	Substations and Switching Stations
APM-AIR-07	Construction vehicles and equipment will be cleaned to prevent dust, silt, mud and dirt from being tracked off-site prior to entering public roadways.	This measure is intended to avoid tracking silt, mud, and dirt onto public roadways and reduce fugitive dust emissions.	✓	✓	✓	✓	✓	✓
APM-AIR-08	Any visible trackout deposited on paved, public roadways will be cleaned up at the conclusion of each workday or at 24-hour intervals for continuous operation. If trackout extends for a cumulative distance greater than 50 feet, it will be cleaned up within 1 hour. Trackout will be cleaned with a wet sweeper or vacuum device.	This measure is intended to reduce fugitive dust by keeping public roadways clean so that dirt deposited on road surfaces by construction equipment does not become dust due to vehicles traveling over it. This measure also provides guidance on when, where, and how trackout should be cleaned from roadways.	✓	✓	✓	✓	✓	✓
APM-AIR-09	Trucks transporting bulk materials off-site will be maintained such that no spillage can occur from holes or other openings in the cargo compartments. Loads will be completely covered or the bulk material will be wetted and loaded to maintain 6 inches of freeboard from the top of the container.	This measure is intended to reduce fugitive dust by minimizing the potential for materials to blow out of or spill from the beds of haul trucks.	✓	✓	✓	✓	✓	✓
APM-AIR-10	SPPCo will limit actively graded areas to a cumulative total of 5 acres per day in order to control fugitive dust. The total area of disturbance can exceed this acreage so long as the actively graded portion is below this threshold.	This measure will control the amount of earth disturbance occurring simultaneously on different project components in order to keep fugitive dust emissions below established thresholds.	✓	✓	✓	✓	✓	✓
APM-AIR-11	Traffic will be controlled by flaggers or other methods, as necessary, to improve traffic flow along roadways in the project area.	Improving traffic flow along roadways will reduce idling time of vehicles. Reducing idling time will reduce vehicle emissions.	✓	✓	✓	✓	✓	✓
APM-AIR-12	Construction activities in more populated areas will be scheduled during off-peak hours, to the extent practical, to minimize impacts to traffic flow.	This measure will improve traffic flow along roadways, which will reduce idling time of vehicles and the associated emissions.	✓	✓	✓	✓	✓	✓
APM-AIR-13	Vehicle idling time will be limited to a maximum of 5 minutes for vehicles and construction equipment, except where idling is required for the equipment to perform its task.	As stated previously, reducing idling time will reduce emissions.	✓	✓	✓	✓	✓	✓
APM-AIR-14	If suitable park-and-ride facilities are available in the project vicinity, construction workers will be encouraged to carpool to the job site to the extent feasible. The ability to develop an effective carpool program for the project would depend upon the proximity of carpool facilities to the job site, the geographical commute departure points of construction workers, and the extent to which carpooling would not adversely affect worker show-up time and the project's construction schedule.	This measure encourages carpooling to reduce emissions from commute vehicles by reducing the total number of commute vehicles traveling to and from the construction sites.	✓	✓	✓	✓	✓	✓
APM-AIR-15	All off-road diesel engines with a rated output of greater than 100 horsepower will, at a minimum, meet the Tier II California Emissions Standards for Off-Road Compression Ignition Engines. If reasonably available, Tier III engines will be employed.	This measure will reduce the emissions of PM and oxides of nitrogen emitted by heavy construction equipment, which will help to reduce project emissions.	✓	✓	✓	✓	✓	✓

APM Number	Description	Justification	Project Component					
			Existing 625 Line	New 625 Line	650 Line	132/650 Line Double-Circuit	Northstar Fold	Substations and Switching Stations
Biological Resources								
APM-BIO-01	Prior to construction, all SPPCo, contractor, and subcontractor project personnel will receive training regarding the appropriate work practices necessary to effectively implement the APMs and to comply with the applicable environmental laws and regulations, including appropriate wildlife avoidance measures; impact minimization procedures; the importance of sensitive resources, and the purpose and methods for protecting such resources. Among other topics, the training will also include a discussion of BMPs to reduce the potential for erosion and sedimentation during construction.	This measure is intended to provide all project personnel sufficient detail regarding the project's APMs, applicable environmental laws, regulations, and sensitive resources that have the potential to be encountered in the project area. This training will provide a basic level of environmental awareness to all project personnel.	✓	✓	✓	✓	✓	✓
APM-BIO-02	SPPCo will conduct a complete floristic survey, including surveys for all rare plants, fungi, and invasive weeds, during a time that coincides with the greatest number of blooming periods for target species. This survey will be conducted no more than one year prior to the start of construction. Populations of rare plants or fungi and weed-infested areas will be flagged or fenced no more than 30 days prior to the start of construction. Flagging and fencing will be refreshed and maintained throughout construction.	This measure will ensure that sensitive plants are identified prior to construction and protected during construction. In addition, noxious weed populations will be avoided to the extent possible, thereby minimizing the potential spread of these species throughout the area by construction vehicles and equipment.	✓	✓	✓	✓	✓	
APM-BIO-03	As stated in the USFS Manual 2080 Noxious Weed Management, SPPCo will complete a noxious weed risk assessment for all areas to be temporarily impacted, including the ROW, access roads that require improvement, staging areas, and pull sites.	This measure is being implemented to respond to the USFS requirement for a weed risk assessment.	✓	✓	✓	✓	✓	
APM-BIO-04	Before construction activities begin, SPPCo will employ conventional or mechanical methods to remove noxious weed species where appropriate, depending on the time of year and ecology of the weed species. Herbicides may be used in project areas outside of the Lake Tahoe Basin. In areas where treatment is not feasible, SPPCo will clearly flag or fence noxious weed areas in order to clearly delineate work exclusion.	This measure will help prevent the accidental spread of noxious weeds into new areas where they do not currently exist. This measure also ensures that herbicides will not be used in the Lake Tahoe Basin.	✓	✓	✓	✓	✓	
APM-BIO-05	Equipment will arrive at the project area clean and weed-free. Equipment will be inspected by the on-site environmental monitor prior to use in the project area to ensure that no mud or other signs that weed seeds could be present exist. If the equipment is not clean, the monitor will deny entry to the ROW and other work areas.	This measure is intended to prevent the accidental introduction and spread of noxious weeds via construction-related equipment by ensuring that the equipment is clean prior to use.	✓	✓	✓	✓	✓	✓

APM Number	Description	Justification	Project Component					
			Existing 625 Line	New 625 Line	650 Line	132/650 Line Double-Circuit	Northstar Fold	Substations and Switching Stations
APM-BIO-06	Vehicles and equipment will be cleaned using high-pressure water or air at designated weed-cleaning stations after exiting a weed-infested area, as specified by the Noxious Weed Risk Assessment. Cleaning stations will be designated by a botanist or noxious weed specialist and located away from aquatic resources.	This measure is intended to prevent the accidental spread of noxious weeds from areas of existing infestation to areas of non-infestation. Thorough cleaning of vehicles is one of the most cost-effective and efficient means of controlling the spread of noxious weeds.	✓	✓	✓	✓	✓	✓
APM-BIO-07	Only certified weed-free construction materials, such as sand, straw, or fill, will be used throughout the project.	This measure will help prevent the introduction and spread of noxious weeds from imported materials.	✓	✓	✓	✓	✓	✓
APM-BIO-08	If designated weed-infested areas are unavoidable, the plants may be cut and disposed of in a landfill in sealed bags or disposed of or destroyed in another manner acceptable to the USFS, TRPA, or other agency as appropriate. Layers of mulch, degradable geotextiles, or similar materials may be placed over the infestation area to minimize the spread of seeds and plant materials by equipment and vehicles during construction. These materials will be secured so they are not blown or washed away.	This measure will help prevent the spread of existing noxious weed populations if they are unavoidable during construction. Coordination with the applicable agency will ensure proper implementation of the measure so that the spread of weeds is minimized.	✓	✓	✓	✓	✓	✓
APM-BIO-09	If possible, exclusion zones will be established around any identified rare plants. In the event that a rare plant may be impacted by construction activities, all attempts to relocate individuals will be made. If possible, SPPCo will collect any mature seeds from the relocated plants and store them at an appropriate native plant nursery or comparable facility. Upon the completion of work, SPPCo will redistribute the seeds within the original location of the population. SPPCo will also monitor and document the success rate of the transplanted individuals until the arrival of the first snow. In instances where take or relocation may occur, appropriate notifications will be made to the CPUC, CDFG, TRPA, and/or USFS, as applicable depending on the species listing status. SPPCo will attempt to relocate all *Plumas ivesia* individuals along the 650 Line to avoid take. If relocation is not possible or unsuccessful, SPPCo will consult with the CDFG in order to establish appropriate mitigation measures.	This measure is intended to prevent or compensate for impacts to rare plants, including *Plumas ivesia*. Consulting with the CDFG in the event the measure cannot be implemented will ensure protection of the species.	✓	✓	✓	✓	✓	
APM-BIO-10	Any rare plants identified during the floristic surveys will be documented, photographed, and submitted to the CNDDB.	Identification and documentation of rare plants will be included in a widely-used database, providing increased scientific knowledge regarding species.	✓	✓	✓	✓	✓	

APM Number	Description	Justification	Project Component					
			Existing 625 Line	New 625 Line	650 Line	132/650 Line Double-Circuit	Northstar Fold	Substations and Switching Stations
APM-BIO-11	SPPCo will conduct protocol-level surveys prior to construction to determine whether northern goshawks or California spotted owls are nesting in work areas within suitable habitat along the new 625 Line, existing 625 Line, and 650 Line, including USFS-designated PACs or HRCAs.	This measure will identify the locations of any nesting California spotted owls and northern goshawks so they can be avoided during construction, as described in APM-BIO-12.	✓	✓	✓			
APM-BIO-12	No vegetation management or treatment will occur within 0.25 mile of active California spotted owl nests during the breeding season (March 1 to August 31) or within 0.25 mile of active northern goshawk nests during the breeding season (February 15 to September 15), unless surveys confirm that the birds are not nesting. A qualified biologist will have the ability to amend the start and end dates of these breeding seasons with concurrence from appropriate agencies if it can be determined that breeding has not started or that fledglings have left the nest. If the location of a nest site within a PAC is unknown, either surveys are required to locate the nest stand and determine nesting status or, as an alternative to surveys, an activity buffer will be applied to the 0.25-mile area surrounding the PAC. The activity buffer may be waived for vegetation treatments of limited scope and duration, when a biological evaluation determines that such projects are unlikely to result in breeding disturbance considering their intensity, duration, timing, and specific location. Where a biological evaluation concludes that a nest site will be shielded from planned activities by topographic features that will minimize disturbance, the buffer distance may be modified in coordination with the USFS.	This measure is intended to avoid impacts to nesting California spotted owls and northern goshawks. The measure will also ensure that any changes to vegetation management will be approved by the appropriate agency.	✓	✓	✓			

APM Number	Description	Justification	Project Component					
			Existing 625 Line	New 625 Line	650 Line	132/650 Line Double-Circuit	Northstar Fold	Substations and Switching Stations
APM-BIO-13	To offset permanent removal of old-growth trees within designated PACs and HRCAs, SPPCo will conduct protocol-level surveys in an area of similar size to the area impacted by permanent old-growth tree removal within PACs and HRCAs in support of the USFS's goal of locating the best suitable habitat in the area for the establishment of additional California spotted owl and northern goshawk PACs and HRCAs. SPPCo will coordinate with the USFS prior to conducting these surveys to identify areas of interest and existing surveys in these areas, if any. As an alternative, SPPCo proposes to provide in-lieu fee compensation in the amount of 500 dollars per acre of lost HRCA or PAC habitat to be used to support further survey efforts, habitat restoration, or habitat protection.	This measure is intended to offset permanent impacts to California spotted owl and northern goshawk habitat by providing additional survey efforts in locations chosen in consultation with the USFS or funding for surveys, restoration, or protection of habitat.	✓	✓	✓			
APM-BIO-14	SPPCo will conduct protocol-level surveys for willow flycatcher along the 650 Line between MP 0.2 and MP 0.3, MP 1.1 to MP 1.2, and MP 1.5 to MP 1.6 due to sightings during the 2007 field surveys and recent CNDDB records. If nesting willow flycatchers are discovered within the survey area, 250-foot exclusionary buffer zones will be established to exclude work during the breeding season—June through August—or until young have fledged the nest. If an area is given clearance to proceed with construction and nesting activities subsequently occur, it will be assumed that the nesting pair is acclimated to the ongoing disturbance of construction. If circumstances exist such that future activities may result in the abandonment or failure of the nest, as determined by a qualified biologist, an appropriate exclusionary buffer will be established by SPPCo, in coordination with the CDFG, to protect nesting birds.	This measure is intended to avoid impacts to nesting willow flycatchers by defining survey locations and appropriate buffer zones.			✓			

APM Number	Description	Justification	Project Component					
			Existing 625 Line	New 625 Line	650 Line	132/650 Line Double-Circuit	Northstar Fold	Substations and Switching Stations
APM-BIO-15	Preconstruction biological surveys will be conducted no more than 30 days prior to construction activities to identify biological resources, including burrows, which could be impacted by construction activities. All burrows will be inspected for use by sensitive mammals, and buffers may be established based on burrow occupation. If an area is given clearance to proceed with construction and burrowing activities subsequently occur, it will be assumed that the individuals are acclimated to the ongoing disturbance of construction. If circumstances exist such that future activities may result in the abandonment of the burrow, as determined by a qualified biologist, an appropriate exclusionary buffer will be established by SPPCo, in coordination with CDFG and, if necessary, the USFWS.	This measure is intended to identify sensitive mammals and burrows in the project area in order to facilitate the implementation of avoidance measures and lessen potential impacts.	✓	✓	✓	✓	✓	✓
APM-BIO-16	If a potentially active sensitive mammal burrow is unavoidable, SPPCo will employ den-dusting or scoping to determine the species and reproductive status of the animal. If the burrow is determined to be active and does not contain young, SPPCo will excavate the burrow by hand or block the entrance to prevent re-entry until after the completion of work. If the animal is determined to be raising young, SPPCo will establish a 200-foot exclusionary buffer surrounding the burrow until it is determined that the young have left the den. After it is determined that young have left the den, SPPCo will commence hand excavation. SPPCo will contact CDFG and/or USFS prior to any den-dusting, scoping, or burrow excavation.	The measure will protect sensitive young mammals in active burrows through the implementation of appropriate exclusionary buffers around the burrows. The measure will also ensure that any burrows (not containing young) are excavated so that animals are not harmed during construction activities.	✓	✓	✓	✓	✓	✓
APM-BIO-17	Concurrent with the preconstruction surveys described in APM-BIO-15, surveys will be conducted for sensitive amphibians at aquatic habitat crossed by the project. These features will be evaluated for sensitive amphibians, including eggs or juveniles. If adults, juveniles, or eggs of sensitive amphibians are discovered, a permitted specialist will relocate the individuals to suitable habitat outside of the construction area. If sensitive amphibians are discovered in the construction area after the start of work, the environmental monitor will allow the individuals to leave under their own volition. As an alternative, an agency-approved biologist may relocate the individuals from the project area to similar, suitable habitat. SPPCo will coordinate with the CDFG, USFWS, and/or USFS prior to relocating any individuals.	This measure is intended to identify sensitive amphibians in the project area so that they can be relocated or allowed to leave construction areas unharmed. The measure also ensures appropriate agency coordination in the event of a required relocation.	✓	✓	✓	✓	✓	

APM Number	Description	Justification	Project Component					
			Existing 625 Line	New 625 Line	650 Line	132/650 Line Double-Circuit	Northstar Fold	Substations and Switching Stations
APM-BIO-18	Nesting bird surveys will be conducted no more than 30 days prior to construction activities if work is scheduled to occur during the breeding season—February to September. These surveys may utilize helicopters if it is deemed beneficial to the results. Exclusionary buffer zones (to be determined based on species-specific needs) will be created surrounding any active nests along the project alignment. Buffers will be established by a qualified biologist prior to the start of construction. If an area is given clearance to proceed with construction and nesting subsequently occurs, it will be assumed that the individuals are acclimated to the ongoing disturbance of construction. If circumstances exist such that future activities may result in the abandonment or failure of the nest, as determined by a qualified biologist, an appropriate exclusionary buffer will be established by SPPCo in coordination with the CDFG.	This measure is intended to identify and protect nesting birds during the avian breeding season, thus complying with state endangered species and migratory bird protection laws and lessening any impact.	✓	✓	✓			
APM-BIO-19	Transmission poles will be constructed to conform to the practices described in the Suggested Practices for Avian Protection on Power Lines Manual developed by the Avian Power Line Interaction Committee.	This measure is intended to help prevent accidental injury or mortality of avian species, which could occur from electrocution.	✓	✓	✓	✓	✓	✓

APM Number	Description	Justification	Project Component					
			Existing 625 Line	New 625 Line	650 Line	132/650 Line Double-Circuit	Northstar Fold	Substations and Switching Stations
APM-BIO-20	Bat surveys will be conducted in the spring, no more than 30 days prior to the start of construction, in order to identify active bat roosting sites, such as snags or dense trees. All potential roosting sites will be surveyed by a qualified biologist in order to determine usage. All non-active roosting sites will be trimmed within 30 days of the surveys in order to prevent new roosts from being established. If it is determined that an active roosting site will be impacted, SPPCo will consult with the CDFG and/or USFS in order to acquire appropriate authorizations to remove the roosting sites. All active non-maternity roosting sites will be fitted with passive exclusion devices, such as one-way doors, and all bats will be allowed to leave voluntarily. Once it is confirmed that all bats have left the roost, crews will be allowed to continue work in the area. If a maternity roosting site is discovered, SPPCo will consult with the CDFG and/or USFS in order to establish appropriate exclusionary buffers until all young are determined to be volant by a qualified biologist. Once it is determined that all young are volant, passive exclusion devices will be installed and all bats will be allowed to leave voluntarily. Once it is determined by a qualified biologist that all bats have left the roost, crews will be allowed to work within the buffer zone.	This measure is intended to avoid potential impacts to bats and bat roosting sites in the project area. By conducting preconstruction bat surveys in the appropriate season, active bat roosting sites will be identified and can be protected through the implementation of this measure.	✓	✓	✓	✓	✓	
APM-BIO-21	Environmental monitors will be present with each crew during all vegetation-removal activities to ensure that impacts to biological resources are minimized to the extent possible. For all other construction activities, monitors will be allowed to cover up to 5 miles of the project area at once to allow multiple crews to work in close proximity to each other at the same time. Environmental monitors will have the authority to stop work or direct work in order to ensure the protection of resources and compliance with all permits.	The highest potential of encountering sensitive species occurs during initial clearing and vegetation removal. This measure specifies the appropriate coverage area for the environmental monitors. The measure is intended to place a qualified biologist with each clearing crew to prevent accidental harm or take of sensitive species and ensure compliance with project permits.	✓	✓	✓	✓	✓	
APM-BIO-22	An environmental monitor will inspect all pole excavations and areas of active construction on a daily basis for trapped wildlife. Wildlife found in active construction areas will be allowed to passively leave the site. If necessary, wildlife may be relocated by a qualified biologist. The construction foreman will notify the environmental monitor immediately if any wildlife enters or becomes trapped in the work area.	This measure is intended to minimize wildlife entrapment in open excavations or trenches. This measure is also intended to ensure that in the event that wildlife does inadvertently enter construction areas, individuals will be allowed to passively escape. Further, should an animal fail to escape on its own, this measure provides that qualified individuals will ensure that the animal is removed unharmed.	✓	✓	✓	✓	✓	✓

APM Number	Description	Justification	Project Component					
			Existing 625 Line	New 625 Line	650 Line	132/650 Line Double-Circuit	Northstar Fold	Substations and Switching Stations
APM-BIO-23	Topsoil, where present, will be salvaged in areas that will be graded or excavated. Topsoil will be segregated, stockpiled separately from subsoil, and covered. The topsoil will then be replaced to the approximate location of its removal after project construction has been completed to facilitate revegetation of disturbed areas. Topsoil will not be salvaged where permanent facilities are planned or where operation and maintenance activities preclude the establishment of vegetation.	This measure will facilitate restoration and revegetation of disturbed areas and ensure that topsoil is not lost or mixed with subsoil.	✓	✓	✓	✓	✓	
APM-BIO-24	If noxious weed populations are later identified throughout the course of construction in staging areas, parking areas, or access routes, they will be treated according to APM-BIO-04.	This measure will help prevent the accidental spread of noxious weeds into new areas where they do not currently exist.	✓	✓	✓	✓	✓	
APM-BIO-25	If the environmental monitor determines that construction is occurring in an active mule deer fawning area, they will have the authority to temporarily halt or relocate work until the fawns move out of the project area. In addition, helicopter flight paths may be rerouted to avoid these areas if it is determined that helicopter use may impact fawns.	This measure is intended to avoid impacts to mule deer and mule deer fawns that might be sensitive to construction activity and helicopter noise.	✓	✓	✓			
APM-BIO-26	Work areas will be clearly marked with fencing, staking, flagging, or another appropriate material. All project personnel and equipment will be confined to delineated work areas. In the event that work must occur outside of the work area, approval from the CPUC will be obtained prior to the commencement of activities. USFS approval will also be obtained in additional work areas are required on forest lands.	Clearly delineating work areas and requiring activities to be performed only in the designated areas will minimize impacts to sensitive habitat and species located outside of the work areas, and will limit the project's overall disturbance.	✓	✓	✓	✓	✓	
APM-BIO-27	Helicopters will be used, where necessary, to avoid impacts to waterways or in areas of rough terrain. Appropriate measures, including regular watering, will be implemented at landing zones in order to control dust. Helicopter use within HRCAs and PACs will be prohibited if vegetation treatment restrictions are concurrently in place.	Using helicopters near waterways or in areas of rough terrain will protect habitat and eliminate the need to grade new access roads in those areas. Because helicopter use has the potential to increase fugitive dust, the dust control techniques identified in this measure will be implemented. Because helicopter-related noise also has the potential to impact nesting northern goshawk and California spotted owl, use within PACs and HRCAs may be limited.	✓	✓	✓	✓	✓	
APM-BIO-28	SPPCo will minimize vegetation and tree removal to only the areas necessary for construction, especially in riparian areas.	This measure will minimize impacts to habitat, particularly in sensitive riparian areas.	✓	✓	✓	✓	✓	
APM-BIO-29	Skidding of trees will be avoided in waters of the U.S., including wetlands, unless the channel is dry or lined with snow. In addition, an environmental monitor will be present, as described in APM-HYD-05.	If circumstances allow for the skidding of trees through waters of the U.S., the environmental monitor will ensure that the proper protocols are followed. This measure will reduce potential temporary impacts to aquatic resources and existing drainage patterns during construction.	✓	✓	✓	✓	✓	

APM Number	Description	Justification	Project Component					
			Existing 625 Line	New 625 Line	650 Line	132/650 Line Double-Circuit	Northstar Fold	Substations and Switching Stations
APM-BIO-30	Work in wetlands or wet meadow habitats with saturated soil conditions will be scheduled when soils are dry to the extent possible. If soils become saturated, timber mats will be installed along all vehicle and equipment access routes to minimize rutting. Disturbed wetland areas will be restored to preconstruction conditions and seeded with a native annual species to stabilize the soils and minimize the introduction of noxious weeds, as specified by the USACE and RWQCB. In accordance with the USACE "no net loss" policy, all permanent wetland impacts will be mitigated at a minimum of a 1:1 ratio. This mitigation will come in the form of either contributions to a USACE-approved wetland mitigation bank or through the development of a Compensatory Mitigation and Monitoring Plan aimed at creating or restoring wetlands in the surrounding area.	Temporary impacts to wetlands, aquatic resources, and existing drainage patterns will be minimized and avoided during construction as a result of this measure. This measure will also ensure that there is no permanent net loss of waters of the U.S. upon completion of the project. This measure also ensures that disturbed wetlands are restored per RWQCB and USACE specifications.	✓	✓	✓	✓	✓	
APM-BIO-31	Visibility permitting, all excavations will be inspected for sensitive aquatic wildlife prior to dewatering. Wildlife found in excavations will be allowed to leave passively or will be relocated by a qualified biologist.	This measure is intended to prevent mortality of sensitive species due to the use of dewatering pumps and other machinery. This measure is also intended to ensure that in the event that wildlife inadvertently enters an excavation and is unable to escape passively, a qualified individual will ensure that the animal is removed unharmed.	✓	✓	✓	✓	✓	✓
APM-BIO-32	All dewatering pump intakes will be fitted with filter screening to prevent impacts to aquatic wildlife that may accidentally enter excavations.	Installation of dewatering pump intake screens will ensure that aquatic wildlife are not harmed during dewatering activities.	✓	✓	✓	✓	✓	✓
APM-BIO-33	All trash and food will be removed from the site at the end of each workday in order to deter wildlife from entering the site.	This measure is intended to prevent attracting wildlife to the project area.	✓	✓	✓	✓	✓	✓
APM-BIO-34	No pets or firearms will be allowed in the project area.	This measure is intended to prevent hunting, accidental injury, harassment, or killing of native and sensitive wildlife.	✓	✓	✓	✓	✓	✓
APM-BIO-35	No harm, harassment, or collection of plant and wildlife species will be allowed. Feeding of wildlife will be prohibited.	This measure is intended to avoid impacts to sensitive plant and animal species.	✓	✓	✓	✓	✓	✓

APM Number	Description	Justification	Project Component					
			Existing 625 Line	New 625 Line	650 Line	132/650 Line Double-Circuit	Northstar Fold	Substations and Switching Stations
APM-BIO-36	Prior to construction, SPPCo will develop a Restoration Plan that will address final clean-up, stabilization, and revegetation procedures for areas disturbed by the project. On USFS land, SPPCo will coordinate with the USFS to determine an appropriate seed mix. On private land, SPPCo will coordinate with the landowner and/or provide the landowner with a suggested seed mix based on agency consultation. The plan will include approved seed mixes, application rates, and application methods. If broadcast seeding is determined to be the most feasible application method, seeding rates will be doubled and the seeding method rationale will be explained. The plan will also include long-term erosion and sediment control measures, slope stabilization, and monitoring procedures.	Development and implementation of a Restoration Plan will ensure that landowners and agencies are consulted regarding restoration, that the project area is returned to preconstruction conditions, and that long-term restoration procedures are identified.	✓	✓	✓	✓	✓	
APM-BIO-37	SPPCo will offset the permanent loss of trees along the new 625 Line ROW by replanting the existing 625 Line ROW with mixed conifer species similar the surrounding area at a ratio of between 250 and 435 trees per acre. The density of planting will be dependent on surrounding habitat characteristics, including slope, aspect, soil type, vegetation, and elevation. SPPCo will employ a certified arborist to oversee all replanting activities.	Replanting trees along the existing 625 Line will partially offset the impacts to habitat and species as a result of the tree removal associated with the new 625 Line. The certified arborist will ensure that the replanting activities are correctly implemented.	✓					
Cultural Resources								
APM-CUL-01	If impacts to Site CA-PLA-6 cannot be avoided, a detailed data recovery plan that follows the Secretary of the Interior's standards and guidelines will be developed for the portions of the site that will be impacted by construction activities. The plan will be presented for review and comment to the State Historic Preservation Officer (SHPO) before implementation. Data recovery excavations will be sufficient to reduce impacts to a less-than-significant level. Work on USFS land will require an ARPA permit from the USFS. SPPCo will consult with the Washoe Tribe of Nevada and California prior to conducting any excavation work.	Implementing a recovery plan that is consistent with the Secretary of the Interior's standards and guidelines, obtaining the proper permits, and consulting with relevant Native American tribal representatives will ensure CA-PLA-6 (a Native American habitation site) is appropriately recovered.			✓			

APM Number	Description	Justification	Project Component					
			Existing 625 Line	New 625 Line	650 Line	132/650 Line Double-Circuit	Northstar Fold	Substations and Switching Stations
APM-CUL-02	If impacts to unevaluated resources cannot be avoided, a detailed test excavation plan and research design that follows the Secretary of the Interior's standards and guidelines will be developed to evaluate the sites that will be impacted. The plan and research design will be presented to the SHPO for review and comment before implementation. If the sites are determined ineligible to the National Register or the California Register (with concurrence from the SHPO), they will require no further consideration. If any of the resources are determined eligible to either registers (with concurrence from the SHPO), a detailed data recovery plan will be developed for those resources, and presented to the SHPO for review and comment. Data recovery excavations will be sufficient to reduce impacts to the resources to the less-than-significant level. Work on USFS land will require an ARPA permit from the USFS. SPPCo will consult with the Washoe Tribe of Nevada and California prior to conducting any excavation work.	If unevaluated resources cannot be avoided, this measure ensures that they are evaluated per the Secretary of Interior's standards and guidelines, and in coordination with the SHPO. This measure also defines the procedures to follow for both eligible and ineligible sites, and requires the SHPO's concurrence with the determination.	✓	✓	✓	✓	✓	✓
APM-CUL-03	If impacts to the linear historic-era resources cannot be avoided during project activities, they will be evaluated by a qualified historical archaeologist (under a Forest Service ARPA permit). If the sites are determined ineligible to the National Register or the California Register (with concurrence from the SHPO), they will require no further consideration. If any of the resources are determined eligible to either register (with concurrence from the SHPO), a detailed treatment plan will be developed for those resources, and presented to the SHPO for review and comment. Treatment will include additional archival research and/or field recordation.	Several identified historic-era sites require more detailed analysis if they cannot be avoided. This measure requires a detailed treatment plan for those resources that are determined to be eligible for listing on historic registers.		✓	✓	✓	✓	
APM-CUL-04	If fossils or other paleontological resources are encountered during construction, all work will be halted within a 30-foot radius of the finding and a qualified paleontologist will be contacted to examine the find and evaluate its significance. If the find is deemed to have scientific value, the paleontologist and SPPCo will formulate a plan to either avoid impacts or to continue construction without disturbing the integrity of the find (e.g., by carefully excavating the material containing the resources under the direction of the paleontologist).	The measure will ensure that impacts to paleontological resources encountered during construction are avoided or the resources are properly evaluated and/or recovered by a qualified individual.	✓	✓	✓	✓	✓	✓

APM Number	Description	Justification	Project Component					
			Existing 625 Line	New 625 Line	650 Line	132/650 Line Double-Circuit	Northstar Fold	Substations and Switching Stations
APM-CUL-05	If human remains are discovered, all work within 50 feet of the discovery site will halt immediately. SPPCo will notify the County Coroner, as stipulated in Section 7050.5 of the California Health and Safety Code. The Coroner will determine whether the remains are Native American and, if so, will contact the Native American Heritage Commission by telephone within 24 hours. The Commission will follow the stipulations in Section 5097.98 of the California Public Resources Code, including notification of those persons it believes to be most likely descended from the deceased Native American. If the Commission is unable to identify a descendant, the descendant is unable to make a recommendation, or the landowner rejects the recommendation, the Commission will mediate any dispute between the parties. Where such mediation fails to provide measures acceptable to the landowner, the landowner shall reinter the human remains and associated funerary items with appropriate dignity on the property, in a location not subject to further subsurface disturbance.	The measure will ensure that human remains encountered during construction are treated in consistence with applicable laws and regulations.	✓	✓	✓	✓	✓	✓
APM-CUL-06	Prior to any tree removal activities occurring outside of the 90-foot-wide cultural resources survey corridor (with the exception of previously surveyed staging areas and stringing sites), a cultural resources survey of the area will be performed by a professional archaeologist to ensure no known resources would be impacted. If cultural resources are discovered, they will be treated consistent with APM-CUL-02.	Should tree removal be required outside of previously surveyed areas, this measure will ensure that the area is surveyed for cultural resources so that known cultural resources are avoided. In the event that unevaluated resources cannot be avoided, this measure will ensure their proper evaluation and treatment.	✓	✓	✓	✓	✓	✓
Geology, Soils, and Seismicity								
APM-GEO-01	A registered professional geologist or engineer will conduct a geotechnical analysis and prepare a Geotechnical Report that will be used to develop the final design of all project components to ensure that the potential for landslides, slope instability, seismic events, and all applicable codes and seismic standards are adequately addressed in the design and construction of the project. The final design will be reviewed and approved by a Professional Engineer registered in the State of California prior to construction.	This measure ensures that site-specific conditions are considered in the final design of the project and requires documentation from a Professional Engineer that the project design meets all applicable regulations and safety standards.	✓	✓	✓	✓	✓	✓

APM Number	Description	Justification	Project Component					
			Existing 625 Line	New 625 Line	650 Line	132/650 Line Double-Circuit	Northstar Fold	Substations and Switching Stations
Hazards and Hazardous Materials								
APM-HAZ-01	Prior to construction, all SPPCo, contractor, and subcontractor project personnel will receive training regarding the appropriate work practices necessary to effectively implement the APMs to comply with the applicable environmental laws and regulations associated with hazardous materials.	This measure will reduce the potential of an accidental release of hazardous materials, ensure proper clean-up and handling of spilled material, as well as reduce unnecessary exposure of hazardous materials to workers and the public by training project personnel on appropriate work practices.	✓	✓	✓	✓	✓	✓
APM-HAZ-02	Phase I and Phase II environmental site assessments (ESAs) will be conducted on the existing Brockway Substation parcel to determine if there is any surface or subsurface contamination. If contamination is found to be present, remediation will occur in accordance with recommendations of the Phase II ESA and all applicable federal, state, and local regulations.	Phase I and Phase II ESAs will ensure that future use of the Brockway Substation parcel will not result in a significant hazard to the public or the environment from unknown contaminated soils.						✓[21]
APM-HAZ-03	During the Brockway Substation decommissioning process, the existing equipment to be removed will be tested in accordance with federal, state, and local standards to determine appropriate recycle, reuse, or disposal alternatives.	This measure ensures that workers and the public are not exposed to hazardous materials, such as asbestos or lead, during the decommissioning and removal of the Brockway Substation. In addition, it requires the recycling or reuse of materials where feasible.						✓[21]
APM-HAZ-04	SPPCo will coordinate with the Foothill Airport Land Use Commission (ALUC) to obtain approval of the height increase for the 132/650 Line Double-Circuit and the 650 Line in order to ensure that the project will not create a new airport hazard in accordance with the Truckee-Tahoe ALUC Plan.	The measure requires coordination, communication, and approval of the height increase for the 132/650 Line Double-Circuit and the 650 Line, to ensure that the project will not conflict with the ALUC Plan and that an airport safety hazard will not result.			✓	✓		
APM-HAZ-05	Prior to construction, SPPCo will prepare a Fire Suppression and Prevention Plan that will discuss necessary fire equipment to be stored at the project staging areas, appropriate protective wear, preconstruction and construction fire prevention measures, fire-fighting methods, and notification procedures in the event of a fire. This plan will be submitted to the USFS and TRPA for review and approval prior to the start of construction.	This measure will reduce the potential to start a wildland fire during construction of the project.	✓	✓	✓	✓	✓	✓
APM-HAZ-06	Smoking will only be allowed in designated cleared areas or enclosed vehicles to reduce the potential for wildfires.	This measure will reduce the potential to start a wildland fire during construction of the project.	✓	✓	✓	✓	✓	✓

[21] APM-HAZ-02 and APM-HAZ-03 apply only to the Brockway Substation.

APM Number	Description	Justification	Project Component					
			Existing 625 Line	New 625 Line	650 Line	132/650 Line Double-Circuit	Northstar Fold	Substations and Switching Stations
Hydrology and Water Quality								
APM-HYD-01	All refueling will be conducted at least 100 feet away from waterways, within designated refueling stations. If refueling within 100 feet of a waterway is unavoidable, SPPCo will ensure that spill kits are on site, install secondary containment to control accidental spills, and notify an environmental monitor prior to fueling. Environmental monitors will regularly inspect refueling areas in order to ensure that proper measures are being implemented in accordance with the project's SWPPP and SPCC Plan.	This measure will ensure that impacts to waterways as a result of accidental spills are avoided during the refueling of equipment. It includes inspections to ensure proper implementation and compliance with the SWPPP and SPCC Plan.	✓	✓	✓	✓	✓	✓
APM-HYD-02	All concrete washouts will be conducted either into excavations where the concrete was poured, within designated concrete washout areas, or will be captured using a washout-recycling system. Crews will not be allowed to dispose of concrete directly onto the ground.	Because the use of concrete near aquatic resources has the potential to affect water quality by increasing the pH levels, this measure will ensure proper handling and disposal of concrete so that it does not contribute to water quality degradation.	✓	✓	✓	✓	✓	✓
APM-HYD-03	Where feasible, all stormwater or groundwater within excavations will be discharged overland into well-vegetated areas to promote the settling of sediment.	This measure is intended to ensure that dewatering activities do not increase the potential for sedimentation and degradation of aquatic resources.	✓	✓	✓	✓		
APM-HYD-04	When working near aquatic resources, poles and trees will be cut by hand and felled away from such features. The skidding of poles and trees through aquatic resources will be avoided to the extent feasible. Vehicles and equipment will be staged away from these features, along designated access routes or within staging areas. In instances where aquatic features are unavoidable, no trees or poles will be skidded through streams unless they are dry or lined with snow at the time of crossing. If skidding occurs in dry or snow-covered streams, SPPCo will restore the banks and channels to preconstruction conditions immediately afterwards. An environmental monitor will be present in all instances in which trees or poles must be skidded through an aquatic feature to ensure that impacts to resources are minimized and that water is not present. All skidding within dry or snow-covered features will be documented by the biological monitor.	This measure will reduce potential temporary impacts to aquatic resources and existing drainage patterns during construction by mandating avoidance and/or restoration of the resources. By requiring the presence of an environmental monitor, SPPCo will ensure that impacts are avoided where possible, that activities are documented, and that these features are adequately restored.	✓	✓	✓	✓		
APM-HYD-05	When construction activities are required adjacent to flowing streams or rivers, work will be conducted during low-flow conditions.	This measure minimizes potential water quality impacts from sedimentation and erosion that could occur if work is conducted within close proximity to flowing waterbodies. In low-flow conditions, the distance between the water and the work area will increase, thereby reducing the potential for water quality degradation.	✓	✓	✓	✓		

APM Number	Description	Justification	Project Component					
			Existing 625 Line	New 625 Line	650 Line	132/650 Line Double-Circuit	Northstar Fold	Substations and Switching Stations
APM-HYD-06	In areas where topsoil has not been salvaged, construction activities will be limited when the environmental monitor determines that the soil is too wet to adequately support vehicles and equipment. Where soil conditions are deemed too wet to work, one of the following measures will apply: • Access will be limited to the minimum area feasible for construction. Where possible, vehicles and equipment will be routed around wet areas so long as the re-route does not cross into sensitive resource areas. • If wet areas cannot be avoided and soil moisture is too high to strip topsoil, BMPs, including the use of wide-track or low ground pressure equipment or installation of prefabricated equipment pads or timber mats, will be implemented for use in these areas to minimize rutting and off-site sedimentation.	The measure will minimize rutting and associated damage to topsoil.	✓	✓	✓	✓	✓	✓
APM-HYD-07	SPPCo will minimize vehicle and equipment usage within stream channels and other aquatic resources to only those pieces of equipment required for tree removal or to establish access. SPPCo will construct shoo-fly access roads to access either side of the resource or utilize existing bridges, where feasible, in order to cross these features to minimize the need to install temporary bridges. If there are no existing crossings and the construction of shoo-fly roads may cause greater resource impact, SPPCo will install timber mats or other materials suitable for a temporary bridge. If bridges are installed over streams with discernable flow, all attempts will be made to span the channel.	This measure will minimize impacts to aquatic resources and water quality by avoiding stream channels and other aquatic resources whenever possible. If aquatic resources cannot be avoided, this measure ensures that temporary impacts from project construction will not substantially alter existing drainage patterns.	✓	✓	✓	✓		
APM-HYD-08	SPPCo will obtain permits from appropriate regulatory agencies prior to commencing work in waters of the U.S. or waters of the state. Following construction, SPPCo will restore any impacted waterbodies and wetlands to pre-project conditions and compensate for any permanent wetland impacts in accordance with the U.S. Army Corps of Engineer's "no net loss" policy.	This measure will also ensure that there is no net loss of waters of the U.S or waters of the state by requiring compensation for permanent wetland losses.	✓	✓	✓	✓	✓	

APM Number	Description	Justification	Project Component					
			Existing 625 Line	New 625 Line	650 Line	132/650 Line Double-Circuit	Northstar Fold	Substations and Switching Stations
Noise								
APM-NOI-01	SPPCo will provide notice of construction to all property owners within 300 feet of the project by mail at least 1 week prior to the start of construction activities. The announcement will state the construction start date, anticipated completion date, hours of operation, and the project's website where questions can be asked and complaints can be received.	This measure will ensure proper notice of residents in the vicinity of the project so they can be prepared for the construction activities that will occur nearby. The measure will also provide residents with a vehicle by which they can resolve noise-related issues and assist in ensuring compliance.	✓	✓	✓	✓	✓	✓
APM-NOI-02	SPPCo will post a telephone number for excessive noise complaints in conspicuous locations in the vicinity of the project site when within 1,000 feet of residences.	The measure will provide residents with a vehicle by which they can notify SPPCo of noise-related issues so that SPPCo can work to resolve any issues.	✓	✓	✓	✓	✓	✓
APM-NOI-03	SPPCo will designate a Disturbance Coordinator, who will be responsible for responding to any local complaints about construction noise. The Disturbance Coordinator will determine the nature of the noise complaint and will propose reasonable measures to correct the problem.	The measure provides residents a vehicle by which they can notify SPPCo of noise-related issues. A designated Disturbance Coordinator will provide a single point of contact for residents to ensure that noise-related complaints and issues are resolved.	✓	✓	✓	✓	✓	✓
APM-NOI-04	Construction activities will occur during the times established by local ordinances—6:00 a.m. to 8:00 p.m. Monday through Friday and 8:00 a.m. to 8:00 p.m. Saturday and Sunday in Placer County and 7:00 a.m. to 9:00 p.m. Monday through Saturday and 9:00 a.m. to 6:00 p.m. on Sunday in the Town of Truckee—with the exception of certain activities where nighttime construction activities are necessary. These activities include, but are not limited to, the delivery of substation transformers, filling of substation transformers, system transfers, pouring of foundations, and pulling of the conductor across major roadways, which require continuous operation or must be conducted during off-peak hours per agency requirements.	This measure is intended to ensure that the project complies with the noise regulations contained within Placer County Municipal Code and the Town of Truckee Development Code.	✓	✓	✓	✓	✓	✓
APM-NOI-05	All internal combustion-engine driven equipment will be equipped with intake and exhaust mufflers that are in good condition and appropriate for the equipment.	Intake and exhaust mufflers will reduce the overall noise levels associated with construction equipment.	✓	✓	✓	✓	✓	✓
APM-NOI-06	Stationary noise-generating equipment will be located as far as possible from sensitive receptors when they adjoin or are within 1,000 feet of a construction area.	Maximizing the distance between stationary noise-generating equipment (e.g., generators) and sensitive receptors will reduce noise exposure for the receptors.	✓	✓	✓	✓	✓	✓
APM-NOI-07	Quiet air compressors and other stationary equipment will be utilized when possible within the Town of Truckee limits.	This measure is intended to comply with the noise regulations contained in the Town of Truckee Development Code.				✓		✓
APM-NOI-08	Helicopter flight patterns will be designed to avoid and minimize flights over residential areas to the extent practical.	Minimizing helicopter flights over residential areas will reduce noise exposure for sensitive receptors.	✓	✓	✓	✓	✓	

APM Number	Description	Justification	Project Component					
			Existing 625 Line	New 625 Line	650 Line	132/650 Line Double-Circuit	Northstar Fold	Substations and Switching Stations
Recreation								
APM-REC-01	A public-liaison will be assigned by SPPCo to provide the public with advance notification of construction activities at least 15 days prior to the start of construction activities. A project website will be developed for the public to ask questions about the construction process and schedule. Concerns related to dust, noise, odor, trail closures, and access restrictions associated with construction activities will be addressed within this program.	A designated public liaison will ensure that the public is notified of construction activities and has a point-of-contact for information. The project website will further aid in information dissemination regarding any trails or recreational facilities that might be temporarily impacted by the project. This measure will ensure that the public is aware of alternate recreational facilities that will be accessible during any potential closures as a result of construction activities, thus lessening the potential impact of trail closures.	✓	✓	✓	✓	✓	✓
APM-REC-02	SPPCo will provide the USFS with advance notice of all construction activities within its jurisdiction and affecting recreation areas and trail systems, including temporary trail closures, within the forest. Notification to USFS officials will be provided at least 30 days before construction begins in these areas.	Notifying USFS staff of construction activities in the forest will allow for coordination regarding any regulations or requirements that the USFS may have. USFS staff can also provide the location of and information about potential alternative recreational trails and facilities to the public in order to aid in the implementation of APM-REC-03, thus reducing the impact of trail closures upon recreationists.	✓	✓	✓			✓
APM-REC-03	Signs advising recreationists of construction activities and directing them to alternative trails or bikeways will be posted at all trail access points or in locations as determined through coordination with the respective jurisdictional agencies. Signage describing the closures shall be posted at trail access points one week prior to closures and shall remain posted during the entire closure period.	The signage at trail access points will notify the public of closures and will suggest potential alternative facilities that can be accessed, thus reducing the impact of trail closures.	✓	✓	✓	✓	✓	
APM-REC-04	Where helicopters will be used for construction, signage advising equestrians of the schedule for helicopter use will be posted at all equestrian trail-access points within the vicinity of the flight paths one week prior to helicopter activity. These signs will be checked and maintained daily until helicopter operation in the area ceases.	Horses are particularly sensitive to helicopter noise. This measure will allow the equestrians to avoid helicopter use areas, thus avoiding potential safety issues and impacts to the enjoyment of the activity.	✓	✓	✓		✓	✓
APM-REC-05	Pulling of conductor over the Truckee River will occur during the months of April, October, or November to minimize impacts to rafting operations.	The peak rafting season is May through September. Limiting conductor pulling activities to April, October, or November will reduce impacts to rafting operators and recreational rafters.		✓				
APM-REC-06	SPPCo will coordinate the closure of the Northstar Stables with the facility's manager in advance of construction activities involving the Northstar Tap/Fold. SPPCo will provide adequate financial compensation for the temporary relocation of the horses during construction, should it be necessary, and for any lost revenue as a result of the closure.	Coordination with the management of the Northstar Stables and the provision of financial compensation for any closure will reduce the construction-related impact on the stables.					✓	

ATTACHMENT 3-A: DETAILED ROUTE MAPS

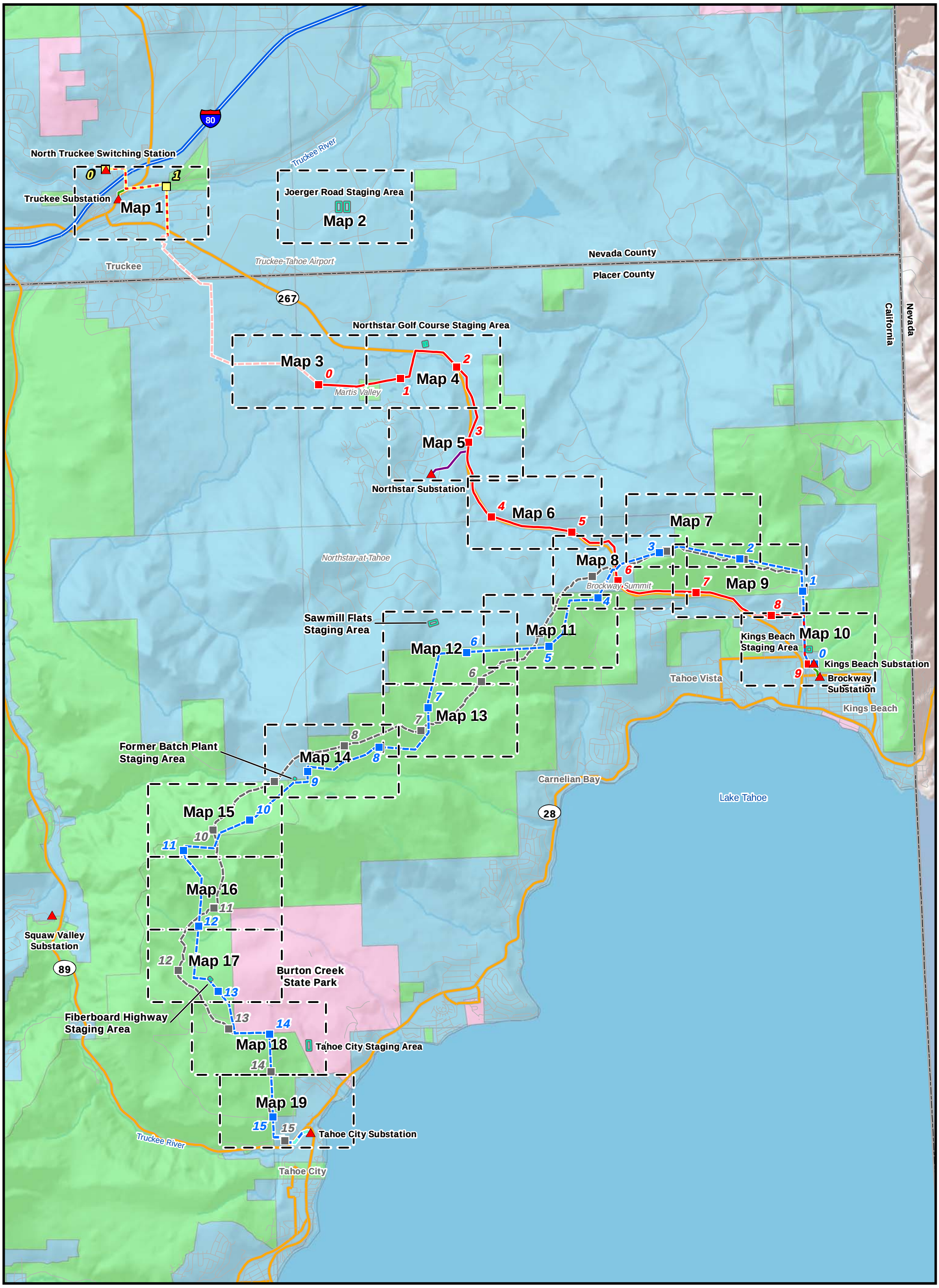

Attachment 3-A: Detailed Route Map Overview

625 and 650 Line Upgrade Project

650 Line to be Removed
Northstar Fold
New 625 Line
Existing 625 Line
625/629 Double-Circuit
650 Line to be Rebuilt
650 Line Previously Upgraded
132/650 Double-Circuit to be Rebuilt

Substation/Switching Station
Milepost (Color Coded by Line)
Map Page

Jurisdiction

US Forest Service
State
Private

Sierra Pacific
INSIGNIA ENVIRONMENTAL

N W E S

1:70,000

0 0.5 1 2 3 4 Miles

Z:\GIS\Projects and Data\California\Projects\NLT\Mxds\PEA\FINAL_DRAFT\Att_3-A_Detailed_RouteMap_OvrView.mxd

3/31/2010

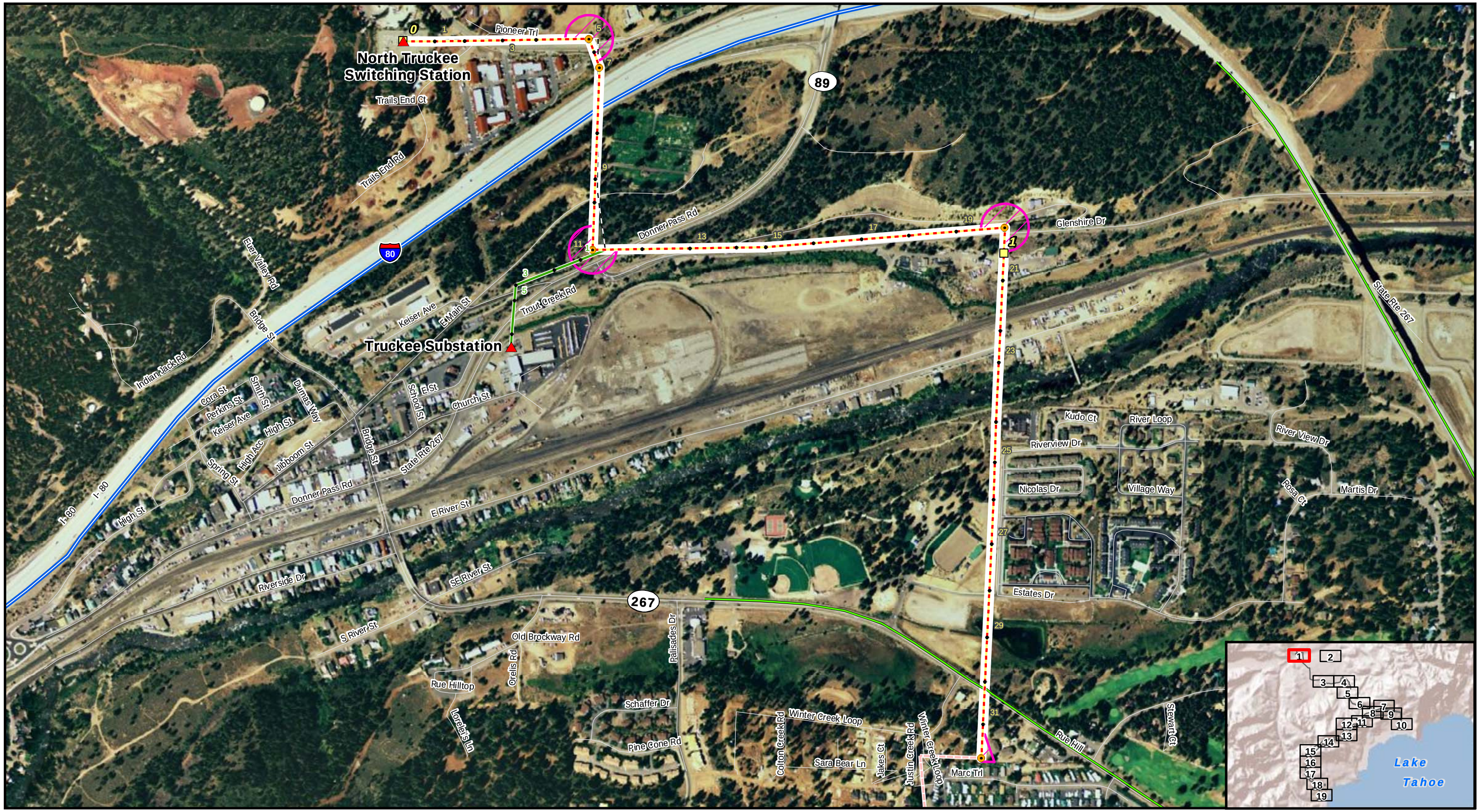

Attachment 3-A: Detailed Route Map 1 of 19

625 and 650 Line Upgrade Project

- New 625 Line
- Existing 625 Line
- 625/629 Double-Circuit
- 650 Line to be Rebuilt
- 650 Line Previously Upgraded
- 132/650 Double-Circuit to be Rebuilt
- 650 Line to be Removed
- Northstar Fold
- Existing Transmission Line Alignment
- Pole
- Self-Supporting Steel Pole
- Milepost (Color Coded by Line)
- Substation/Switching Station
- Staging Area
- Stringing Site
- Right-of-Way*
- Mount Watson Road (Fiberboard Highway)
- New Spur Road
- Dirt Road - No Improvement Needed
- Dirt Road - Improvement Needed
- Paved Road

*The right-of-way is 65 feet wide for all lines except the Existing 625 Line, which is 40 feet wide.

A centerline travel route will be used within the indicated rights-of-way.

Sierra Pacific™

INSIGNIA ENVIRONMENTAL

1:7,000

0 250 500 1,000 1,500 2,000 Feet

N W E S

Z:\GIS\Projects and Data\California\Projects\NLT\Mxds\PEA\FINAL\Att_3-A_Detailed_RouteMap.mxd

6/2/2010

Attachment 3-A: Detailed Route Map 2 of 19

625 and 650 Line Upgrade Project

- New 625 Line
- Existing 625 Line
- 625/629 Double-Circuit
- 650 Line to be Rebuilt
- 650 Line Previously Upgraded
- 132/650 Double-Circuit to be Rebuilt
- 650 Line to be Removed
- Northstar Fold
- Existing Transmission Line Alignment
- Pole
- Self-Supporting Steel Pole
- Milepost (Color Coded by Line)
- Substation/Switching Station
- Staging Area
- Stringing Site
- Right-of-Way*
- Mount Watson Road (Fiberboard Highway)
- New Spur Road
- Dirt Road - No Improvement Needed
- Dirt Road - Improvement Needed
- Paved Road

*The right-of-way is 65 feet wide for all lines except the Existing 625 Line, which is 40 feet wide.

A centerline travel route will be used within the indicated rights-of-way.

Sierra Pacific™

INSIGNIA ENVIRONMENTAL

N W E S

1:7,000

0 250 500 1,000 1,500 2,000 Feet

Z:\GIS\Projects and Data\California\Projects\NLT\Mxds\PEA\FINAL\Att_3-A_Detailed_RouteMap.mxd

6/2/2010

Attachment 3-A: Detailed Route Map 3 of 19

625 and 650 Line Upgrade Project

- New 625 Line
- Existing 625 Line
- 625/629 Double-Circuit
- 650 Line to be Rebuilt
- 650 Line Previously Upgraded
- 132/650 Double-Circuit to be Rebuilt
- 650 Line to be Removed
- Northstar Fold
- Existing Transmission Line Alignment
- Pole
- Self-Supporting Steel Pole
- Milepost (Color Coded by Line)
- Substation/Switching Station
- Staging Area
- Stringing Site
- Right-of-Way*
- Mount Watson Road (Fiberboard Highway)
- New Spur Road
- Dirt Road - No Improvement Needed
- Dirt Road - Improvement Needed
- Paved Road

*The right-of-way is 65 feet wide for all lines except the Existing 625 Line, which is 40 feet wide.

A centerline travel route will be used within the indicated rights-of-way.

Sierra Pacific™

INSIGNIA ENVIRONMENTAL

N W E S

1:7,000

0 250 500 1,000 1,500 2,000 Feet

Z:\GIS\Projects and Data\California\Projects\NLT\Mxds\PEA\FINAL\Att_3-A_Detailed_RouteMap.mxd

6/2/2010

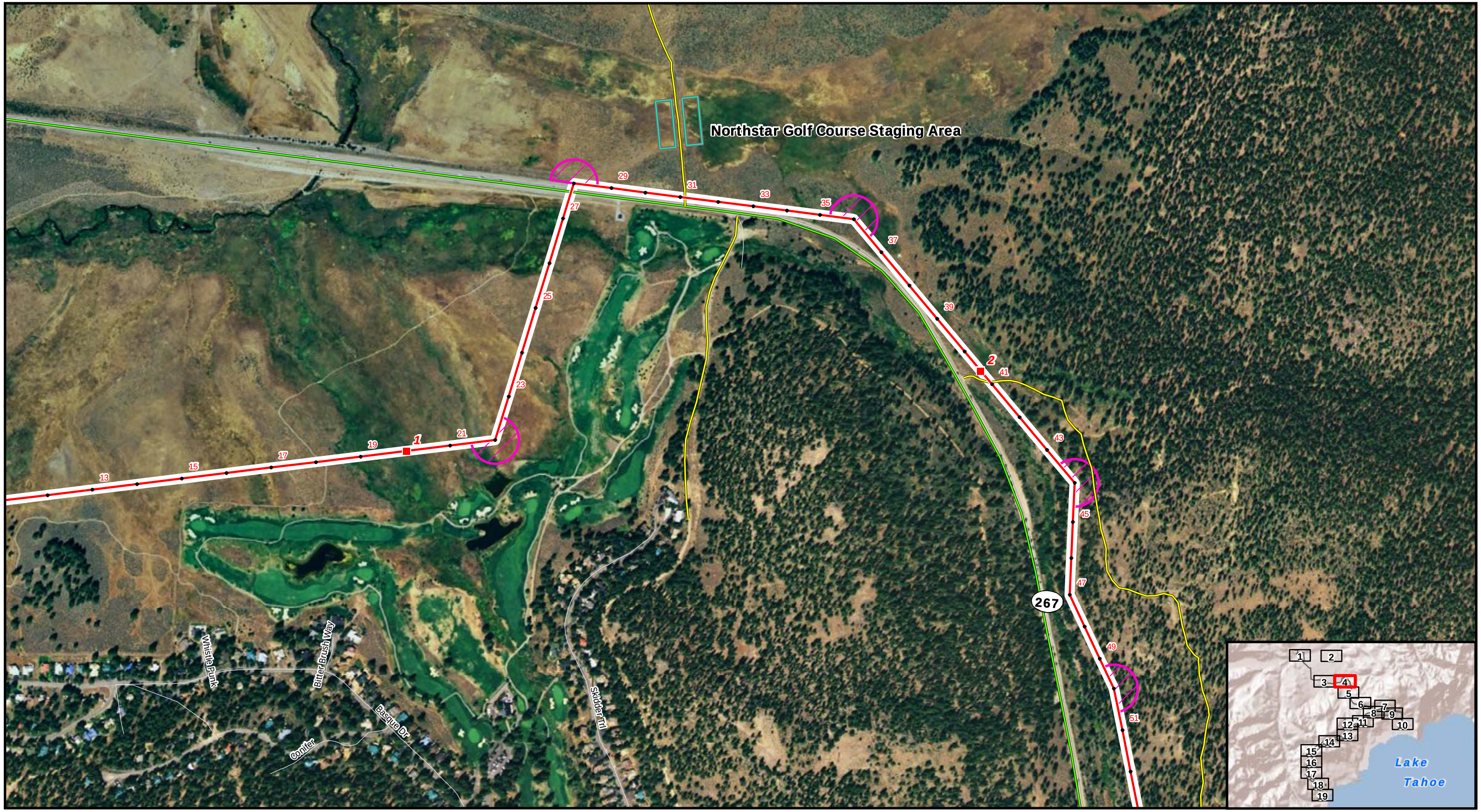

Attachment 3-A: Detailed Route Map 4 of 19

625 and 650 Line Upgrade Project

- New 625 Line
- Existing 625 Line
- 625/629 Double-Circuit
- 650 Line to be Rebuilt
- 650 Line Previously Upgraded
- 132/650 Double-Circuit to be Rebuilt
- 650 Line to be Removed
- Northstar Fold
- Existing Transmission Line Alignment
- Pole
- Self-Supporting Steel Pole
- Milepost (Color Coded by Line)
- Substation/Switching Station
- Staging Area
- Stringing Site
- Right-of-Way*
- Mount Watson Road (Fiberboard Highway)
- New Spur Road
- Dirt Road - No Improvement Needed
- Dirt Road - Improvement Needed
- Paved Road

*The right-of-way is 65 feet wide for all lines except the Existing 625 Line, which is 40 feet wide.

A centerline travel route will be used within the indicated rights-of-way.

Sierra Pacific™

INSIGNIA ENVIRONMENTAL

N W E S

1:7,000

0 250 500 1,000 1,500 2,000 Feet

Z:\GIS\Projects and Data\California\Projects\NLT\Mxds\PEA\FINAL\Att_3-A_Detailed_RouteMap.mxd

6/2/2010

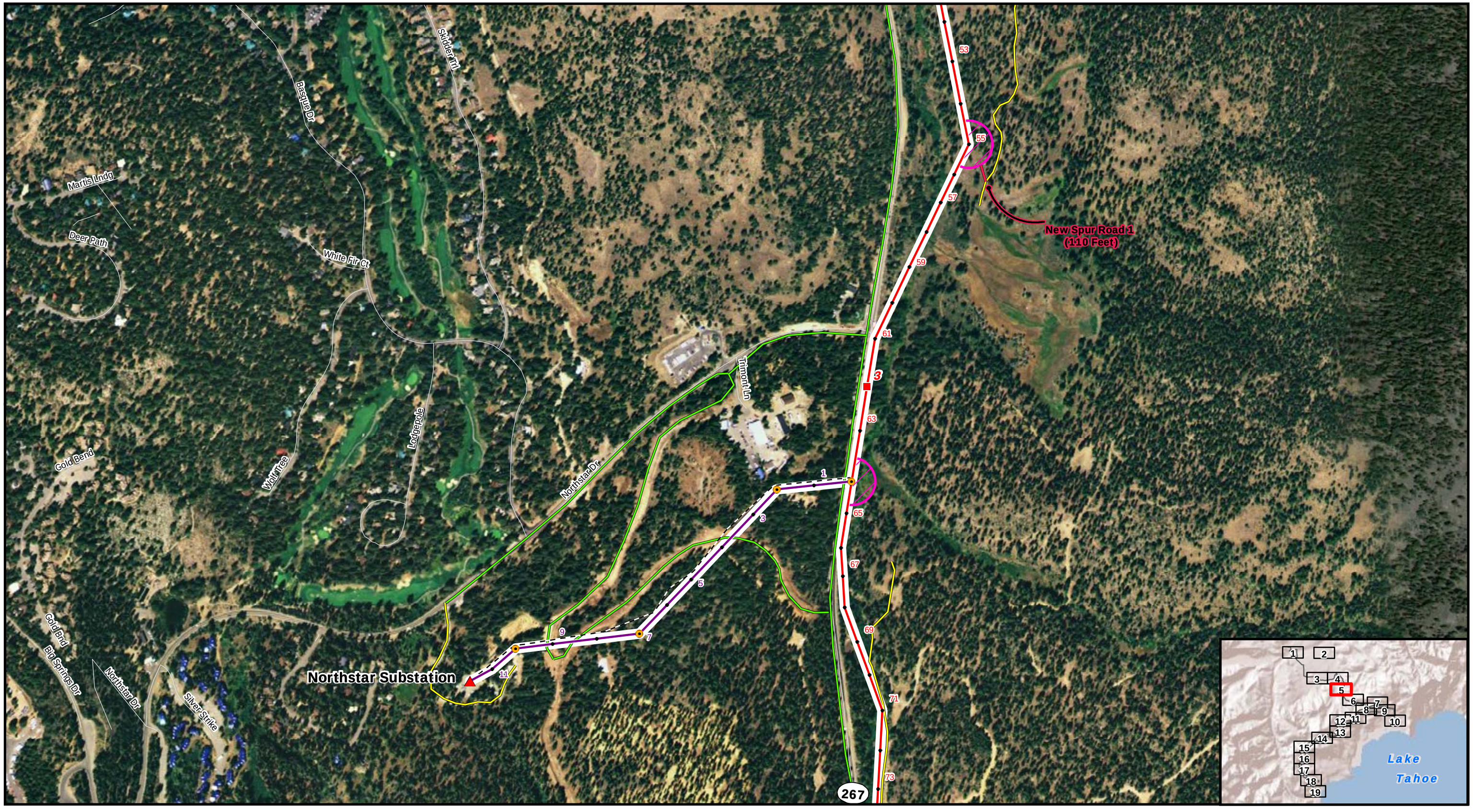

Attachment 3-A: Detailed Route Map 5 of 19

625 and 650 Line Upgrade Project

- New 625 Line
- Existing 625 Line
- 625/629 Double-Circuit
- 650 Line to be Rebuilt
- 650 Line Previously Upgraded
- 132/650 Double-Circuit to be Rebuilt
- 650 Line to be Removed
- Northstar Fold
- Existing Transmission Line Alignment
- Pole
- Self-Supporting Steel Pole
- Milepost (Color Coded by Line)
- Substation/Switching Station
- Staging Area
- Stringing Site
- Right-of-Way*
- Mount Watson Road (Fiberboard Highway)
- New Spur Road
- Dirt Road - No Improvement Needed
- Dirt Road - Improvement Needed
- Paved Road

*The right-of-way is 65 feet wide for all lines except the Existing 625 Line, which is 40 feet wide.

A centerline travel route will be used within the indicated rights-of-way.

Sierra Pacific™

INSIGNIA ENVIRONMENTAL

N W E S

1:7,000

0 250 500 1,000 1,500 2,000 Feet

Z:\GIS\Projects and Data\California\Projects\NLT\Mxds\PEA\FINAL\Att_3-A_Detailed_RouteMap.mxd

6/2/2010

Attachment 3-A: Detailed Route Map 6 of 19

625 and 650 Line Upgrade Project

- New 625 Line
- Existing 625 Line
- 625/629 Double-Circuit
- 650 Line to be Rebuilt
- 650 Line Previously Upgraded
- 132/650 Double-Circuit to be Rebuilt
- 650 Line to be Removed
- Northstar Fold
- Existing Transmission Line Alignment
- Pole
- Self-Supporting Steel Pole
- Milepost (Color Coded by Line)
- Substation/Switching Station
- Staging Area
- Stringing Site
- Right-of-Way*
- Mount Watson Road (Fiberboard Highway)
- New Spur Road
- Dirt Road - No Improvement Needed
- Dirt Road - Improvement Needed
- Paved Road

*The right-of-way is 65 feet wide for all lines except the Existing 625 Line, which is 40 feet wide.

A centerline travel route will be used within the indicated rights-of-way.

Sierra Pacific™

INSIGNIA ENVIRONMENTAL

N W E S

1:7,000

0 250 500 1,000 1,500 2,000 Feet

Z:\GIS\Projects and Data\California\Projects\NLT\Mxds\PEA\FINAL\Att_3-A_Detailed_RouteMap.mxd

6/2/2010

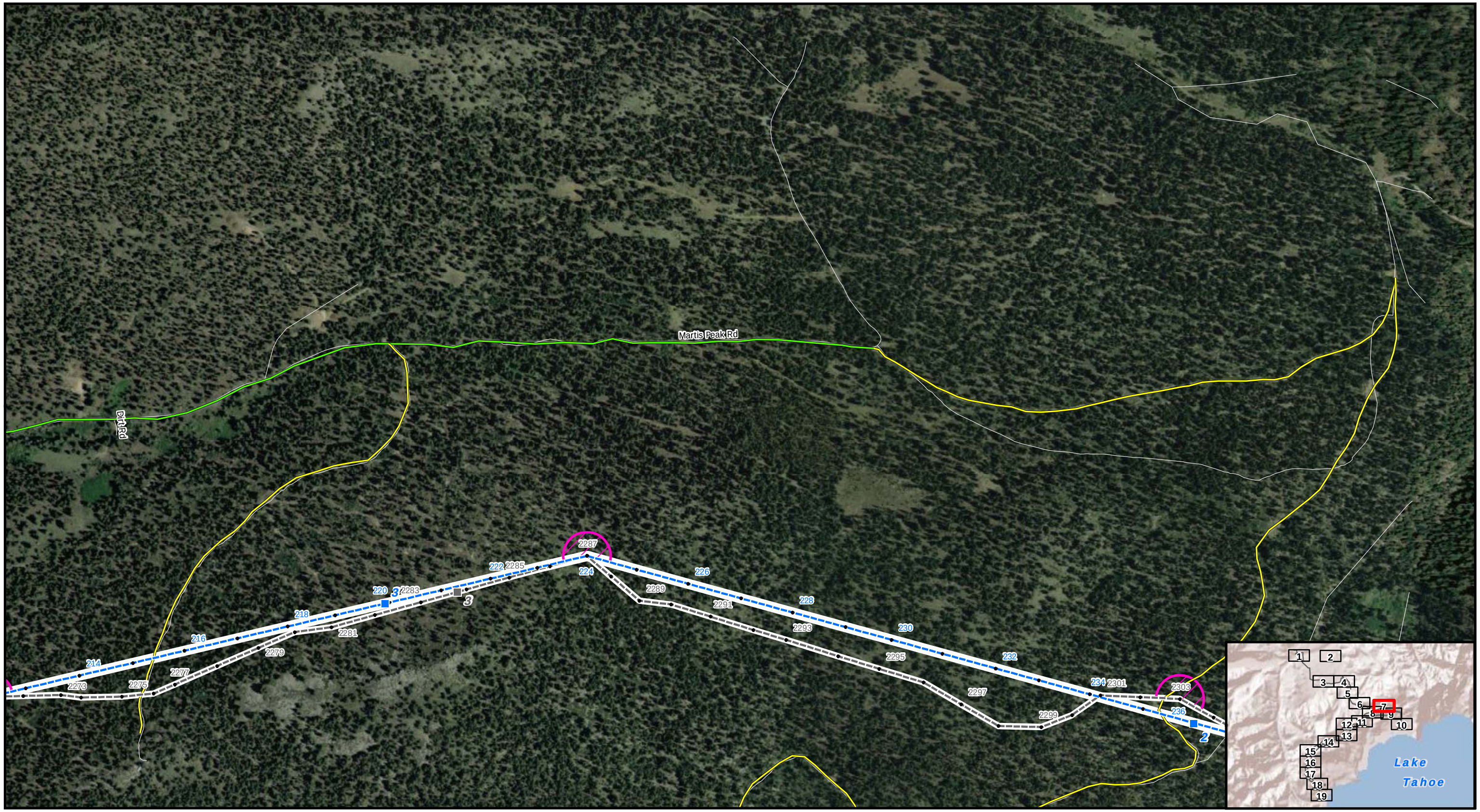

Attachment 3-A: Detailed Route Map 7 of 19

625 and 650 Line Upgrade Project

- New 625 Line
- Existing 625 Line
- 625/629 Double-Circuit
- 650 Line to be Rebuilt
- 650 Line Previously Upgraded
- 132/650 Double-Circuit to be Rebuilt
- 650 Line to be Removed
- Northstar Fold
- Existing Transmission Line Alignment
- Pole
- Self-Supporting Steel Pole
- Milepost (Color Coded by Line)
- Substation/Switching Station
- Staging Area
- Stringing Site
- Right-of-Way*
- Mount Watson Road (Fiberboard Highway)
- New Spur Road
- Dirt Road - No Improvement Needed
- Dirt Road - Improvement Needed
- Paved Road

*The right-of-way is 65 feet wide for all lines except the Existing 625 Line, which is 40 feet wide.

A centerline travel route will be used within the indicated rights-of-way.

Sierra Pacific™

INSIGNIA ENVIRONMENTAL

N W E S

1:7,000

0 250 500 1,000 1,500 2,000 Feet

Z:\GIS\Projects and Data\California\Projects\NLT\Mxds\PEA\FINAL\Att_3-A_Detailed_RouteMap.mxd

6/2/2010

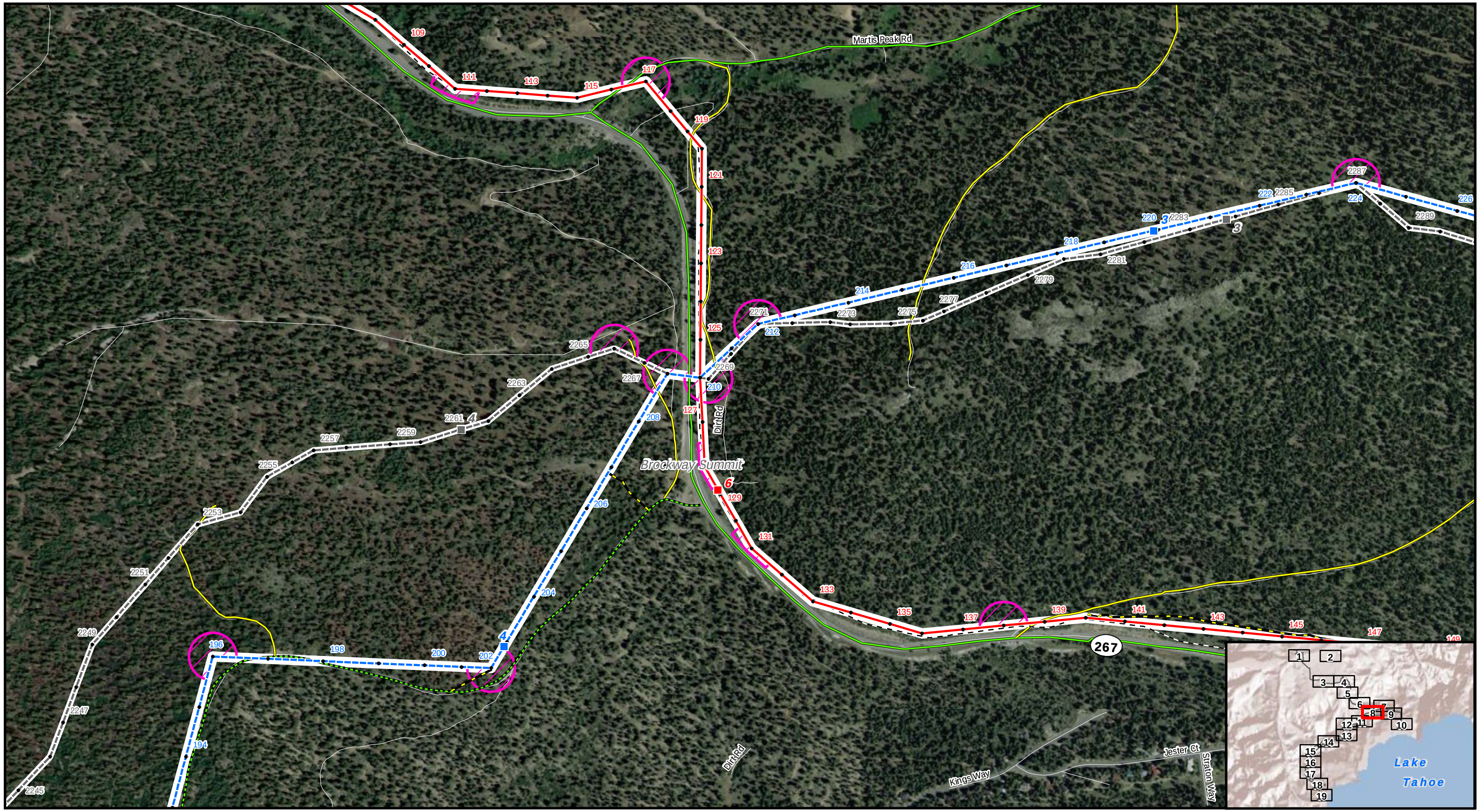

Attachment 3-A: Detailed Route Map 8 of 19

625 and 650 Line Upgrade Project

- New 625 Line
- Existing 625 Line
- 625/629 Double-Circuit
- 650 Line to be Rebuilt
- 650 Line Previously Upgraded
- 132/650 Double-Circuit to be Rebuilt
- 650 Line to be Removed
- Northstar Fold
- Existing Transmission Line Alignment
- Pole
- Self-Supporting Steel Pole
- Milepost (Color Coded by Line)
- Substation/Switching Station
- Staging Area
- Stringing Site
- Right-of-Way*
- Mount Watson Road (Fiberboard Highway)
- New Spur Road
- Dirt Road - No Improvement Needed
- Dirt Road - Improvement Needed
- Paved Road

*The right-of-way is 65 feet wide for all lines except the Existing 625 Line, which is 40 feet wide.

A centerline travel route will be used within the indicated rights-of-way.

Sierra Pacific

INSIGNIA ENVIRONMENTAL

N W E S

1:7,000

0 250 500 1,000 1,500 2,000 Feet

Z:\GIS\Projects and Data\California\Projects\NLT\Mxds\PEA\FINAL\Att_3-A_Detailed_RouteMap.mxd

6/2/2010

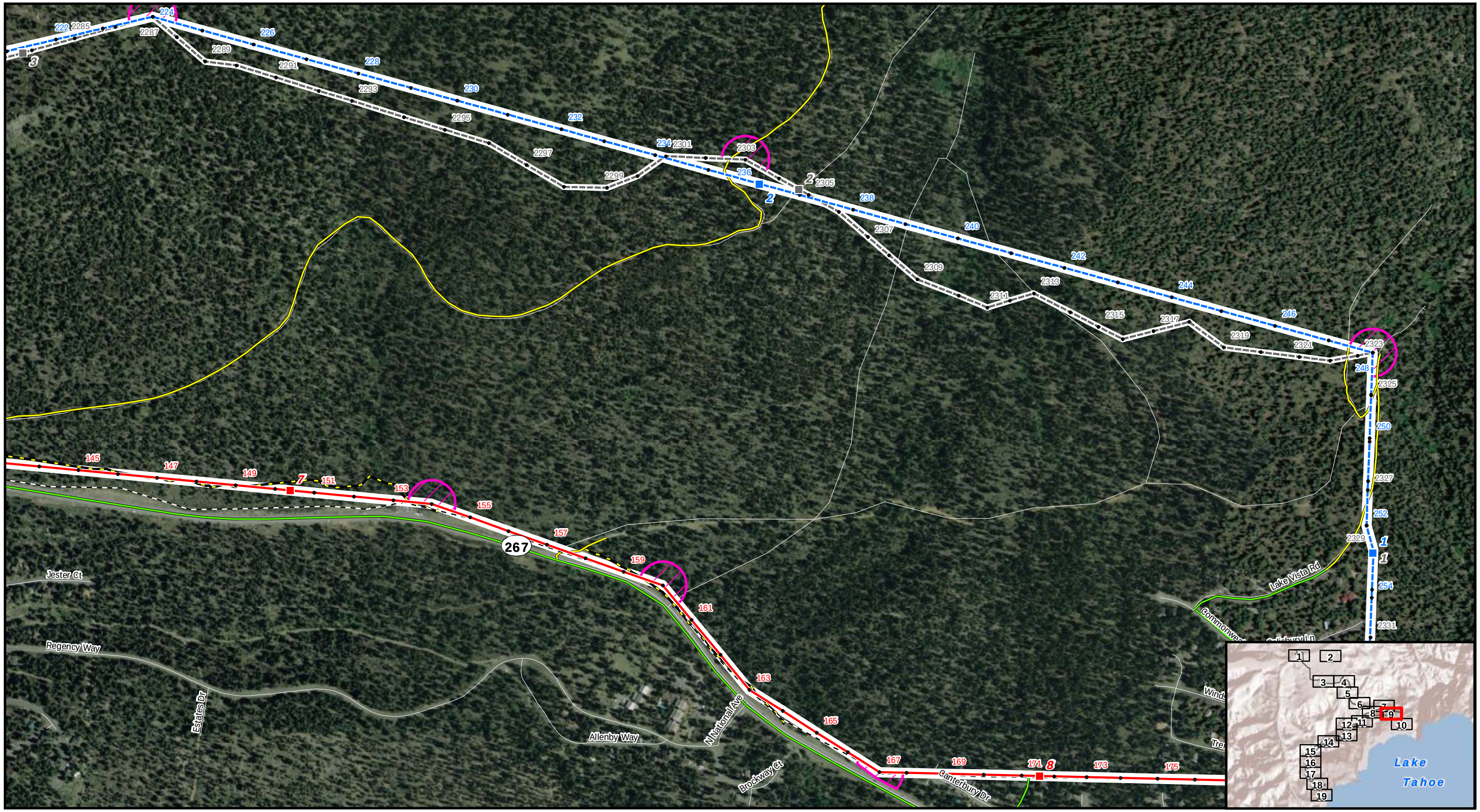

Attachment 3-A: Detailed Route Map 9 of 19

625 and 650 Line Upgrade Project

- New 625 Line
- Existing 625 Line
- 625/629 Double-Circuit
- 650 Line to be Rebuilt
- 650 Line Previously Upgraded
- 132/650 Double-Circuit to be Rebuilt
- 650 Line to be Removed
- Northstar Fold
- Existing Transmission Line Alignment
- Pole
- Self-Supporting Steel Pole
- Milepost (Color Coded by Line)
- Substation/Switching Station
- Staging Area
- Stringing Site
- Right-of-Way*
- Mount Watson Road (Fiberboard Highway)
- New Spur Road
- Dirt Road - No Improvement Needed
- Dirt Road - Improvement Needed
- Paved Road

*The right-of-way is 65 feet wide for all lines except the Existing 625 Line, which is 40 feet wide.

A centerline travel route will be used within the indicated rights-of-way.

Sierra Pacific™

INSIGNIA ENVIRONMENTAL

1:7,000

0 250 500 1,000 1,500 2,000 Feet

N W E S

Z:\GIS\Projects and Data\California\Projects\NLT\Mxds\PEA\FINAL\Att_3-A_Detailed_RouteMap.mxd

6/2/2010

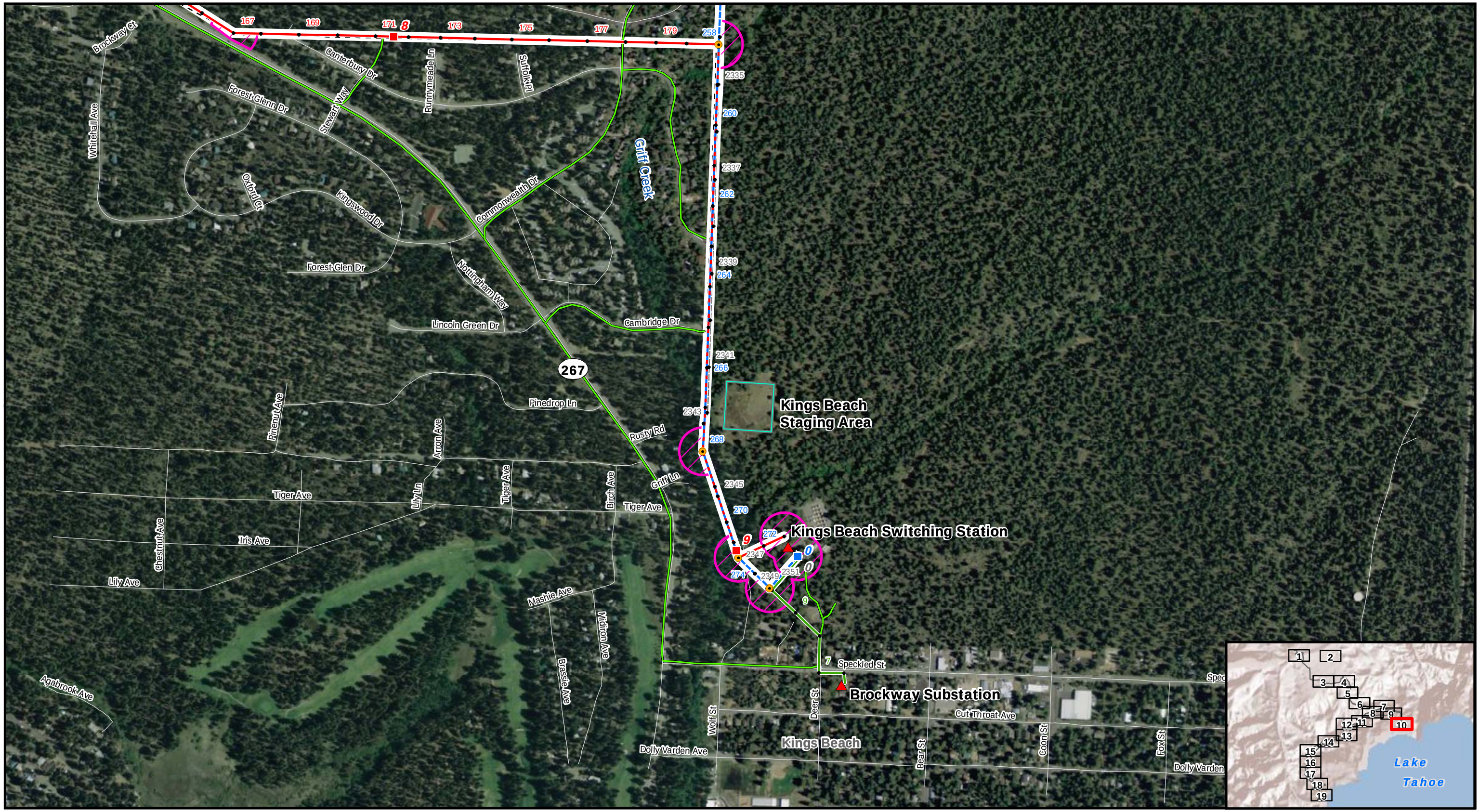

Attachment 3-A: Detailed Route Map 10 of 19

625 and 650 Line Upgrade Project

- New 625 Line
- Existing 625 Line
- 625/629 Double-Circuit
- 650 Line to be Rebuilt
- 650 Line Previously Upgraded
- 132/650 Double-Circuit to be Rebuilt
- 650 Line to be Removed
- Northstar Fold
- Existing Transmission Line Alignment
- Pole
- Self-Supporting Steel Pole
- Milepost (Color Coded by Line)
- Substation/Switching Station
- Staging Area
- Stringing Site
- Right-of-Way*
- Mount Watson Road (Fiberboard Highway)
- New Spur Road
- Dirt Road - No Improvement Needed
- Dirt Road - Improvement Needed
- Paved Road

*The right-of-way is 65 feet wide for all lines except the Existing 625 Line, which is 40 feet wide.

A centerline travel route will be used within the indicated rights-of-way.

Sierra Pacific™

INSIGNIA ENVIRONMENTAL

1:7,000

0 250 500 1,000 1,500 2,000 Feet

Z:\GIS\Projects and Data\California\Projects\NLT\Mxds\PEA\FINAL\Att_3-A_Detailed_RouteMap.mxd

6/2/2010

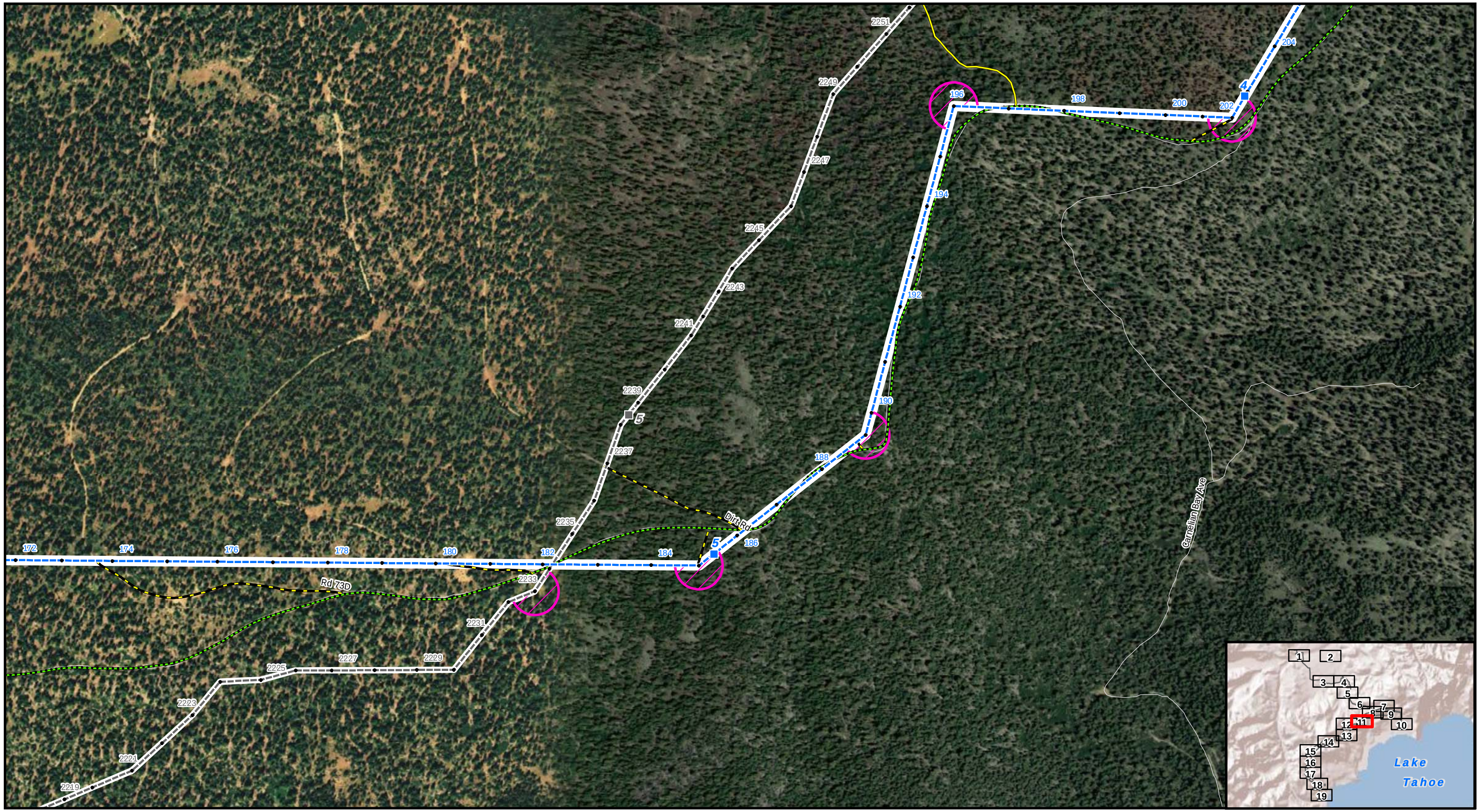

Attachment 3-A: Detailed Route Map 11 of 19

625 and 650 Line Upgrade Project

- New 625 Line
- Existing 625 Line
- 625/629 Double-Circuit
- 650 Line to be Rebuilt
- 650 Line Previously Upgraded
- 132/650 Double-Circuit to be Rebuilt
- 650 Line to be Removed
- Northstar Fold
- Existing Transmission Line Alignment
- Pole
- Self-Supporting Steel Pole
- Milepost (Color Coded by Line)
- Substation/Switching Station
- Staging Area
- Stringing Site
- Right-of-Way*
- Mount Watson Road (Fiberboard Highway)
- New Spur Road
- Dirt Road - No Improvement Needed
- Dirt Road - Improvement Needed
- Paved Road

*The right-of-way is 65 feet wide for all lines except the Existing 625 Line, which is 40 feet wide.

A centerline travel route will be used within the indicated rights-of-way.

Sierra Pacific™

INSIGNIA ENVIRONMENTAL

N W E S

1:7,000

0 250 500 1,000 1,500 2,000 Feet

Z:\GIS\Projects and Data\California\Projects\NLT\Mxds\PEA\FINAL\Att_3-A_Detailed_RouteMap.mxd

6/2/2010

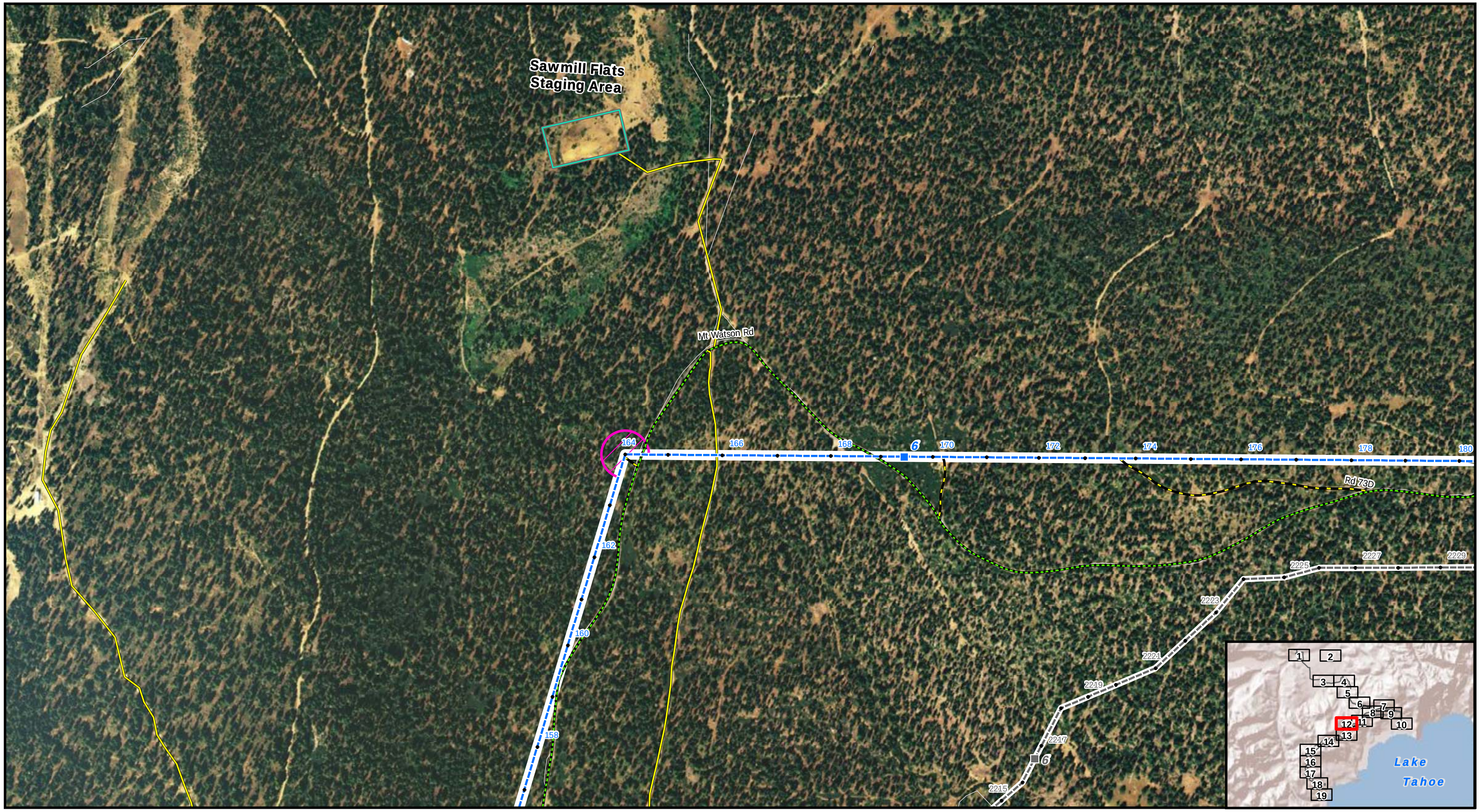

Attachment 3-A: Detailed Route Map 12 of 19

625 and 650 Line Upgrade Project

- New 625 Line
- Existing 625 Line
- 625/629 Double-Circuit
- 650 Line to be Rebuilt
- 650 Line Previously Upgraded
- 132/650 Double-Circuit to be Rebuilt
- 650 Line to be Removed
- Northstar Fold
- Existing Transmission Line Alignment
- Pole
- Self-Supporting Steel Pole
- Milepost (Color Coded by Line)
- Substation/Switching Station
- Staging Area
- Stringing Site
- Right-of-Way*
- Mount Watson Road (Fiberboard Highway)
- New Spur Road
- Dirt Road - No Improvement Needed
- Dirt Road - Improvement Needed
- Paved Road

*The right-of-way is 65 feet wide for all lines except the Existing 625 Line, which is 40 feet wide.

A centerline travel route will be used within the indicated rights-of-way.

Sierra Pacific™

INSIGNIA ENVIRONMENTAL

N W E S

1:7,000

0 250 500 1,000 1,500 2,000 Feet

Z:\GIS\Projects and Data\California\Projects\NLT\Mxds\PEA\FINAL\Att_3-A_Detailed_RouteMap.mxd

6/2/2010

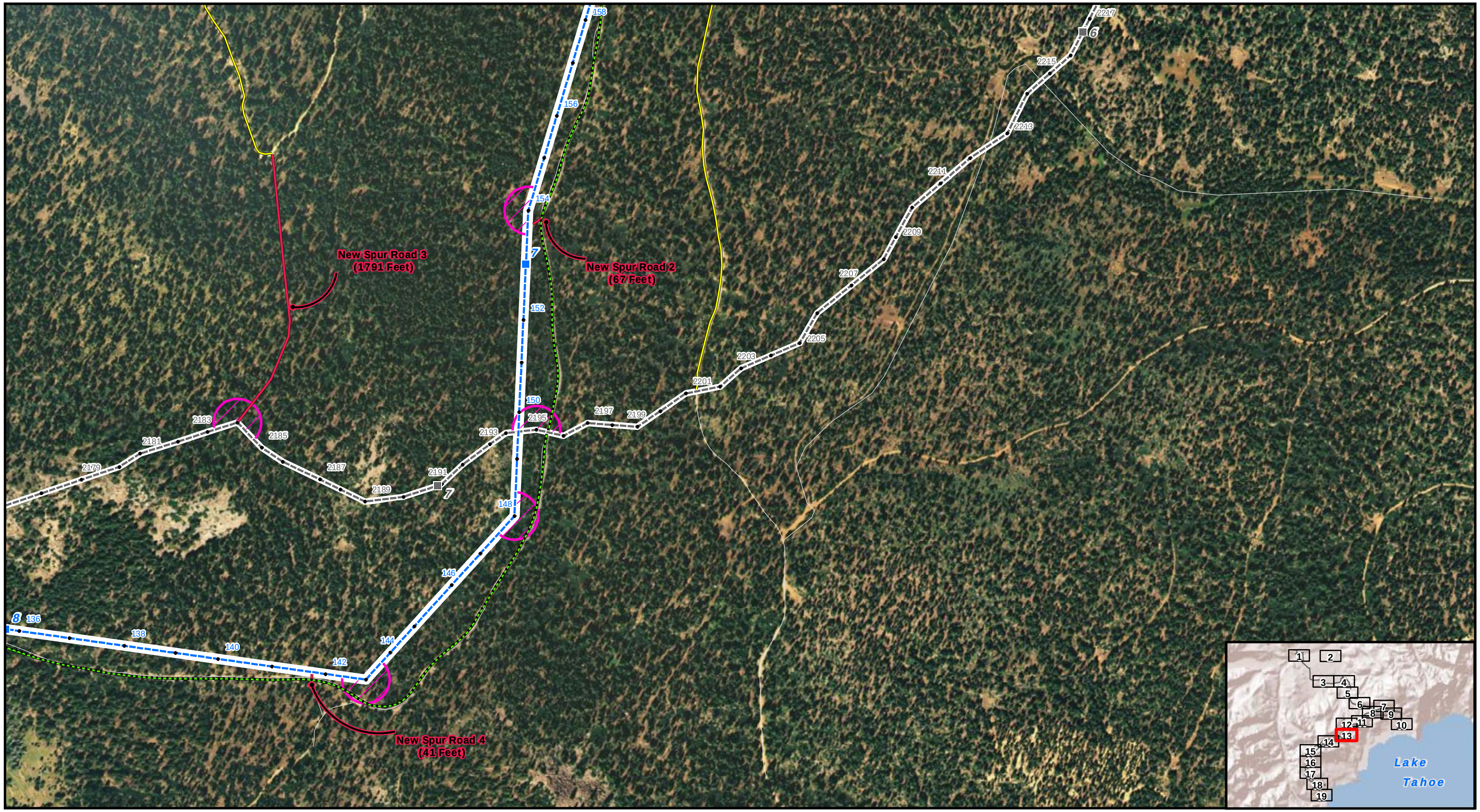

Attachment 3-A: Detailed Route Map 13 of 19

625 and 650 Line Upgrade Project

- New 625 Line
- Existing 625 Line
- 625/629 Double-Circuit
- 650 Line to be Rebuilt
- 650 Line Previously Upgraded
- 132/650 Double-Circuit to be Rebuilt
- 650 Line to be Removed
- Northstar Fold
- Existing Transmission Line Alignment
- Pole
- Self-Supporting Steel Pole
- Milepost (Color Coded by Line)
- Substation/Switching Station
- Staging Area
- Stringing Site
- Right-of-Way*
- Mount Watson Road (Fiberboard Highway)
- New Spur Road
- Dirt Road - No Improvement Needed
- Dirt Road - Improvement Needed
- Paved Road

*The right-of-way is 65 feet wide for all lines except the Existing 625 Line, which is 40 feet wide.

A centerline travel route will be used within the indicated rights-of-way.

Sierra Pacific™

INSIGNIA ENVIRONMENTAL

N W E S

1:7,000

0 250 500 1,000 1,500 2,000 Feet

Z:\GIS\Projects and Data\California\Projects\NLT\Mxds\PEA\FINAL\Att_3-A_Detailed_RouteMap.mxd

6/2/2010

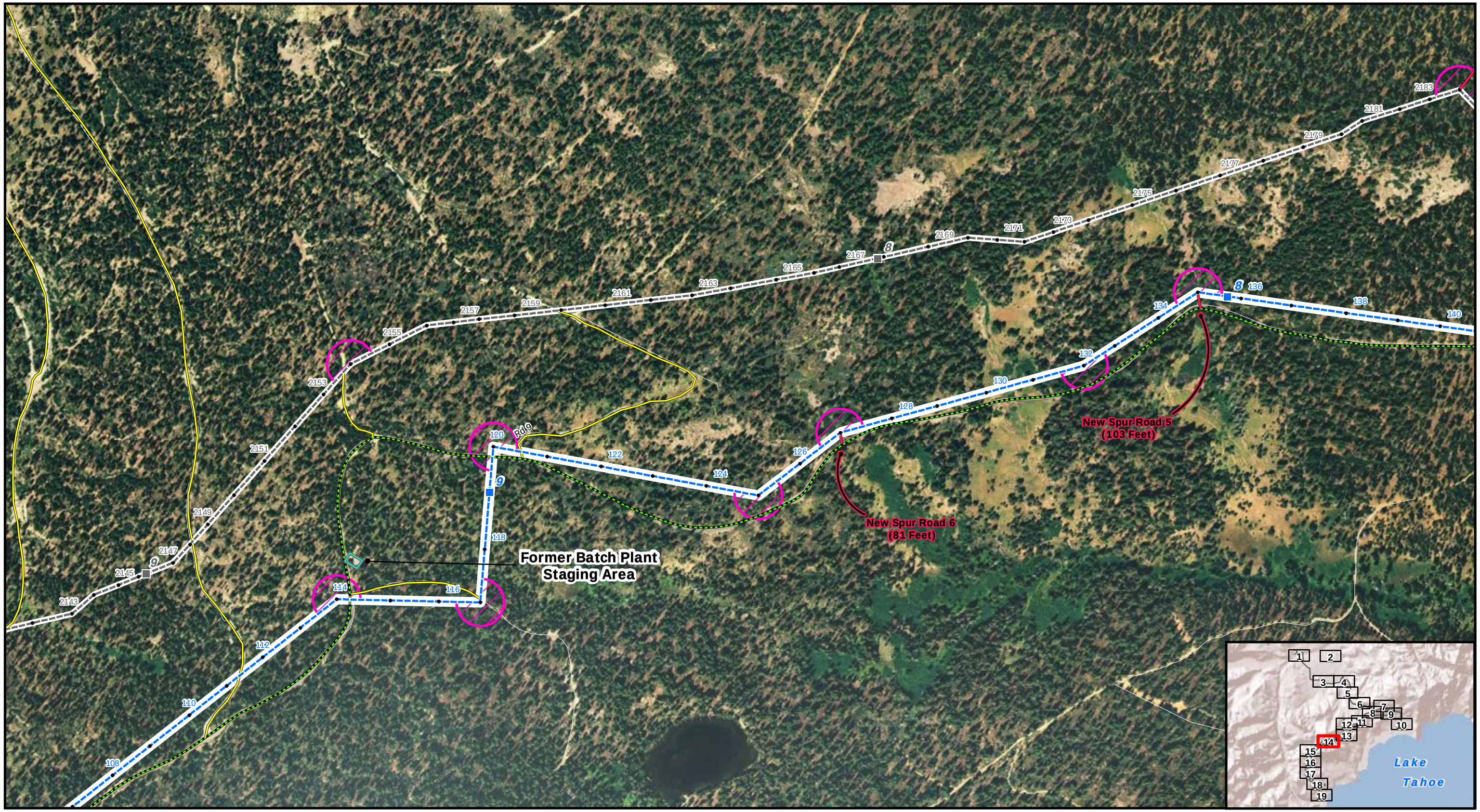

Attachment 3-A: Detailed Route Map 14 of 19

625 and 650 Line Upgrade Project

- New 625 Line
- Existing 625 Line
- 625/629 Double-Circuit
- 650 Line to be Rebuilt
- 650 Line Previously Upgraded
- 132/650 Double-Circuit to be Rebuilt
- 650 Line to be Removed
- Northstar Fold
- Existing Transmission Line Alignment
- Pole
- Self-Supporting Steel Pole
- Milepost (Color Coded by Line)
- Substation/Switching Station
- Staging Area
- Stringing Site
- Right-of-Way*
- Mount Watson Road (Fiberboard Highway)
- New Spur Road
- Dirt Road - No Improvement Needed
- Dirt Road - Improvement Needed
- Paved Road

*The right-of-way is 65 feet wide for all lines except the Existing 625 Line, which is 40 feet wide.

A centerline travel route will be used within the indicated rights-of-way.

Sierra Pacific

INSIGNIA ENVIRONMENTAL

N W E S

1:7,000

0 250 500 1,000 1,500 2,000 Feet

Z:\GIS\Projects and Data\California\Projects\NLT\Mxds\PEA\FINAL\Att_3-A_Detailed_RouteMap.mxd

6/2/2010

Attachment 3-A: Detailed Route Map 15 of 19

625 and 650 Line Upgrade Project

- New 625 Line
- Existing 625 Line
- 625/629 Double-Circuit
- 650 Line to be Rebuilt
- 650 Line Previously Upgraded
- 132/650 Double-Circuit to be Rebuilt
- 650 Line to be Removed
- Northstar Fold
- Existing Transmission Line Alignment
- Pole
- Self-Supporting Steel Pole
- Milepost (Color Coded by Line)
- Substation/Switching Station
- Staging Area
- Stringing Site
- Right-of-Way*
- Mount Watson Road (Fiberboard Highway)
- New Spur Road
- Dirt Road - No Improvement Needed
- Dirt Road - Improvement Needed
- Paved Road

*The right-of-way is 65 feet wide for all lines except the Existing 625 Line, which is 40 feet wide.

A centerline travel route will be used within the indicated rights-of-way.

Sierra Pacific™

INSIGNIA ENVIRONMENTAL

N W E S

1:7,000

0 250 500 1,000 1,500 2,000 Feet

Z:\GIS\Projects and Data\California\Projects\NLT\Mxds\PEA\FINAL\Att_3-A_Detailed_RouteMap.mxd

6/2/2010

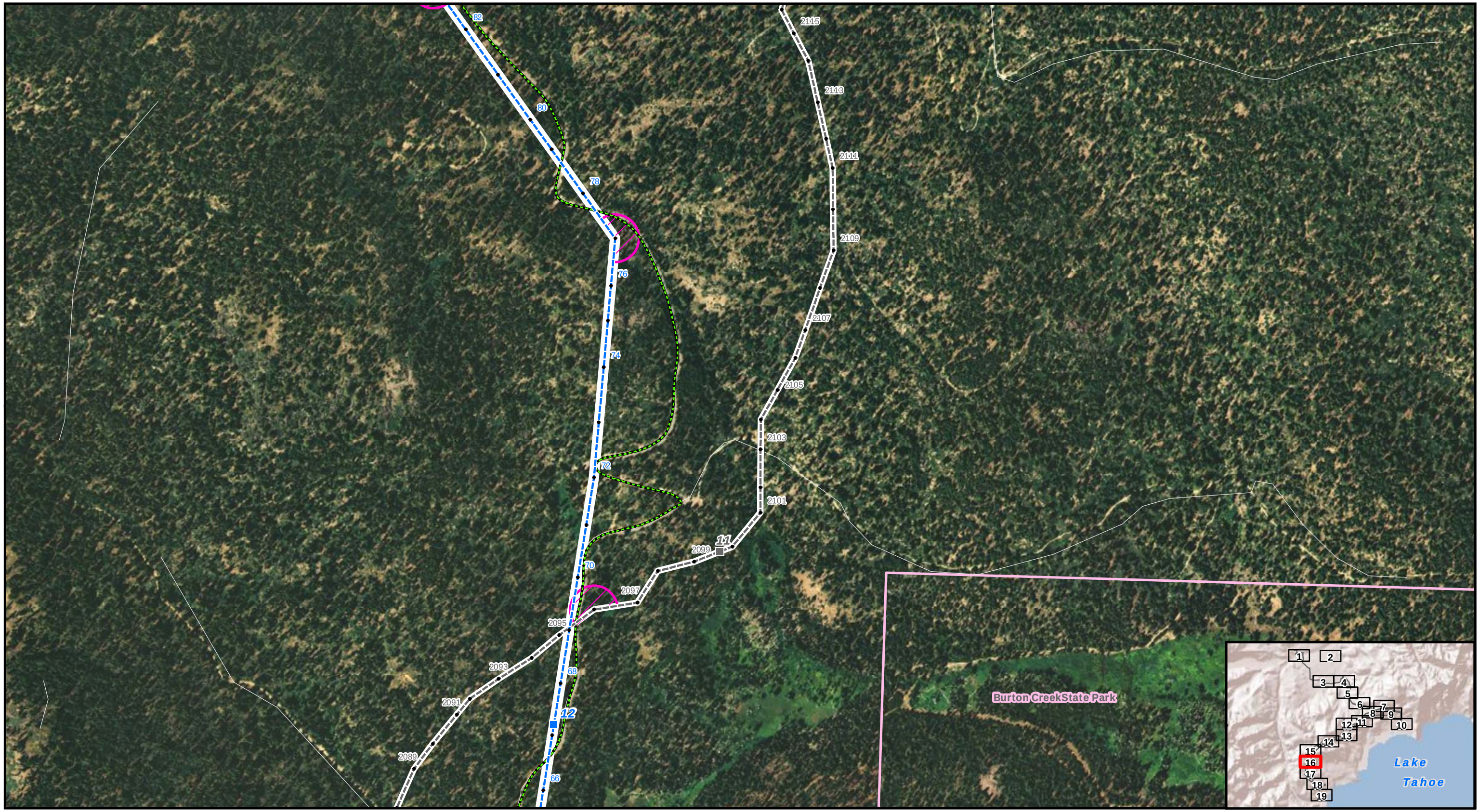

Attachment 3-A: Detailed Route Map 16 of 19

625 and 650 Line Upgrade Project

- New 625 Line
- Existing 625 Line
- 625/629 Double-Circuit
- 650 Line to be Rebuilt
- 650 Line Previously Upgraded
- 132/650 Double-Circuit to be Rebuilt
- 650 Line to be Removed
- Northstar Fold
- Existing Transmission Line Alignment
- Pole
- Self-Supporting Steel Pole
- Milepost (Color Coded by Line)
- Substation/Switching Station
- Staging Area
- Stringing Site
- Right-of-Way*
- Mount Watson Road (Fiberboard Highway)
- New Spur Road
- Dirt Road - No Improvement Needed
- Dirt Road - Improvement Needed
- Paved Road

*The right-of-way is 65 feet wide for all lines except the Existing 625 Line, which is 40 feet wide.

A centerline travel route will be used within the indicated rights-of-way.

Sierra Pacific™

INSIGNIA ENVIRONMENTAL

N W E S

1:7,000

0 250 500 1,000 1,500 2,000 Feet

Z:\GIS\Projects and Data\California\Projects\NLT\Mxds\PEA\FINAL\Att_3-A_Detailed_RouteMap.mxd

6/2/2010

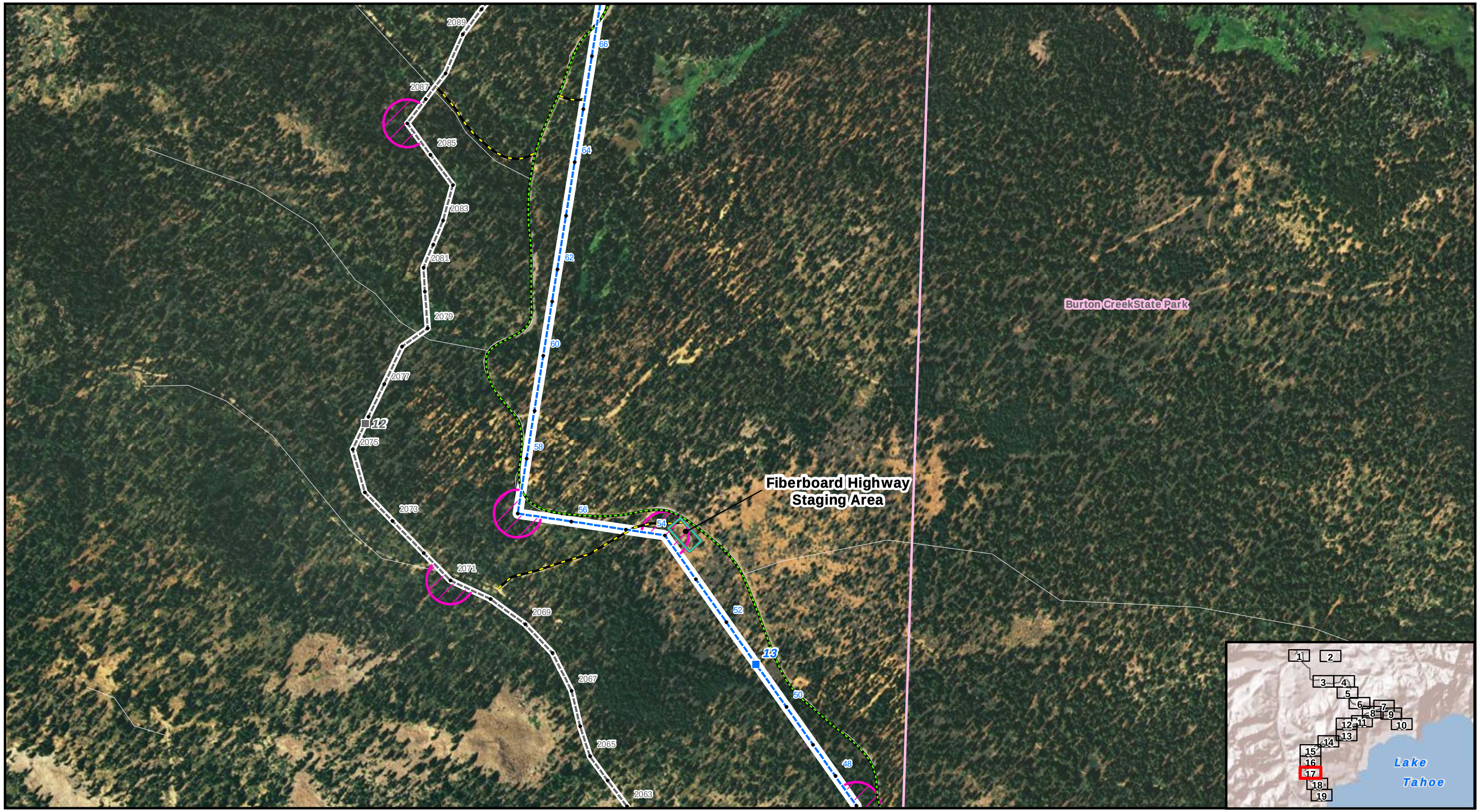

Attachment 3-A: Detailed Route Map 17 of 19

625 and 650 Line Upgrade Project

- New 625 Line
- Existing 625 Line
- 625/629 Double-Circuit
- 650 Line to be Rebuilt
- 650 Line Previously Upgraded
- 132/650 Double-Circuit to be Rebuilt
- 650 Line to be Removed
- Northstar Fold
- Existing Transmission Line Alignment
- Pole
- Self-Supporting Steel Pole
- Milepost (Color Coded by Line)
- Substation/Switching Station
- Staging Area
- Stringing Site
- Right-of-Way*
- Mount Watson Road (Fiberboard Highway)
- New Spur Road
- Dirt Road - No Improvement Needed
- Dirt Road - Improvement Needed
- Paved Road

*The right-of-way is 65 feet wide for all lines except the Existing 625 Line, which is 40 feet wide.

A centerline travel route will be used within the indicated rights-of-way.

Sierra Pacific

INSIGNIA ENVIRONMENTAL

N W E S

1:7,000

0 250 500 1,000 1,500 2,000 Feet

Z:\GIS\Projects and Data\California\Projects\NLT\Mxds\PEA\FINAL\Att_3-A_Detailed_RouteMap.mxd

6/2/2010

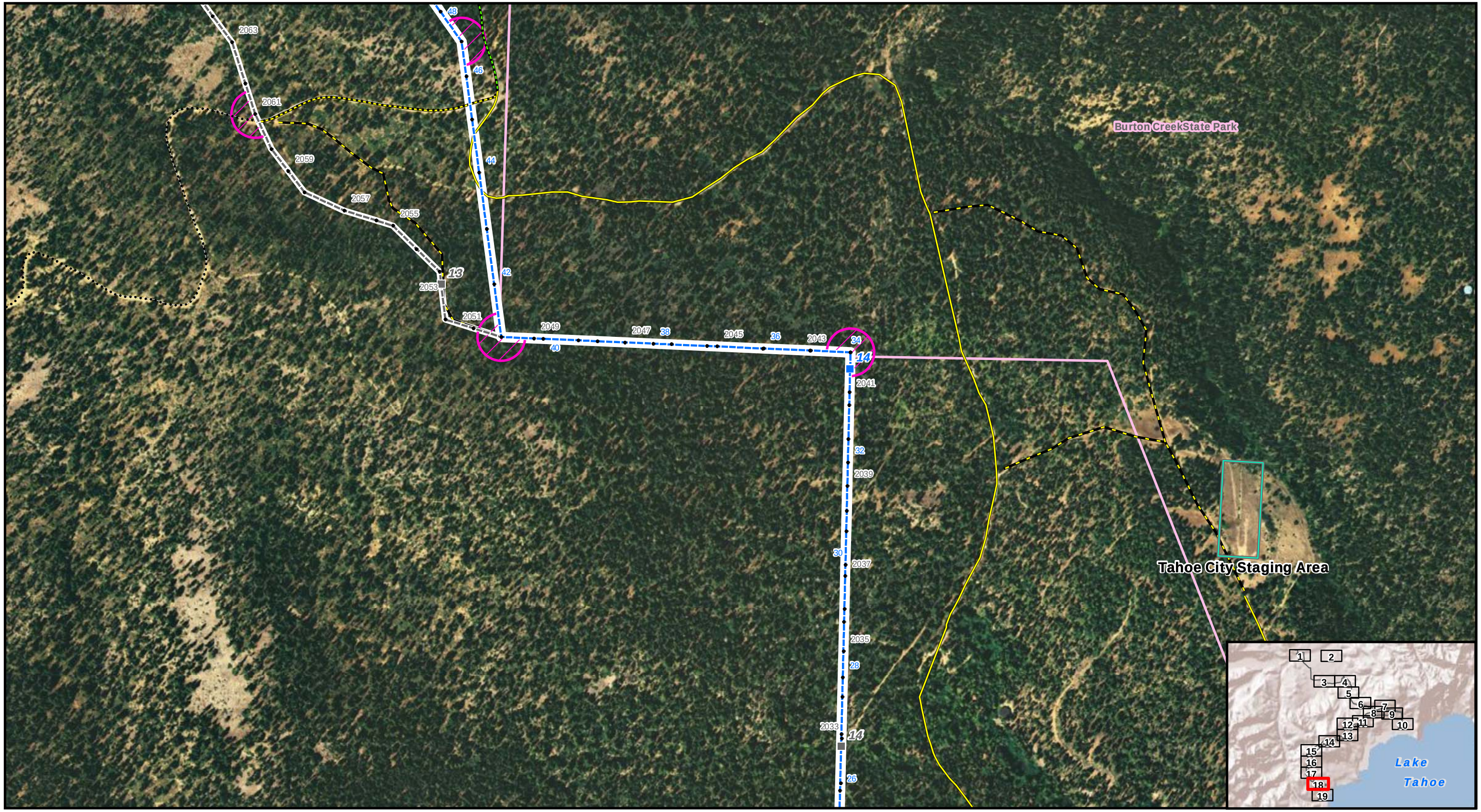

Attachment 3-A: Detailed Route Map 18 of 19

625 and 650 Line Upgrade Project

- New 625 Line
- Existing 625 Line
- 625/629 Double-Circuit
- 650 Line to be Rebuilt
- 650 Line Previously Upgraded
- 132/650 Double-Circuit to be Rebuilt
- 650 Line to be Removed
- Northstar Fold
- Existing Transmission Line Alignment
- Pole
- Self-Supporting Steel Pole
- Milepost (Color Coded by Line)
- Substation/Switching Station
- Staging Area
- Stringing Site
- Right-of-Way*
- Mount Watson Road (Fiberboard Highway)
- New Spur Road
- Dirt Road - No Improvement Needed
- Dirt Road - Improvement Needed
- Paved Road

*The right-of-way is 65 feet wide for all lines except the Existing 625 Line, which is 40 feet wide.

A centerline travel route will be used within the indicated rights-of-way.

Sierra Pacific™

INSIGNIA ENVIRONMENTAL

1:7,000

0 250 500 1,000 1,500 2,000 Feet

N W E S

Z:\GIS\Projects and Data\California\Projects\NLT\Mxds\PEA\FINAL\Att_3-A_Detailed_RouteMap.mxd

6/2/2010

Attachment 3-A: Detailed Route Map 19 of 19

625 and 650 Line Upgrade Project

- New 625 Line
- Existing 625 Line
- 625/629 Double-Circuit
- 650 Line to be Rebuilt
- 650 Line Previously Upgraded
- 132/650 Double-Circuit to be Rebuilt
- 650 Line to be Removed
- Northstar Fold
- Existing Transmission Line Alignment
- Pole
- Self-Supporting Steel Pole
- Milepost (Color Coded by Line)
- Substation/Switching Station
- Staging Area
- Stringing Site
- Right-of-Way*
- Mount Watson Road (Fiberboard Highway)
- New Spur Road
- Dirt Road - No Improvement Needed
- Dirt Road - Improvement Needed
- Paved Road

*The right-of-way is 65 feet wide for all lines except the Existing 625 Line, which is 40 feet wide.

A centerline travel route will be used within the indicated rights-of-way.

Sierra Pacific™

INSIGNIA ENVIRONMENTAL

1:7,000

0 250 500 1,000 1,500 2,000 Feet

N W E S

Z:\GIS\Projects and Data\California\Projects\NLT\Mxds\PEA\FINAL\Att_3-A_Detailed_RouteMap.mxd

6/2/2010

ATTACHMENT 3-B: TRANSMISSION POLE SUMMARY

Attachment 3-B: Transmission Pole Summary

Pole Number	Longitude (decimal degrees)	Latitude (decimal degrees)	Pole Height (feet)	Pole Type	Distribution Underbuild? (Yes/No)	Circuit Type	Jurisdiction
Existing 625 Line							
2000	-120.144691	39.166040	Unknown	Unknown	Yes	Double	Unclassified
2001	-120.145191	39.166206	Unknown	Unknown	Yes	Double	Unclassified
2002	-120.145792	39.166046	Unknown	Unknown	Yes	Double	Unclassified
2003	-120.146388	39.165887	Unknown	Unknown	Yes	Double	Unclassified
2004	-120.146941	39.165377	Unknown	Unknown	Yes	Double	Unclassified
2005	-120.147579	39.164796	Unknown	Unknown	Yes	Double	Unclassified
2006	-120.148138	39.164294	Unknown	Unknown	Yes	Double	Unclassified
2007	-120.148769	39.164341	Unknown	Unknown	Yes	Double	Unclassified
2008	-120.149666	39.164409	Unknown	Unknown	Yes	Double	Unclassified
2009	-120.150399	39.164786	Unknown	Unknown	Yes	Double	Unclassified
2010	-120.150721	39.165339	Unknown	Unknown	Yes	Double	Unclassified
2011	-120.151461	39.165331	Unknown	Unknown	Yes	Double	Unclassified
2012	-120.152192	39.165323	Unknown	Unknown	Yes	Double	Unclassified
2013	-120.152749	39.165334	Unknown	Unknown	Yes	Double	Unclassified
2014	-120.152755	39.165721	Unknown	Unknown	No	Single	Unclassified
2015	-120.152753	39.166487	Unknown	Unknown	No	Single	Unclassified
2016	-120.152758	39.166969	Unknown	Unknown	No	Single	Unclassified
2017	-120.152768	39.167754	Unknown	Unknown	No	Single	Unclassified
2018	-120.152777	39.168381	Unknown	Unknown	No	Single	Unclassified
2019	-120.152777	39.169087	Unknown	Unknown	No	Single	US Forest Service
2020	-120.152789	39.169705	Unknown	Unknown	No	Single	US Forest Service
2021	-120.153492	39.169918	Unknown	Unknown	No	Single	US Forest Service
2022	-120.153604	39.170356	Unknown	Unknown	No	Single	US Forest Service
2023	-120.153713	39.170753	Unknown	Unknown	No	Single	US Forest Service
2024	-120.153769	39.171525	Unknown	Unknown	No	Single	US Forest Service

Pole Number	Longitude (decimal degrees)	Latitude (decimal degrees)	Pole Height (feet)	Pole Type	Distribution Underbuild? (Yes/No)	Circuit Type	Jurisdiction
2025	-120.153371	39.171918	Unknown	Unknown	No	Single	US Forest Service
2026	-120.152825	39.172457	Unknown	Unknown	No	Single	US Forest Service
2027	-120.152844	39.173197	Unknown	Unknown	No	Single	US Forest Service
2028	-120.152854	39.174022	Unknown	Unknown	No	Single	US Forest Service
2029	-120.152865	39.174776	Unknown	Unknown	No	Single	US Forest Service
2030	-120.152872	39.175228	Unknown	Unknown	No	Single	US Forest Service
2031	-120.152886	39.175706	Unknown	Unknown	No	Single	US Forest Service
2032	-120.152888	39.176257	Unknown	Unknown	No	Single	US Forest Service
2033	-120.152903	39.177031	Unknown	Unknown	No	Single	US Forest Service
2034	-120.152916	39.177749	Unknown	Unknown	No	Single	US Forest Service
2035	-120.152928	39.178542	Unknown	Unknown	No	Single	US Forest Service
2036	-120.152939	39.179269	Unknown	Unknown	No	Single	US Forest Service
2037	-120.152951	39.179843	Unknown	Unknown	No	Single	US Forest Service
2038	-120.152960	39.180619	Unknown	Unknown	No	Single	US Forest Service
2039	-120.152971	39.181398	Unknown	Unknown	No	Single	US Forest Service
2040	-120.152988	39.182213	Unknown	Unknown	No	Single	US Forest Service
2041	-120.152997	39.183021	Unknown	Unknown	No	Single	US Forest Service
2042	-120.153006	39.183713	Unknown	Unknown	No	Single	State
2043	-120.153906	39.183719	Unknown	Unknown	No	Single	State
2044	-120.154955	39.183725	Unknown	Unknown	No	Single	State
2045	-120.155972	39.183739	Unknown	Unknown	No	Single	State
2046	-120.156987	39.183745	Unknown	Unknown	No	Single	State
2047	-120.158021	39.183748	Unknown	Unknown	No	Single	US Forest Service
2048	-120.159059	39.183758	Unknown	Unknown	No	Single	US Forest Service
2049	-120.160051	39.183762	Unknown	Unknown	No	Single	US Forest Service
2050	-120.160777	39.183768	Unknown	Unknown	No	Single	US Forest Service
2051	-120.161401	39.183901	Unknown	Unknown	No	Single	US Forest Service
2052	-120.162032	39.184037	Unknown	Unknown	No	Single	US Forest Service
2053	-120.162195	39.184859	Unknown	Unknown	No	Single	US Forest Service
2054	-120.162727	39.185239	Unknown	Unknown	No	Single	US Forest Service

Pole Number	Longitude (decimal degrees)	Latitude (decimal degrees)	Pole Height (feet)	Pole Type	Distribution Underbuild? (Yes/No)	Circuit Type	Jurisdiction
2055	-120.163268	39.185625	Unknown	Unknown	No	Single	US Forest Service
2056	-120.163644	39.185708	Unknown	Unknown	No	Single	US Forest Service
2057	-120.164363	39.185858	Unknown	Unknown	No	Single	US Forest Service
2058	-120.165258	39.186151	Unknown	Unknown	No	Single	US Forest Service
2059	-120.165637	39.186509	Unknown	Unknown	No	Single	US Forest Service
2060	-120.166028	39.186879	Unknown	Unknown	No	Single	US Forest Service
2061	-120.166414	39.187473	Unknown	Unknown	No	Single	US Forest Service
2062	-120.166659	39.187998	Unknown	Unknown	No	Single	US Forest Service
2063	-120.166986	39.188702	Unknown	Unknown	No	Single	US Forest Service
2064	-120.167436	39.189140	Unknown	Unknown	No	Single	US Forest Service
2065	-120.167849	39.189548	Unknown	Unknown	No	Single	US Forest Service
2066	-120.168093	39.190065	Unknown	Unknown	No	Single	US Forest Service
2067	-120.168308	39.190671	Unknown	Unknown	No	Single	US Forest Service
2068	-120.168764	39.191313	Unknown	Unknown	No	Single	US Forest Service
2069	-120.169390	39.191791	Unknown	Unknown	No	Single	US Forest Service
2070	-120.170185	39.192209	Unknown	Unknown	No	Single	US Forest Service
2071	-120.171090	39.192506	Unknown	Unknown	No	Single	US Forest Service
2072	-120.171705	39.192965	Unknown	Unknown	No	Single	US Forest Service
2073	-120.172419	39.193500	Unknown	Unknown	No	Single	US Forest Service
2074	-120.173061	39.193980	Unknown	Unknown	No	Single	US Forest Service
2075	-120.173363	39.194715	Unknown	Unknown	No	Single	US Forest Service
2076	-120.173039	39.195287	Unknown	Unknown	No	Single	US Forest Service
2077	-120.172711	39.195864	Unknown	Unknown	No	Single	US Forest Service
2078	-120.172343	39.196526	Unknown	Unknown	No	Single	US Forest Service
2079	-120.171788	39.196852	Unknown	Unknown	No	Single	US Forest Service
2080	-120.171878	39.197488	Unknown	Unknown	No	Single	US Forest Service
2081	-120.171930	39.197900	Unknown	Unknown	No	Single	US Forest Service
2082	-120.171736	39.198300	Unknown	Unknown	No	Single	US Forest Service
2083	-120.171529	39.198729	Unknown	Unknown	No	Single	US Forest Service
2084	-120.171341	39.199348	Unknown	Unknown	No	Single	US Forest Service

Pole Number	Longitude (decimal degrees)	Latitude (decimal degrees)	Pole Height (feet)	Pole Type	Distribution Underbuild? (Yes/No)	Circuit Type	Jurisdiction
2085	-120.171866	39.199859	Unknown	Unknown	No	Single	US Forest Service
2086	-120.172404	39.200388	Unknown	Unknown	No	Single	US Forest Service
2087	-120.172009	39.200820	Unknown	Unknown	No	Single	US Forest Service
2088	-120.171595	39.201274	Unknown	Unknown	No	Single	US Forest Service
2089	-120.171237	39.201962	Unknown	Unknown	No	Single	US Forest Service
2090	-120.170843	39.202405	Unknown	Unknown	No	Single	US Forest Service
2091	-120.170326	39.202927	Unknown	Unknown	No	Single	US Forest Service
2092	-120.170051	39.203208	Unknown	Unknown	No	Single	US Forest Service
2093	-120.169428	39.203568	Unknown	Unknown	No	Single	US Forest Service
2094	-120.168709	39.203949	Unknown	Unknown	No	Single	US Forest Service
2095	-120.168116	39.204362	Unknown	Unknown	No	Single	US Forest Service
2096	-120.167359	39.204824	Unknown	Unknown	No	Single	US Forest Service
2097	-120.166402	39.204970	Unknown	Unknown	No	Single	US Forest Service
2098	-120.165974	39.205530	Unknown	Unknown	No	Single	US Forest Service
2099	-120.165169	39.205714	Unknown	Unknown	No	Single	US Forest Service
2100	-120.164332	39.205998	Unknown	Unknown	No	Single	US Forest Service
2101	-120.163737	39.206601	Unknown	Unknown	No	Single	US Forest Service
2102	-120.163756	39.207037	Unknown	Unknown	No	Single	US Forest Service
2103	-120.163781	39.207698	Unknown	Unknown	No	Single	US Forest Service
2104	-120.163799	39.208210	Unknown	Unknown	No	Single	US Forest Service
2105	-120.163452	39.208734	Unknown	Unknown	No	Single	US Forest Service
2106	-120.163082	39.209299	Unknown	Unknown	No	Single	US Forest Service
2107	-120.162880	39.209784	Unknown	Unknown	No	Single	US Forest Service
2108	-120.162583	39.210525	Unknown	Unknown	No	Single	US Forest Service
2109	-120.162313	39.211182	Unknown	Unknown	No	Single	US Forest Service
2110	-120.162356	39.211894	Unknown	Unknown	No	Single	US Forest Service
2111	-120.162395	39.212606	Unknown	Unknown	No	Single	US Forest Service
2112	-120.162568	39.213112	Unknown	Unknown	No	Single	US Forest Service
2113	-120.162780	39.213736	Unknown	Unknown	No	Single	US Forest Service
2114	-120.163023	39.214450	Unknown	Unknown	No	Single	US Forest Service

Pole Number	Longitude (decimal degrees)	Latitude (decimal degrees)	Pole Height (feet)	Pole Type	Distribution Underbuild? (Yes/No)	Circuit Type	Jurisdiction
2115	-120.163365	39.214915	Unknown	Unknown	No	Single	US Forest Service
2116	-120.163655	39.215315	Unknown	Unknown	No	Single	US Forest Service
2117	-120.163503	39.215866	Unknown	Unknown	No	Single	US Forest Service
2118	-120.163454	39.216575	Unknown	Unknown	No	Single	US Forest Service
2119	-120.163422	39.217130	Unknown	Unknown	No	Single	US Forest Service
2120	-120.163553	39.217502	Unknown	Unknown	No	Single	US Forest Service
2121	-120.163794	39.218227	Unknown	Unknown	No	Single	US Forest Service
2122	-120.164033	39.218936	Unknown	Unknown	No	Single	US Forest Service
2123	-120.164232	39.219525	Unknown	Unknown	No	Single	US Forest Service
2124	-120.163933	39.220194	Unknown	Unknown	No	Single	US Forest Service
2125	-120.163616	39.220901	Unknown	Unknown	No	Single	US Forest Service
2126	-120.163027	39.221196	Unknown	Unknown	No	Single	US Forest Service
2127	-120.162206	39.221614	Unknown	Unknown	No	Single	US Forest Service
2128	-120.161366	39.222043	Unknown	Unknown	No	Single	US Forest Service
2129	-120.160654	39.222402	Unknown	Unknown	No	Single	US Forest Service
2130	-120.159844	39.222807	Unknown	Unknown	No	Single	US Forest Service
2131	-120.159642	39.223248	Unknown	Unknown	No	Single	US Forest Service
2132	-120.159453	39.223659	Unknown	Unknown	No	Single	US Forest Service
2133	-120.159124	39.224352	Unknown	Unknown	No	Single	US Forest Service
2134	-120.158609	39.224750	Unknown	Unknown	No	Single	US Forest Service
2135	-120.158025	39.225213	Unknown	Unknown	No	Single	US Forest Service
2136	-120.157334	39.225503	Unknown	Unknown	No	Single	US Forest Service
2137	-120.156641	39.225794	Unknown	Unknown	No	Single	US Forest Service
2138	-120.155849	39.226123	Unknown	Unknown	No	Single	US Forest Service
2139	-120.155118	39.226230	Unknown	Unknown	No	Single	US Forest Service
2140	-120.154182	39.226365	Unknown	Unknown	No	Single	US Forest Service
2141	-120.153458	39.226574	Unknown	Unknown	No	Single	US Forest Service
2142	-120.152583	39.226762	Unknown	Unknown	No	Single	US Forest Service
2143	-120.151707	39.226947	Unknown	Unknown	No	Single	US Forest Service
2144	-120.151239	39.227285	Unknown	Unknown	No	Single	US Forest Service

Pole Number	Longitude (decimal degrees)	Latitude (decimal degrees)	Pole Height (feet)	Pole Type	Distribution Underbuild? (Yes/No)	Circuit Type	Jurisdiction
2145	-120.150697	39.227472	Unknown	Unknown	No	Single	US Forest Service
2146	-120.150261	39.227624	Unknown	Unknown	No	Single	US Forest Service
2147	-120.149500	39.227890	Unknown	Unknown	No	Single	Unclassified
2148	-120.149141	39.228215	Unknown	Unknown	No	Single	Unclassified
2149	-120.148753	39.228576	Unknown	Unknown	No	Single	Unclassified
2150	-120.148198	39.229095	Unknown	Unknown	No	Single	Unclassified
2151	-120.147544	39.229708	Unknown	Unknown	No	Single	Unclassified
2152	-120.146888	39.230325	Unknown	Unknown	No	Single	Unclassified
2153	-120.146285	39.230888	Unknown	Unknown	No	Single	Unclassified
2154	-120.145703	39.231436	Unknown	Unknown	No	Single	Unclassified
2155	-120.144858	39.231797	Unknown	Unknown	No	Single	Unclassified
2156	-120.144042	39.232148	Unknown	Unknown	No	Single	Unclassified
2157	-120.143450	39.232218	Unknown	Unknown	No	Single	Unclassified
2158	-120.142881	39.232287	Unknown	Unknown	No	Single	Unclassified
2159	-120.142097	39.232374	Unknown	Unknown	No	Single	US Forest Service
2160	-120.141061	39.232492	Unknown	Unknown	No	Single	US Forest Service
2161	-120.140084	39.232606	Unknown	Unknown	No	Single	US Forest Service
2162	-120.139079	39.232723	Unknown	Unknown	No	Single	US Forest Service
2163	-120.138163	39.232828	Unknown	Unknown	No	Single	US Forest Service
2164	-120.137312	39.232974	Unknown	Unknown	No	Single	US Forest Service
2165	-120.136298	39.233149	Unknown	Unknown	No	Single	US Forest Service
2166	-120.135466	39.233289	Unknown	Unknown	No	Single	US Forest Service
2167	-120.134907	39.233408	Unknown	Unknown	No	Single	US Forest Service
2168	-120.133925	39.233608	Unknown	Unknown	No	Single	US Forest Service
2169	-120.132946	39.233810	Unknown	Unknown	No	Single	US Forest Service
2170	-120.132070	39.233992	Unknown	Unknown	No	Single	US Forest Service
2171	-120.131419	39.233973	Unknown	Unknown	No	Single	US Forest Service
2172	-120.130810	39.233955	Unknown	Unknown	No	Single	US Forest Service
2173	-120.130176	39.234139	Unknown	Unknown	No	Single	US Forest Service
2174	-120.129402	39.234369	Unknown	Unknown	No	Single	US Forest Service

Pole Number	Longitude (decimal degrees)	Latitude (decimal degrees)	Pole Height (feet)	Pole Type	Distribution Underbuild? (Yes/No)	Circuit Type	Jurisdiction
2175	-120.128439	39.234652	Unknown	Unknown	No	Single	US Forest Service
2176	-120.127479	39.234933	Unknown	Unknown	No	Single	US Forest Service
2177	-120.126507	39.235218	Unknown	Unknown	No	Single	US Forest Service
2178	-120.125556	39.235500	Unknown	Unknown	No	Single	US Forest Service
2179	-120.124676	39.235759	Unknown	Unknown	No	Single	US Forest Service
2180	-120.123840	39.236005	Unknown	Unknown	No	Single	US Forest Service
2181	-120.123388	39.236247	Unknown	Unknown	No	Single	US Forest Service
2182	-120.122558	39.236475	Unknown	Unknown	No	Single	US Forest Service
2183	-120.121904	39.236662	Unknown	Unknown	No	Single	US Forest Service
2184	-120.121246	39.236842	Unknown	Unknown	No	Single	US Forest Service
2185	-120.120690	39.236423	Unknown	Unknown	No	Single	US Forest Service
2186	-120.120207	39.236190	Unknown	Unknown	No	Single	US Forest Service
2187	-120.119369	39.235906	Unknown	Unknown	No	Single	US Forest Service
2188	-120.118904	39.235746	Unknown	Unknown	No	Single	US Forest Service
2189	-120.118346	39.235551	Unknown	Unknown	No	Single	US Forest Service
2190	-120.117494	39.235656	Unknown	Unknown	No	Single	US Forest Service
2191	-120.116653	39.235896	Unknown	Unknown	No	Single	US Forest Service
2192	-120.116204	39.236248	Unknown	Unknown	No	Single	US Forest Service
2193	-120.115616	39.236617	Unknown	Unknown	No	Single	US Forest Service
2194	-120.115265	39.236821	Unknown	Unknown	No	Single	US Forest Service
2195	-120.114590	39.236896	Unknown	Unknown	No	Single	US Forest Service
2196	-120.113981	39.236808	Unknown	Unknown	No	Single	US Forest Service
2197	-120.113455	39.237042	Unknown	Unknown	No	Single	US Forest Service
2198	-120.112909	39.237023	Unknown	Unknown	No	Single	US Forest Service
2199	-120.112343	39.237007	Unknown	Unknown	No	Single	US Forest Service
2200	-120.111848	39.237292	Unknown	Unknown	No	Single	US Forest Service
2201	-120.111296	39.237612	Unknown	Unknown	No	Single	US Forest Service
2202	-120.110537	39.237750	Unknown	Unknown	No	Single	US Forest Service
2203	-120.110086	39.238080	Unknown	Unknown	No	Single	US Forest Service
2204	-120.109432	39.238321	Unknown	Unknown	No	Single	US Forest Service

Pole Number	Longitude (decimal degrees)	Latitude (decimal degrees)	Pole Height (feet)	Pole Type	Distribution Underbuild? (Yes/No)	Circuit Type	Jurisdiction
2205	-120.108799	39.238551	Unknown	Unknown	No	Single	US Forest Service
2206	-120.108436	39.239080	Unknown	Unknown	No	Single	US Forest Service
2207	-120.107696	39.239581	Unknown	Unknown	No	Single	US Forest Service
2208	-120.106995	39.240054	Unknown	Unknown	No	Single	US Forest Service
2209	-120.106745	39.240441	Unknown	Unknown	No	Single	US Forest Service
2210	-120.106402	39.240962	Unknown	Unknown	No	Single	US Forest Service
2211	-120.105788	39.241396	Unknown	Unknown	No	Single	US Forest Service
2212	-120.105148	39.241854	Unknown	Unknown	No	Single	US Forest Service
2213	-120.104339	39.242304	Unknown	Unknown	No	Single	US Forest Service
2214	-120.103931	39.243001	Unknown	Unknown	No	Single	US Forest Service
2215	-120.103439	39.243364	Unknown	Unknown	No	Single	US Forest Service
2216	-120.102992	39.243688	Unknown	Unknown	No	Single	US Forest Service
2217	-120.102597	39.244334	Unknown	Unknown	No	Single	US Forest Service
2218	-120.102189	39.244998	Unknown	Unknown	No	Single	US Forest Service
2219	-120.101596	39.245212	Unknown	Unknown	No	Single	US Forest Service
2220	-120.100986	39.245433	Unknown	Unknown	No	Single	US Forest Service
2221	-120.100116	39.245748	Unknown	Unknown	No	Single	US Forest Service
2222	-120.099472	39.246241	Unknown	Unknown	No	Single	US Forest Service
2223	-120.098812	39.246745	Unknown	Unknown	No	Single	US Forest Service
2224	-120.098223	39.247338	Unknown	Unknown	No	Single	US Forest Service
2225	-120.097322	39.247395	Unknown	Unknown	No	Single	US Forest Service
2226	-120.096553	39.247579	Unknown	Unknown	No	Single	US Forest Service
2227	-120.095748	39.247602	Unknown	Unknown	No	Single	US Forest Service
2228	-120.094793	39.247629	Unknown	Unknown	No	Single	US Forest Service
2229	-120.093854	39.247659	Unknown	Unknown	No	Single	US Forest Service
2230	-120.093036	39.247682	Unknown	Unknown	No	Single	US Forest Service
2231	-120.092433	39.248303	Unknown	Unknown	No	Single	US Forest Service
2232	-120.091867	39.248888	Unknown	Unknown	No	Single	US Forest Service
2233	-120.091290	39.249090	Unknown	Unknown	No	Single	US Forest Service
2234	-120.090980	39.249487	Unknown	Unknown	No	Single	US Forest Service

Pole Number	Longitude (decimal degrees)	Latitude (decimal degrees)	Pole Height (feet)	Pole Type	Distribution Underbuild? (Yes/No)	Circuit Type	Jurisdiction
2235	-120.090500	39.250103	Unknown	Unknown	No	Single	US Forest Service
2236	-120.090038	39.250692	Unknown	Unknown	No	Single	Unclassified
2237	-120.089775	39.251345	Unknown	Unknown	No	Single	Unclassified
2238	-120.089506	39.252019	Unknown	Unknown	No	Single	Unclassified
2239	-120.089133	39.252414	Unknown	Unknown	No	Single	Unclassified
2240	-120.088570	39.253004	Unknown	Unknown	No	Single	Unclassified
2241	-120.088004	39.253609	Unknown	Unknown	No	Single	US Forest Service
2242	-120.087751	39.253949	Unknown	Unknown	No	Single	Unclassified
2243	-120.087427	39.254384	Unknown	Unknown	No	Single	Unclassified
2244	-120.087142	39.254791	Unknown	Unknown	No	Single	Unclassified
2245	-120.086566	39.255299	Unknown	Unknown	No	Single	Unclassified
2246	-120.085880	39.255903	Unknown	Unknown	No	Single	US Forest Service
2247	-120.085620	39.256501	Unknown	Unknown	No	Single	US Forest Service
2248	-120.085354	39.257121	Unknown	Unknown	No	Single	US Forest Service
2249	-120.085027	39.257869	Unknown	Unknown	No	Single	US Forest Service
2250	-120.084510	39.258358	Unknown	Unknown	No	Single	US Forest Service
2251	-120.083895	39.258940	Unknown	Unknown	No	Single	US Forest Service
2252	-120.083397	39.259413	Unknown	Unknown	No	Single	Unclassified
2253	-120.082771	39.260011	Unknown	Unknown	No	Single	Unclassified
2254	-120.081829	39.260243	Unknown	Unknown	No	Single	Unclassified
2255	-120.081269	39.260872	Unknown	Unknown	No	Single	Unclassified
2256	-120.080715	39.261138	Unknown	Unknown	No	Single	Unclassified
2257	-120.080249	39.261358	Unknown	Unknown	No	Single	Unclassified
2258	-120.079528	39.261422	Unknown	Unknown	No	Single	Unclassified
2259	-120.078551	39.261507	Unknown	Unknown	No	Single	Unclassified
2260	-120.077876	39.261564	Unknown	Unknown	No	Single	Unclassified
2261	-120.077054	39.261789	Unknown	Unknown	No	Single	Unclassified
2262	-120.076385	39.261967	Unknown	Unknown	No	Single	Unclassified
2263	-120.075707	39.262431	Unknown	Unknown	No	Single	Unclassified
2264	-120.075010	39.262908	Unknown	Unknown	No	Single	Unclassified

Pole Number	Longitude (decimal degrees)	Latitude (decimal degrees)	Pole Height (feet)	Pole Type	Distribution Underbuild? (Yes/No)	Circuit Type	Jurisdiction
2265	-120.074210	39.263138	Unknown	Unknown	No	Single	Unclassified
2266	-120.073636	39.263295	Unknown	Unknown	No	Single	Unclassified
2267	-120.072957	39.263068	Unknown	Unknown	No	Single	Unclassified
2268	-120.072436	39.262894	Unknown	Unknown	No	Single	Unclassified
2269	-120.071517	39.262828	Unknown	Unknown	Yes	Single	Unclassified
2270	-120.071035	39.263271	Unknown	Unknown	Yes	Single	Unclassified
2271	-120.070452	39.263807	Unknown	Unknown	Yes	Single	Unclassified
2272	-120.069696	39.263843	Unknown	Unknown	Yes	Single	Unclassified
2273	-120.068854	39.263882	Unknown	Unknown	Yes	Single	Unclassified
2274	-120.068403	39.263852	Unknown	Unknown	Yes	Single	Unclassified
2275	-120.067497	39.263889	Unknown	Unknown	Yes	Single	US Forest Service
2276	-120.066790	39.263963	Unknown	Unknown	No	Single	US Forest Service
2277	-120.066328	39.264131	Unknown	Unknown	No	Single	US Forest Service
2278	-120.065400	39.264476	Unknown	Unknown	No	Single	US Forest Service
2279	-120.064492	39.264813	Unknown	Unknown	No	Single	US Forest Service
2280	-120.063699	39.265108	Unknown	Unknown	No	Single	Unclassified
2281	-120.062882	39.265213	Unknown	Unknown	No	Single	Unclassified
2282	-120.061923	39.265451	Unknown	Unknown	No	Single	Unclassified
2283	-120.060916	39.265698	Unknown	Unknown	No	Single	Unclassified
2284	-120.059908	39.265946	Unknown	Unknown	No	Single	Unclassified
2285	-120.058966	39.266178	Unknown	Unknown	No	Single	Unclassified
2286	-120.058066	39.266398	Unknown	Unknown	No	Single	US Forest Service
2287	-120.057249	39.266597	Unknown	Unknown	No	Single	US Forest Service
2288	-120.056699	39.266257	Unknown	Unknown	No	Single	US Forest Service
2289	-120.056047	39.265853	Unknown	Unknown	No	Single	US Forest Service
2290	-120.055342	39.265806	Unknown	Unknown	No	Single	US Forest Service
2291	-120.054457	39.265619	Unknown	Unknown	No	Single	US Forest Service
2292	-120.053492	39.265412	Unknown	Unknown	No	Single	US Forest Service
2293	-120.052752	39.265261	Unknown	Unknown	No	Single	US Forest Service
2294	-120.051582	39.265008	Unknown	Unknown	No	Single	US Forest Service

Pole Number	Longitude (decimal degrees)	Latitude (decimal degrees)	Pole Height (feet)	Pole Type	Distribution Underbuild? (Yes/No)	Circuit Type	Jurisdiction
2295	-120.050659	39.264814	Unknown	Unknown	No	Single	US Forest Service
2296	-120.049666	39.264605	Unknown	Unknown	No	Single	US Forest Service
2297	-120.048813	39.264249	Unknown	Unknown	No	Single	US Forest Service
2298	-120.047964	39.263894	Unknown	Unknown	No	Single	US Forest Service
2299	-120.047006	39.263901	Unknown	Unknown	No	Single	US Forest Service
2300	-120.046335	39.264126	Unknown	Unknown	No	Single	US Forest Service
2301	-120.045717	39.264484	Unknown	Unknown	No	Single	US Forest Service
2302	-120.044830	39.264476	Unknown	Unknown	No	Single	US Forest Service
2303	-120.043944	39.264468	Unknown	Unknown	No	Single	US Forest Service
2304	-120.043185	39.264166	Unknown	Unknown	No	Single	US Forest Service
2305	-120.042515	39.263899	Unknown	Unknown	No	Single	US Forest Service
2306	-120.041830	39.263623	Unknown	Unknown	No	Single	US Forest Service
2307	-120.041165	39.263207	Unknown	Unknown	No	Single	US Forest Service
2308	-120.040678	39.262902	Unknown	Unknown	No	Single	US Forest Service
2309	-120.040031	39.262499	Unknown	Unknown	No	Single	US Forest Service
2310	-120.039096	39.262243	Unknown	Unknown	No	Single	US Forest Service
2311	-120.038450	39.262052	Unknown	Unknown	No	Single	US Forest Service
2312	-120.037957	39.262186	Unknown	Unknown	No	Single	US Forest Service
2313	-120.037427	39.262323	Unknown	Unknown	No	Single	US Forest Service
2314	-120.036600	39.262020	Unknown	Unknown	No	Single	US Forest Service
2315	-120.035964	39.261785	Unknown	Unknown	No	Single	US Forest Service
2316	-120.035415	39.261585	Unknown	Unknown	No	Single	US Forest Service
2317	-120.034735	39.261739	Unknown	Unknown	No	Single	US Forest Service
2318	-120.033950	39.261920	Unknown	Unknown	No	Single	US Forest Service
2319	-120.033159	39.261500	Unknown	Unknown	No	Single	US Forest Service
2320	-120.032330	39.261440	Unknown	Unknown	No	Single	US Forest Service
2321	-120.031474	39.261380	Unknown	Unknown	No	Single	US Forest Service
2322	-120.030785	39.261331	Unknown	Unknown	No	Single	US Forest Service
2323	-120.030179	39.261435	Unknown	Unknown	No	Single	US Forest Service
2324	-120.029840	39.261495	Unknown	Unknown	No	Single	US Forest Service

Pole Number	Longitude (decimal degrees)	Latitude (decimal degrees)	Pole Height (feet)	Pole Type	Distribution Underbuild? (Yes/No)	Circuit Type	Jurisdiction
2325	-120.029843	39.260771	Unknown	Unknown	No	Single	US Forest Service
2326	-120.029845	39.259954	Unknown	Unknown	No	Single	US Forest Service
2327	-120.029848	39.259114	Unknown	Unknown	No	Single	US Forest Service
2328	-120.029849	39.258499	Unknown	Unknown	No	Single	US Forest Service
2329	-120.029677	39.258076	Unknown	Unknown	No	Single	US Forest Service
2330	-120.029678	39.257396	Unknown	Unknown	No	Single	US Forest Service
2331	-120.029675	39.256567	Unknown	Unknown	No	Single	US Forest Service
2332	-120.029679	39.255766	Unknown	Unknown	No	Single	US Forest Service
2333	-120.029678	39.254979	Unknown	Unknown	No	Single	US Forest Service
2334	-120.029680	39.254159	Unknown	Unknown	No	Single	US Forest Service
2335	-120.029680	39.253337	Unknown	Unknown	Yes	Double	US Forest Service
2336	-120.029681	39.252519	Unknown	Unknown	Yes	Double	US Forest Service
2337	-120.029681	39.251687	Unknown	Unknown	Yes	Double	US Forest Service
2338	-120.029681	39.250881	Unknown	Unknown	Yes	Double	US Forest Service
2339	-120.029681	39.250061	Unknown	Unknown	Yes	Double	US Forest Service
2340	-120.029682	39.249251	Unknown	Unknown	Yes	Double	US Forest Service
2341	-120.029681	39.248441	Unknown	Unknown	Yes	Double	US Forest Service
2342	-120.029682	39.247649	Unknown	Unknown	Yes	Double	US Forest Service
2343	-120.029755	39.247464	Unknown	Unknown	Yes	Double	US Forest Service
2344	-120.029747	39.246985	Unknown	Unknown	Yes	Double	Unclassified
2345	-120.029385	39.246213	Unknown	Unknown	Yes	Double	Unclassified
2346	-120.028995	39.245423	Unknown	Unknown	Yes	Double	Unclassified
2347	-120.028874	39.245163	Unknown	Unknown	No	Double	Unclassified
2348	-120.028502	39.244897	Unknown	Unknown	No	Single	Unclassified
2349	-120.028157	39.244652	Unknown	Unknown	No	Single	Unclassified
2350	-120.027609	39.245171	Unknown	Unknown	No	Single	Unclassified
2351	-120.027556	39.245220	Unknown	Unknown	No	Single	Unclassified
New 625 Line							
625-001	-120.144692	39.166040	70	Self-Supporting Angle	Yes	Double	Unclassified
625-002	-120.145191	39.166206	75	Self-Supporting Angle	Yes	Double	Unclassified

Pole Number	Longitude (decimal degrees)	Latitude (decimal degrees)	Pole Height (feet)	Pole Type	Distribution Underbuild? (Yes/No)	Circuit Type	Jurisdiction
625-003	-120.145888	39.166020	70	Vertical Tangent	Yes	Double	Unclassified
625-004	-120.146388	39.165887	75	Self-Supporting Angle	Yes	Double	Unclassified
625-005	-120.146914	39.165408	70	Vertical Tangent	Yes	Double	Unclassified
625-006	-120.147514	39.164862	70	Vertical Tangent	Yes	Double	Unclassified
625-007	-120.148138	39.164294	75	Self-Supporting Angle	Yes	Double	Unclassified
625-008	-120.149215	39.164375	66	Vertical Tangent	Yes	Double	Unclassified
625-009	-120.149666	39.164409	79	Self-Supporting Angle	Yes	Double	Unclassified
625-010	-120.150399	39.164786	75	Self-Supporting Angle	Yes	Double	Unclassified
625-011	-120.150721	39.165339	75	Self-Supporting Angle	Yes	Double	Unclassified
625-012	-120.151426	39.165338	70	Vertical Tangent	Yes	Double	Unclassified
625-013	-120.152167	39.165336	70	Vertical Tangent	Yes	Double	Unclassified
625-014	-120.152749	39.165335	75	Self-Supporting Angle	Yes	Double	Unclassified
625-015	-120.152759	39.166022	66	Staggered Tangent	No	Single	Unclassified
625-016	-120.152771	39.166889	57	Triangle Tangent	No	Single	Unclassified
625-017	-120.152783	39.167738	53	Triangle Tangent	No	Single	Unclassified
625-018	-120.152796	39.168674	53	Triangle Tangent	No	Single	Unclassified
625-019	-120.152809	39.169651	53	Triangle Tangent	No	Single	US Forest Service
625-020	-120.152823	39.170609	53	Triangle Tangent	No	Single	US Forest Service
625-021	-120.152835	39.171492	66	Triangle Tangent	No	Single	US Forest Service
625-022	-120.152849	39.172460	71	Triangle Tangent	No	Single	US Forest Service
625-023	-120.152860	39.173298	57	Triangle Tangent	No	Single	US Forest Service
625-024	-120.152874	39.174255	57	Triangle Tangent	No	Single	US Forest Service
625-025	-120.152886	39.175163	57	Triangle Tangent	No	Single	US Forest Service
625-026	-120.152900	39.176127	57	Triangle Tangent	No	Single	US Forest Service
625-027	-120.152914	39.177103	62	Triangle Tangent	No	Single	US Forest Service
625-028	-120.152927	39.178088	53	Triangle Tangent	No	Single	US Forest Service
625-029	-120.152941	39.179049	66	Triangle Tangent	No	Single	US Forest Service
625-030	-120.152955	39.180032	57	Triangle Tangent	No	Single	US Forest Service
625-031	-120.152968	39.180970	57	Triangle Tangent	No	Single	US Forest Service
625-032	-120.152979	39.181805	53	Triangle Tangent	No	Single	US Forest Service

Pole Number	Longitude (decimal degrees)	Latitude (decimal degrees)	Pole Height (feet)	Pole Type	Distribution Underbuild? (Yes/No)	Circuit Type	Jurisdiction
625-033	-120.152993	39.182800	57	Staggered Tangent	No	Single	US Forest Service
625-034	-120.153006	39.183713	57	Dead End Angle	No	Single	State
625-035	-120.153893	39.183720	53	Staggered Tangent	No	Single	State
625-036	-120.154935	39.183727	53	Triangle Tangent	No	Single	State
625-037	-120.156200	39.183736	53	Triangle Tangent	No	Single	State
625-038	-120.157392	39.183744	53	Triangle Tangent	No	Single	State
625-039	-120.158634	39.183753	57	Triangle Tangent	No	Single	US Forest Service
625-040	-120.159840	39.183762	53	Staggered Tangent	No	Single	US Forest Service
625-041	-120.160777	39.183768	57	Dead End Angle	No	Single	US Forest Service
625-042	-120.160975	39.184677	57	Staggered Tangent	No	Single	US Forest Service
625-043	-120.161182	39.185624	75	Triangle Tangent	No	Single	US Forest Service
625-044	-120.161394	39.186596	62	Triangle Tangent	No	Single	US Forest Service
625-045	-120.161593	39.187508	66	Triangle Tangent	No	Single	US Forest Service
625-046	-120.161756	39.188254	62	Staggered Tangent	No	Single	US Forest Service
625-047	-120.161886	39.188851	66	Dead End Angle	No	Single	US Forest Service
625-048	-120.162379	39.189355	48	Staggered Tangent	No	Single	US Forest Service
625-049	-120.162898	39.189885	48	Triangle Tangent	No	Single	US Forest Service
625-050	-120.163524	39.190524	57	Triangle Tangent	No	Single	US Forest Service
625-051	-120.164280	39.191296	53	Triangle Tangent	No	Single	US Forest Service
625-052	-120.164922	39.191952	53	Triangle Tangent	No	Single	US Forest Service
625-053	-120.165631	39.192675	53	Staggered Tangent	No	Single	US Forest Service
625-054	-120.166356	39.193416	66	Dead End Angle	No	Single	US Forest Service
625-055	-120.167227	39.193492	53	Staggered Tangent	No	Single	US Forest Service
625-056	-120.168448	39.193599	53	Staggered Tangent	No	Single	US Forest Service
625-057	-120.169643	39.193704	57	Dead End Angle	No	Single	US Forest Service
625-058	-120.169488	39.194658	53	Staggered Tangent	No	Single	US Forest Service
625-059	-120.169352	39.195492	53	Triangle Tangent	No	Single	US Forest Service
625-060	-120.169197	39.196448	62	Triangle Tangent	No	Single	US Forest Service
625-061	-120.169043	39.197396	48	Triangle Tangent	No	Single	US Forest Service
625-062	-120.168953	39.197949	48	Triangle Tangent	No	Single	US Forest Service

Pole Number	Longitude (decimal degrees)	Latitude (decimal degrees)	Pole Height (feet)	Pole Type	Distribution Underbuild? (Yes/No)	Circuit Type	Jurisdiction
625-063	-120.168802	39.198883	48	Triangle Tangent	No	Single	US Forest Service
625-064	-120.168650	39.199817	62	Triangle Tangent	No	Single	US Forest Service
625-065	-120.168500	39.200738	66	Triangle Tangent	No	Single	US Forest Service
625-066	-120.168350	39.201664	62	Triangle Tangent	No	Single	US Forest Service
625-067	-120.168194	39.202623	48	Triangle Tangent	No	Single	US Forest Service
625-068	-120.168047	39.203528	53	Triangle Tangent	No	Single	US Forest Service
625-069	-120.167896	39.204456	57	Triangle Tangent	No	Single	US Forest Service
625-070	-120.167748	39.205369	57	Triangle Tangent	No	Single	US Forest Service
625-071	-120.167599	39.206284	62	Staggered Tangent	No	Single	US Forest Service
625-072	-120.167466	39.207106	70	Angle	No	Single	US Forest Service
625-073	-120.167400	39.208064	57	Staggered Tangent	No	Single	US Forest Service
625-074	-120.167333	39.209023	62	Triangle Tangent	No	Single	US Forest Service
625-075	-120.167278	39.209829	48	Triangle Tangent	No	Single	US Forest Service
625-076	-120.167236	39.210438	75	Staggered Tangent	No	Single	US Forest Service
625-077	-120.167179	39.211259	57	Dead End Angle	No	Single	US Forest Service
625-078	-120.167931	39.212020	75	Staggered Tangent	No	Single	US Forest Service
625-079	-120.168664	39.212760	57	Triangle Tangent	No	Single	US Forest Service
625-080	-120.169159	39.213260	53	Triangle Tangent	No	Single	US Forest Service
625-081	-120.169912	39.214021	66	Triangle Tangent	No	Single	US Forest Service
625-082	-120.170666	39.214783	57	Staggered Tangent	No	Single	US Forest Service
625-083	-120.171419	39.215544	66	Dead End Angle	No	Single	US Forest Service
625-084	-120.171080	39.216151	71	Staggered Tangent	No	Single	US Forest Service
625-085	-120.170690	39.216850	57	Dead End Angle	No	Single	US Forest Service
625-086	-120.169677	39.216764	57	Staggered Tangent	No	Single	US Forest Service
625-087	-120.168456	39.216661	57	Triangle Tangent	No	Single	US Forest Service
625-088	-120.167386	39.216570	53	Triangle Tangent	No	Single	US Forest Service
625-089	-120.166189	39.216469	57	Triangle Tangent	No	Single	US Forest Service
625-090	-120.165207	39.216386	53	Staggered Tangent	No	Single	US Forest Service
625-091	-120.164199	39.216301	66	Dead End Angle	No	Single	US Forest Service
625-092	-120.163872	39.216887	48	Staggered Tangent	No	Single	US Forest Service

Pole Number	Longitude (decimal degrees)	Latitude (decimal degrees)	Pole Height (feet)	Pole Type	Distribution Underbuild? (Yes/No)	Circuit Type	Jurisdiction
625-093	-120.163564	39.217438	53	Triangle Tangent	No	Single	US Forest Service
625-094	-120.163135	39.218207	57	Staggered Tangent	No	Single	US Forest Service
625-095	-120.162720	39.218950	61	Dead End Angle	No	Single	US Forest Service
625-096	-120.161585	39.219298	53	Staggered Tangent	No	Single	US Forest Service
625-097	-120.160407	39.219660	57	Triangle Tangent	No	Single	US Forest Service
625-098	-120.159371	39.219977	53	Triangle Tangent	No	Single	US Forest Service
625-099	-120.158281	39.220312	53	Triangle Tangent	No	Single	US Forest Service
625-100	-120.157204	39.220642	53	Triangle Tangent	No	Single	US Forest Service
625-101	-120.156078	39.220988	53	Staggered Tangent	No	Single	US Forest Service
625-102	-120.155075	39.221295	66	Angle	No	Single	US Forest Service
625-103	-120.154412	39.221730	48	Staggered Tangent	No	Single	US Forest Service
625-104	-120.153746	39.222167	75	Triangle Tangent	No	Single	US Forest Service
625-105	-120.153133	39.222569	71	Triangle Tangent	No	Single	US Forest Service
625-106	-120.152272	39.223133	48	Triangle Tangent	No	Single	US Forest Service
625-107	-120.151546	39.223609	48	Triangle Tangent	No	Single	US Forest Service
625-108	-120.150682	39.224175	53	Triangle Tangent	No	Single	US Forest Service
625-109	-120.149872	39.224706	57	Triangle Tangent	No	Single	US Forest Service
625-110	-120.149022	39.225264	53	Triangle Tangent	No	Single	US Forest Service
625-111	-120.148212	39.225794	53	Triangle Tangent	No	Single	US Forest Service
625-112	-120.147430	39.226308	53	Triangle Tangent	No	Single	US Forest Service
625-113	-120.146620	39.226838	53	Staggered Tangent	No	Single	US Forest Service
625-114	-120.145829	39.227357	66	Dead End Angle	No	Single	US Forest Service
625-115	-120.144636	39.227368	57	Staggered Tangent	No	Single	US Forest Service
625-116	-120.143559	39.227379	57	Staggered Tangent	No	Single	US Forest Service
625-117	-120.142635	39.227388	57	Dead End Angle	No	Single	US Forest Service
625-118	-120.142577	39.228310	62	Staggered Tangent	No	Single	Unclassified
625-119	-120.142519	39.229245	62	Staggered Tangent	No	Single	Unclassified
625-120	-120.142466	39.230091	66	Dead End Angle	No	Single	Unclassified
625-121	-120.141262	39.229952	57	Staggered Tangent	No	Single	US Forest Service
625-122	-120.140054	39.229812	57	Triangle Tangent	No	Single	US Forest Service

Pole Number	Longitude (decimal degrees)	Latitude (decimal degrees)	Pole Height (feet)	Pole Type	Distribution Underbuild? (Yes/No)	Circuit Type	Jurisdiction
625-123	-120.138902	39.229679	53	Triangle Tangent	No	Single	US Forest Service
625-124	-120.137700	39.229540	57	Staggered Tangent	No	Single	US Forest Service
625-125	-120.136534	39.229405	70	Dead End Angle	No	Single	US Forest Service
625-126	-120.135630	39.229984	53	Staggered Tangent	No	Single	US Forest Service
625-127	-120.134759	39.230541	70	Angle	No	Single	US Forest Service
625-128	-120.133621	39.230818	53	Staggered Tangent	No	Single	US Forest Service
625-129	-120.132626	39.231059	53	Triangle Tangent	No	Single	US Forest Service
625-130	-120.131547	39.231321	53	Triangle Tangent	No	Single	US Forest Service
625-131	-120.130514	39.231572	57	Staggered Tangent	No	Single	US Forest Service
625-132	-120.129390	39.231845	61	Angle	No	Single	US Forest Service
625-133	-120.128724	39.232204	53	Staggered Tangent	No	Single	US Forest Service
625-134	-120.127770	39.232719	48	Staggered Tangent	No	Single	US Forest Service
625-135	-120.126909	39.233184	57	Dead End Angle	No	Single	US Forest Service
625-136	-120.125946	39.233105	57	Staggered Tangent	No	Single	US Forest Service
625-137	-120.124822	39.233013	53	Triangle Tangent	No	Single	US Forest Service
625-138	-120.123595	39.232913	53	Triangle Tangent	No	Single	US Forest Service
625-139	-120.122447	39.232819	53	Triangle Tangent	No	Single	US Forest Service
625-140	-120.121497	39.232741	53	Triangle Tangent	No	Single	US Forest Service
625-141	-120.120292	39.232642	48	Triangle Tangent	No	Single	US Forest Service
625-142	-120.119092	39.232544	53	Staggered Tangent	No	Single	US Forest Service
625-143	-120.118195	39.232471	61	Dead End Angle	No	Single	US Forest Service
625-144	-120.117668	39.232954	48	Staggered Tangent	No	Single	US Forest Service
625-145	-120.117157	39.233423	53	Triangle Tangent	No	Single	US Forest Service
625-146	-120.116359	39.234156	53	Triangle Tangent	No	Single	US Forest Service
625-147	-120.115747	39.234717	53	Staggered Tangent	No	Single	US Forest Service
625-148	-120.115013	39.235392	66	Dead End Angle	No	Single	US Forest Service
625-149	-120.114999	39.236380	53	Staggered Tangent	No	Single	US Forest Service
625-150	-120.114987	39.237192	53	Triangle Tangent	No	Single	US Forest Service
625-151	-120.114975	39.238050	53	Triangle Tangent	No	Single	US Forest Service
625-152	-120.114965	39.238788	48	Triangle Tangent	No	Single	US Forest Service

Pole Number	Longitude (decimal degrees)	Latitude (decimal degrees)	Pole Height (feet)	Pole Type	Distribution Underbuild? (Yes/No)	Circuit Type	Jurisdiction
625-153	-120.114951	39.239743	48	Staggered Tangent	No	Single	US Forest Service
625-154	-120.114938	39.240682	75	Angle	No	Single	US Forest Service
625-155	-120.114626	39.241606	57	Staggered Tangent	No	Single	US Forest Service
625-156	-120.114378	39.242339	53	Triangle Tangent	No	Single	US Forest Service
625-157	-120.114064	39.243266	48	Triangle Tangent	No	Single	US Forest Service
625-158	-120.113812	39.244012	53	Triangle Tangent	No	Single	US Forest Service
625-159	-120.113514	39.244894	48	Triangle Tangent	No	Single	US Forest Service
625-160	-120.113210	39.245791	48	Triangle Tangent	No	Single	US Forest Service
625-161	-120.112939	39.246593	48	Triangle Tangent	No	Single	US Forest Service
625-162	-120.112688	39.247334	48	Triangle Tangent	No	Single	US Forest Service
625-163	-120.112381	39.248242	53	Staggered Tangent	No	Single	US Forest Service
625-164	-120.112080	39.249132	57	Dead End Angle	No	Single	US Forest Service
625-165	-120.111124	39.249152	57	Staggered Tangent	No	Single	US Forest Service
625-166	-120.109917	39.249176	53	Triangle Tangent	No	Single	US Forest Service
625-167	-120.108688	39.249202	57	Triangle Tangent	No	Single	US Forest Service
625-168	-120.107502	39.249226	57	Triangle Tangent	No	Single	US Forest Service
625-169	-120.106394	39.249249	53	Triangle Tangent	No	Single	US Forest Service
625-170	-120.105236	39.249273	53	Triangle Tangent	No	Single	US Forest Service
625-171	-120.104032	39.249297	53	Triangle Tangent	No	Single	US Forest Service
625-172	-120.102871	39.249321	53	Triangle Tangent	No	Single	US Forest Service
625-173	-120.101843	39.249342	48	Triangle Tangent	No	Single	US Forest Service
625-174	-120.100717	39.249366	53	Triangle Tangent	No	Single	US Forest Service
625-175	-120.099492	39.249391	57	Triangle Tangent	No	Single	US Forest Service
625-176	-120.098374	39.249414	57	Triangle Tangent	No	Single	US Forest Service
625-177	-120.097144	39.249439	57	Triangle Tangent	No	Single	US Forest Service
625-178	-120.095916	39.249464	53	Triangle Tangent	No	Single	US Forest Service
625-179	-120.094713	39.249489	53	Triangle Tangent	No	Single	US Forest Service
625-180	-120.093516	39.249513	53	Triangle Tangent	No	Single	US Forest Service
625-181	-120.092305	39.249538	53	Triangle Tangent	No	Single	US Forest Service
625-182	-120.091137	39.249562	57	Triangle Tangent	No	Single	US Forest Service

Pole Number	Longitude (decimal degrees)	Latitude (decimal degrees)	Pole Height (feet)	Pole Type	Distribution Underbuild? (Yes/No)	Circuit Type	Jurisdiction
625-183	-120.089912	39.249587	57	Triangle Tangent	No	Single	US Forest Service
625-184	-120.088722	39.249611	53	Staggered Tangent	No	Single	US Forest Service
625-185	-120.087657	39.249633	61	Dead End Angle	No	Single	US Forest Service
625-186	-120.086830	39.250173	57	Staggered Tangent	No	Single	US Forest Service
625-187	-120.085976	39.250731	66	Triangle Tangent	No	Single	US Forest Service
625-188	-120.084993	39.251373	71	Staggered Tangent	No	Single	US Forest Service
625-189	-120.084047	39.251991	57	Dead End Angle	No	Single	US Forest Service
625-190	-120.083932	39.252379	57	Staggered Tangent	No	Single	US Forest Service
625-191	-120.083668	39.253264	53	Triangle Tangent	No	Single	US Forest Service
625-192	-120.083381	39.254230	66	Triangle Tangent	No	Single	US Forest Service
625-193	-120.083124	39.255092	53	Triangle Tangent	No	Single	US Forest Service
625-194	-120.082859	39.255982	53	Triangle Tangent	No	Single	US Forest Service
625-195	-120.082600	39.256849	53	Staggered Tangent	No	Single	US Forest Service
625-196	-120.082338	39.257731	57	Dead End Angle	No	Single	US Forest Service
625-197	-120.081111	39.257724	75	Staggered Tangent	No	Single	US Forest Service
625-198	-120.079878	39.257716	62	Triangle Tangent	No	Single	US Forest Service
625-199	-120.078642	39.257709	53	Triangle Tangent	No	Single	US Forest Service
625-200	-120.077618	39.257703	53	Triangle Tangent	No	Single	US Forest Service
625-201	-120.076792	39.257698	48	Staggered Tangent	No	Single	US Forest Service
625-202	-120.076135	39.257695	61	Dead End Angle	No	Single	US Forest Service
625-203	-120.075807	39.258156	48	Staggered Tangent	No	Single	US Forest Service
625-204	-120.075238	39.258956	53	Triangle Tangent	No	Single	US Forest Service
625-205	-120.074667	39.259759	57	Triangle Tangent	No	Single	Unclassified
625-206	-120.074127	39.260518	53	Triangle Tangent	No	Single	Unclassified
625-207	-120.073612	39.261241	53	Triangle Tangent	No	Single	Unclassified
625-208	-120.073036	39.262051	57	Staggered Tangent	No	Single	Unclassified
625-209	-120.072436	39.262894	61	Dead End Angle	No	Single	Unclassified
625-210	-120.071702	39.262842	61	Dead End Angle	No	Single	Unclassified
625-211	-120.071024	39.263366	57	Staggered Tangent	Yes	Single	Unclassified
625-212	-120.070453	39.263808	57	Dead End Angle	Yes	Single	Unclassified

Pole Number	Longitude (decimal degrees)	Latitude (decimal degrees)	Pole Height (feet)	Pole Type	Distribution Underbuild? (Yes/No)	Circuit Type	Jurisdiction
625-213	-120.069643	39.263979	48	Staggered Tangent	Yes	Single	Unclassified
625-214	-120.068460	39.264229	48	Triangle Tangent	Yes	Single	Unclassified
625-215	-120.067274	39.264479	53	Triangle Tangent	Yes	Single	US Forest Service
625-216	-120.066136	39.264720	53	Triangle Tangent	No	Single	US Forest Service
625-217	-120.064967	39.264967	53	Triangle Tangent	No	Single	Unclassified
625-218	-120.063855	39.265202	57	Triangle Tangent	No	Single	Unclassified
625-219	-120.062809	39.265423	53	Triangle Tangent	No	Single	Unclassified
625-220	-120.061619	39.265674	53	Triangle Tangent	No	Single	Unclassified
625-221	-120.060467	39.265917	53	Triangle Tangent	No	Single	Unclassified
625-222	-120.059384	39.266146	53	Triangle Tangent	No	Single	Unclassified
625-223	-120.058347	39.266365	53	Staggered Tangent	No	Single	Unclassified
625-224	-120.057249	39.266597	66	Dead End Angle	No	Single	US Forest Service
625-225	-120.056133	39.266389	53	Staggered Tangent	No	Single	US Forest Service
625-226	-120.054979	39.266175	53	Triangle Tangent	No	Single	US Forest Service
625-227	-120.053791	39.265954	62	Triangle Tangent	No	Single	US Forest Service
625-228	-120.052630	39.265738	66	Triangle Tangent	No	Single	US Forest Service
625-229	-120.051441	39.265516	57	Triangle Tangent	No	Single	US Forest Service
625-230	-120.050407	39.265324	53	Triangle Tangent	No	Single	US Forest Service
625-231	-120.049267	39.265112	57	Triangle Tangent	No	Single	US Forest Service
625-232	-120.048068	39.264889	57	Triangle Tangent	No	Single	US Forest Service
625-233	-120.047099	39.264709	53	Triangle Tangent	No	Single	US Forest Service
625-234	-120.045959	39.264496	71	Triangle Tangent	No	Single	US Forest Service
625-235	-120.044760	39.264273	71	Triangle Tangent	No	Single	US Forest Service
625-236	-120.043582	39.264054	48	Triangle Tangent	No	Single	US Forest Service
625-237	-120.042716	39.263893	57	Triangle Tangent	No	Single	US Forest Service
625-238	-120.041517	39.263670	53	Triangle Tangent	No	Single	US Forest Service
625-239	-120.040336	39.263450	71	Triangle Tangent	No	Single	US Forest Service
625-240	-120.039161	39.263231	75	Triangle Tangent	No	Single	US Forest Service
625-241	-120.037966	39.263008	57	Triangle Tangent	No	Single	US Forest Service
625-242	-120.036767	39.262785	57	Triangle Tangent	No	Single	US Forest Service

Pole Number	Longitude (decimal degrees)	Latitude (decimal degrees)	Pole Height (feet)	Pole Type	Distribution Underbuild? (Yes/No)	Circuit Type	Jurisdiction
625-243	-120.035565	39.262561	57	Triangle Tangent	No	Single	US Forest Service
625-244	-120.034356	39.262336	57	Triangle Tangent	No	Single	US Forest Service
625-245	-120.033240	39.262128	53	Triangle Tangent	No	Single	US Forest Service
625-246	-120.032034	39.261904	53	Triangle Tangent	No	Single	US Forest Service
625-247	-120.030835	39.261680	62	Staggered Tangent	No	Single	US Forest Service
625-248	-120.029840	39.261495	79	Dead End Angle	No	Single	US Forest Service
625-249	-120.029843	39.260754	53	Staggered Tangent	No	Single	US Forest Service
625-250	-120.029845	39.260013	53	Triangle Tangent	No	Single	US Forest Service
625-251	-120.029847	39.259271	53	Staggered Tangent	No	Single	US Forest Service
625-252	-120.029849	39.258499	66	Angle	No	Single	US Forest Service
625-253	-120.029677	39.258076	70	Angle	No	Single	US Forest Service
625-254	-120.029681	39.257253	75	Staggered Tangent	No	Single	US Forest Service
625-255	-120.029685	39.256429	71	Triangle Tangent	No	Single	US Forest Service
625-256	-120.029689	39.255606	57	Triangle Tangent	No	Single	US Forest Service
625-257	-120.029692	39.254782	70	Staggered Tangent	No	Single	US Forest Service
625-258	-120.029696	39.254033	70	Self-Supporting Angle	Yes	Double	US Forest Service
625-259	-120.029699	39.253333	75	Vertical Tangent	Yes	Double	US Forest Service
625-260	-120.029702	39.252633	70	Vertical Tangent	Yes	Double	US Forest Service
625-261	-120.029706	39.251933	70	Vertical Tangent	Yes	Double	US Forest Service
625-262	-120.029709	39.251232	70	Vertical Tangent	Yes	Double	US Forest Service
625-263	-120.029712	39.250532	66	Vertical Tangent	Yes	Double	US Forest Service
625-264	-120.029715	39.249832	70	Vertical Tangent	Yes	Double	US Forest Service
625-265	-120.029719	39.249132	75	Vertical Tangent	Yes	Double	US Forest Service
625-266	-120.029722	39.248432	75	Vertical Tangent	Yes	Double	US Forest Service
625-267	-120.029725	39.247739	75	Vertical Tangent	Yes	Double	US Forest Service
625-268	-120.029747	39.246982	75	Self-Supporting Angle	Yes	Double	Unclassified
625-269	-120.029456	39.246375	66	Vertical Tangent	Yes	Double	Unclassified
625-270	-120.029165	39.245768	70	Vertical Tangent	Yes	Double	Unclassified
625-271	-120.028874	39.245161	70	Self-Supporting Angle	Yes	Double	Unclassified
625-272	-120.028326	39.245378	52	Vertical Tangent	No	Single	Unclassified

Pole Number	Longitude (decimal degrees)	Latitude (decimal degrees)	Pole Height (feet)	Pole Type	Distribution Underbuild? (Yes/No)	Circuit Type	Jurisdiction
625-273	-120.027876	39.245555	52	Vertical Tangent	No	Single	Unclassified
625-274	-120.028501	39.244896	52	Vertical Tangent	No	Single	Unclassified
625-275	-120.028157	39.244652	61	Self-Supporting Angle	No	Single	Unclassified
625-276	-120.027556	39.245220	52	Self-Supporting Angle	No	Single	Unclassified
650 Line							
650-001	-120.137281	39.296962	66	Dead End Angle	Yes	Single	Unclassified
650-002	-120.136332	39.296899	52	Triangle Tangent	Yes	Single	Unclassified
650-003	-120.135382	39.296836	52	Triangle Tangent	Yes	Single	Unclassified
650-004	-120.134431	39.296773	52	Triangle Tangent	Yes	Single	Unclassified
650-005	-120.133481	39.296710	52	Triangle Tangent	Yes	Single	Unclassified
650-006	-120.132531	39.296647	52	Triangle Tangent	Yes	Single	Unclassified
650-007	-120.131581	39.296584	52	Triangle Tangent	Yes	Single	Unclassified
650-008	-120.130630	39.296521	52	Triangle Tangent	Yes	Single	Unclassified
650-009	-120.129680	39.296458	52	Triangle Tangent	Yes	Single	Unclassified
650-010	-120.128724	39.296394	61	Angle	Yes	Single	Unclassified
650-011	-120.127736	39.296516	52	Triangle Tangent	Yes	Single	Military
650-012	-120.126745	39.296637	52	Triangle Tangent	Yes	Single	Military
650-013	-120.125754	39.296759	52	Triangle Tangent	Yes	Single	Military
650-014	-120.124763	39.296881	52	Triangle Tangent	Yes	Single	Military
650-015	-120.123772	39.297002	52	Triangle Tangent	Yes	Single	Military
650-016	-120.122782	39.297124	52	Triangle Tangent	Yes	Single	Unclassified
650-017	-120.121791	39.297246	52	Triangle Tangent	Yes	Single	Unclassified
650-018	-120.120800	39.297368	52	Triangle Tangent	Yes	Single	Unclassified
650-019	-120.119809	39.297489	52	Triangle Tangent	Yes	Single	Unclassified
650-020	-120.118818	39.297611	52	Triangle Tangent	Yes	Single	Unclassified
650-021	-120.117828	39.297733	52	Triangle Tangent	Yes	Single	Unclassified
650-022	-120.116829	39.297855	66	Dead End Angle	Yes	Single	Unclassified
650-023	-120.116565	39.298619	52	Triangle Tangent	Yes	Single	Unclassified
650-024	-120.116300	39.299384	52	Triangle Tangent	Yes	Single	Unclassified
650-025	-120.116030	39.300165	52	Triangle Tangent	Yes	Single	Unclassified

Pole Number	Longitude (decimal degrees)	Latitude (decimal degrees)	Pole Height (feet)	Pole Type	Distribution Underbuild? (Yes/No)	Circuit Type	Jurisdiction
650-026	-120.115760	39.300945	52	Triangle Tangent	Yes	Single	Unclassified
650-027	-120.115490	39.301725	52	Triangle Tangent	Yes	Single	Unclassified
650-028	-120.115276	39.302341	66	Dead End Angle	Yes	Single	Unclassified
650-029	-120.114438	39.302280	52	Triangle Tangent	Yes	Single	Unclassified
650-030	-120.113678	39.302225	52	Triangle Tangent	Yes	Single	Unclassified
650-031	-120.112896	39.302169	52	Triangle Tangent	Yes	Single	Unclassified
650-032	-120.112051	39.302108	52	Triangle Tangent	Yes	Single	Unclassified
650-033	-120.111269	39.302051	52	Triangle Tangent	Yes	Single	Unclassified
650-034	-120.110517	39.301997	52	Triangle Tangent	Yes	Single	Unclassified
650-035	-120.109776	39.301943	52	Triangle Tangent	Yes	Single	Unclassified
650-036	-120.109021	39.301889	66	Dead End Angle	Yes	Single	Unclassified
650-037	-120.108378	39.301332	52	Triangle Tangent	Yes	Single	Unclassified
650-038	-120.107733	39.300773	52	Triangle Tangent	Yes	Single	Unclassified
650-039	-120.107089	39.300216	52	Triangle Tangent	Yes	Single	Unclassified
650-040	-120.106452	39.299664	52	Triangle Tangent	Yes	Single	Unclassified
650-041	-120.105818	39.299116	52	Triangle Tangent	Yes	Single	Unclassified
650-042	-120.105182	39.298565	52	Triangle Tangent	Yes	Single	Unclassified
650-043	-120.104543	39.298012	52	Triangle Tangent	Yes	Single	Unclassified
650-044	-120.103903	39.297458	66	Dead End Angle	Yes	Single	Unclassified
650-045	-120.103913	39.296782	52	Triangle Tangent	Yes	Single	Unclassified
650-046	-120.103923	39.296157	52	Triangle Tangent	Yes	Single	Unclassified
650-047	-120.103929	39.295523	61	Angle	Yes	Single	Unclassified
650-048	-120.103570	39.294981	52	Triangle Tangent	Yes	Single	Unclassified
650-049	-120.103209	39.294438	52	Triangle Tangent	Yes	Single	Unclassified
650-050	-120.102870	39.293927	61	Angle	Yes	Single	Unclassified
650-051	-120.102652	39.293210	52	Triangle Tangent	Yes	Single	Unclassified
650-052	-120.102438	39.292502	52	Triangle Tangent	Yes	Single	Unclassified
650-053	-120.102232	39.291819	52	Triangle Tangent	Yes	Single	Unclassified
650-054	-120.102012	39.291090	57	Triangle Tangent	Yes	Single	Unclassified
650-055	-120.101800	39.290387	66	Dead End Angle	Yes	Single	Unclassified

Pole Number	Longitude (decimal degrees)	Latitude (decimal degrees)	Pole Height (feet)	Pole Type	Distribution Underbuild? (Yes/No)	Circuit Type	Jurisdiction
650-056	-120.102105	39.289851	52	Triangle Tangent	Yes	Single	Unclassified
650-057	-120.102383	39.289361	52	Triangle Tangent	Yes	Single	Unclassified
650-058	-120.102681	39.288836	52	Triangle Tangent	Yes	Single	Unclassified
650-059	-120.103033	39.288217	52	Triangle Tangent	Yes	Single	Unclassified
650-060	-120.103393	39.287583	52	Triangle Tangent	Yes	Single	Unclassified
650-061	-120.103751	39.286953	61	Angle	Yes	Single	Unclassified
650-062	-120.103883	39.286149	52	Triangle Tangent	Yes	Single	Unclassified
650-063	-120.104014	39.285343	52	Triangle Tangent	Yes	Single	Unclassified
650-064	-120.104159	39.284456	61	Self-Supporting Angle	Yes	Double	Unclassified
650-065	-120.104250	39.283899	52	Triangle Tangent	Yes	Single	Unclassified
650-066	-120.104349	39.283296	66	Dead End Angle	Yes	Single	Unclassified
650-067	-120.104287	39.282806	52	Triangle Tangent	Yes	Single	Unclassified
650-068	-120.104219	39.282263	61	Angle	Yes	Single	Unclassified
650-069	-120.103913	39.281674	52	Triangle Tangent	Yes	Single	Unclassified
650-070	-120.103615	39.281103	52	Triangle Tangent	Yes	Single	Unclassified
650-071	-120.103299	39.280494	61	Angle	Yes	Single	Unclassified
650-072	-120.103317	39.279801	52	Triangle Tangent	Yes	Single	Unclassified
650-073	-120.103335	39.279123	52	Triangle Tangent	Yes	Single	Unclassified
650-074	-120.103352	39.278442	61	Switch	Yes	Single	Unclassified
650-075	-120.103370	39.277743	61	Angle	Yes	Single	Unclassified
650-076	-120.103133	39.277168	52	Triangle Tangent	Yes	Single	Unclassified
650-077	-120.102782	39.276618	57	Triangle Tangent	Yes	Single	Unclassified
650-078	-120.102427	39.276061	52	Triangle Tangent	Yes	Single	Unclassified
650-079	-120.102071	39.275503	61	Angle	Yes	Single	Unclassified
650-080	-120.101605	39.274975	52	Triangle Tangent	Yes	Single	Unclassified
650-081	-120.101127	39.274433	52	Triangle Tangent	Yes	Single	Unclassified
650-082	-120.100666	39.273911	52	Triangle Tangent	Yes	Single	Unclassified
650-083	-120.100202	39.273385	52	Triangle Tangent	Yes	Single	Unclassified
650-084	-120.099758	39.272881	66	Dead End Angle	Yes	Single	Unclassified
650-085	-120.098777	39.272775	61	Angle	Yes	Single	Unclassified

Pole Number	Longitude (decimal degrees)	Latitude (decimal degrees)	Pole Height (feet)	Pole Type	Distribution Underbuild? (Yes/No)	Circuit Type	Jurisdiction
650-086	-120.097892	39.272523	52	Triangle Tangent	Yes	Single	Unclassified
650-087	-120.096988	39.272266	57	Triangle Tangent	Yes	Single	Unclassified
650-088	-120.096107	39.272016	52	Triangle Tangent	Yes	Single	Unclassified
650-089	-120.095226	39.271766	52	Triangle Tangent	Yes	Single	Unclassified
650-090	-120.094325	39.271510	52	Triangle Tangent	Yes	Single	Unclassified
650-091	-120.093438	39.271258	52	Triangle Tangent	Yes	Single	Unclassified
650-092	-120.092526	39.270999	61	Angle	Yes	Single	Unclassified
650-093	-120.091725	39.270944	52	Triangle Tangent	Yes	Single	Unclassified
650-094	-120.090790	39.270881	57	Triangle Tangent	Yes	Single	Unclassified
650-095	-120.089879	39.270819	52	Triangle Tangent	Yes	Single	Unclassified
650-096	-120.088944	39.270755	52	Triangle Tangent	Yes	Single	Unclassified
650-097	-120.088033	39.270693	52	Triangle Tangent	Yes	Single	Unclassified
650-098	-120.087154	39.270633	52	Triangle Tangent	Yes	Single	Unclassified
650-099	-120.086247	39.270571	61	Angle	Yes	Single	Unclassified
650-100	-120.085420	39.270433	52	Triangle Tangent	Yes	Single	Unclassified
650-101	-120.084614	39.270299	52	Triangle Tangent	Yes	Single	Unclassified
650-102	-120.083808	39.270164	52	Triangle Tangent	Yes	Single	Unclassified
650-103	-120.082981	39.270026	52	Triangle Tangent	Yes	Single	Unclassified
650-104	-120.082153	39.269888	52	Triangle Tangent	Yes	Single	Unclassified
650-105	-120.081341	39.269752	61	Angle	Yes	Single	Unclassified
650-106	-120.080653	39.269460	52	Triangle Tangent	Yes	Single	Unclassified
650-107	-120.079906	39.269142	52	Triangle Tangent	Yes	Single	Unclassified
650-108	-120.079207	39.268845	61	Angle	Yes	Single	Unclassified
650-109	-120.078545	39.268431	52	Triangle Tangent	Yes	Single	Unclassified
650-110	-120.077978	39.268076	52	Triangle Tangent	Yes	Single	Unclassified
650-111	-120.077375	39.267698	66	Dead End Angle	Yes	Single	Unclassified
650-112	-120.076669	39.267676	52	Triangle Tangent	Yes	Single	Unclassified
650-113	-120.075990	39.267656	52	Triangle Tangent	Yes	Single	Unclassified
650-114	-120.075315	39.267635	52	Triangle Tangent	Yes	Single	Unclassified
650-115	-120.074651	39.267614	61	Angle	Yes	Single	Unclassified

Pole Number	Longitude (decimal degrees)	Latitude (decimal degrees)	Pole Height (feet)	Pole Type	Distribution Underbuild? (Yes/No)	Circuit Type	Jurisdiction
650-116	-120.073897	39.267777	52	Triangle Tangent	Yes	Single	Unclassified
650-117	-120.073136	39.267938	66	Dead End Angle	Yes	Single	Unclassified
650-118	-120.072563	39.267439	57	Triangle Tangent	Yes	Single	Unclassified
650-119	-120.072169	39.267096	52	Triangle Tangent	Yes	Single	Unclassified
650-120	-120.071837	39.266807	66	Dead End Angle	Yes	Single	Unclassified
650-121	-120.071814	39.266147	52	Triangle Tangent	Yes	Single	Unclassified
650-122	-120.071792	39.265486	52	Triangle Tangent	Yes	Single	Unclassified
650-123	-120.071769	39.264824	52	Triangle Tangent	Yes	Single	Unclassified
650-124	-120.071746	39.264163	52	Triangle Tangent	Yes	Single	Unclassified
650-125	-120.071724	39.263502	52	Triangle Tangent	Yes	Single	Unclassified
650-126	-120.071701	39.262844	52	Triangle Tangent	Yes	Single	Unclassified
650-127	-120.071618	39.262076	57	Triangle Tangent	Yes	Single	Unclassified
650-128	-120.071535	39.261311	66	Dead End Angle	Yes	Single	Unclassified
650-129	-120.071162	39.260842	52	Triangle Tangent	Yes	Single	Unclassified
650-130	-120.070802	39.260389	52	Triangle Tangent	No	Single	Unclassified
650-131	-120.070430	39.259921	61	Angle	No	Single	Unclassified
650-132	-120.069733	39.259484	52	Triangle Tangent	No	Single	Unclassified
650-133	-120.069023	39.259037	66	Dead End Angle	No	Single	US Forest Service
650-134	-120.068171	39.258867	57	Triangle Tangent	No	Single	US Forest Service
650-135	-120.067291	39.258691	57	Triangle Tangent	No	Single	US Forest Service
650-136	-120.066569	39.258547	66	Dead End Angle	No	Single	US Forest Service
650-137	-120.065663	39.258639	57	Triangle Tangent	No	Single	US Forest Service
650-138	-120.064757	39.258731	57	Triangle Tangent	No	Single	US Forest Service
650-139	-120.063850	39.258824	57	Triangle Tangent	No	Single	US Forest Service
650-140	-120.062941	39.258916	61	Angle	No	Single	US Forest Service
650-141	-120.062066	39.258875	52	Triangle Tangent	Yes	Single	US Forest Service
650-142	-120.061189	39.258833	52	Triangle Tangent	Yes	Single	US Forest Service
650-143	-120.060312	39.258791	52	Triangle Tangent	Yes	Single	US Forest Service
650-144	-120.059434	39.258749	52	Triangle Tangent	Yes	Single	US Forest Service
650-145	-120.058557	39.258708	52	Triangle Tangent	Yes	Single	US Forest Service

Pole Number	Longitude (decimal degrees)	Latitude (decimal degrees)	Pole Height (feet)	Pole Type	Distribution Underbuild? (Yes/No)	Circuit Type	Jurisdiction
650-146	-120.057680	39.258666	52	Triangle Tangent	Yes	Single	US Forest Service
650-147	-120.056802	39.258624	52	Triangle Tangent	Yes	Single	US Forest Service
650-148	-120.055925	39.258582	52	Triangle Tangent	Yes	Single	US Forest Service
650-149	-120.055047	39.258540	52	Triangle Tangent	Yes	Single	US Forest Service
650-150	-120.054170	39.258499	52	Triangle Tangent	Yes	Single	US Forest Service
650-151	-120.053293	39.258457	57	Triangle Tangent	Yes	Single	US Forest Service
650-152	-120.052408	39.258415	52	Triangle Tangent	Yes	Single	US Forest Service
650-153	-120.051528	39.258373	57	Triangle Tangent	Yes	Single	US Forest Service
650-154	-120.050669	39.258332	66	Dead End Angle	Yes	Single	US Forest Service
650-155	-120.049806	39.258120	52	Triangle Tangent	Yes	Single	US Forest Service
650-156	-120.048941	39.257908	52	Triangle Tangent	Yes	Single	US Forest Service
650-157	-120.048076	39.257695	52	Triangle Tangent	Yes	Single	US Forest Service
650-158	-120.047211	39.257483	52	Triangle Tangent	Yes	Single	Unclassified
650-159	-120.046346	39.257271	52	Triangle Tangent	Yes	Single	Unclassified
650-160	-120.045469	39.257056	66	Dead End Angle	Yes	Single	Unclassified
650-161	-120.044801	39.256473	52	Triangle Tangent	Yes	Single	Unclassified
650-162	-120.044133	39.255888	52	Triangle Tangent	Yes	Single	Unclassified
650-163	-120.043460	39.255298	66	Angle	Yes	Single	Unclassified
650-164	-120.042707	39.254954	57	Triangle Tangent	Yes	Single	Unclassified
650-165	-120.041931	39.254599	57	Triangle Tangent	Yes	Single	Unclassified
650-166	-120.041225	39.254277	57	Triangle Tangent	Yes	Single	Unclassified
650-167	-120.040507	39.253949	66	Dead End Angle	Yes	Single	Unclassified
650-168	-120.039899	39.253954	48	Triangle Tangent	Yes	Single	Unclassified
650-169	-120.039050	39.253961	48	Triangle Tangent	Yes	Single	Unclassified
650-170	-120.038184	39.253968	48	Triangle Tangent	Yes	Single	Unclassified
650-171	-120.037341	39.253975	48	Triangle Tangent	Yes	Single	Unclassified
650-172	-120.036611	39.253980	48	Triangle Tangent	Yes	Single	Unclassified
650-173	-120.035892	39.253986	48	Triangle Tangent	Yes	Single	Unclassified
650-174	-120.035135	39.253992	48	Triangle Tangent	Yes	Single	Unclassified
650-175	-120.034311	39.253999	48	Triangle Tangent	Yes	Single	Unclassified

Pole Number	Longitude (decimal degrees)	Latitude (decimal degrees)	Pole Height (feet)	Pole Type	Distribution Underbuild? (Yes/No)	Circuit Type	Jurisdiction
650-176	-120.033478	39.254005	48	Triangle Tangent	Yes	Single	Unclassified
650-177	-120.032626	39.254012	48	Triangle Tangent	Yes	Single	Unclassified
650-178	-120.031778	39.254019	52	Triangle Tangent	Yes	Single	Unclassified
650-179	-120.031094	39.254024	48	Triangle Tangent	Yes	Single	Unclassified
650-180	-120.030414	39.254030	57	Triangle Tangent	Yes	Single	Unclassified
650 Line to be Removed							
650R-001	-120.179634	39.332130	Unknown	Unknown	Yes	Single	Unclassified
650R-002	-120.180215	39.331935	Unknown	Unknown	Yes	Single	Unclassified
650R-003	-120.181058	39.331651	Unknown	Unknown	Yes	Single	Unclassified
650R-004	-120.181110	39.330801	Unknown	Unknown	Yes	Single	Unclassified
650R-005	-120.181074	39.331387	Unknown	Unknown	Yes	Single	Unclassified
650R-006	-120.026446	39.243224	Unknown	Unknown	Yes	Single	Unclassified
650R-007	-120.027007	39.243213	Unknown	Unknown	Yes	Single	Unclassified
650R-008	-120.027012	39.243857	Unknown	Unknown	Yes	Single	Unclassified
650R-009	-120.027566	39.244242	Unknown	Unknown	Yes	Single	Unclassified
650R-010	-120.028110	39.244619	Unknown	Unknown	Yes	Single	Unclassified
132/650 Double-Circuit							
132-001	-120.183059	39.335819	70	Vertical Tangent	No	Double	Unclassified
132-002	-120.182392	39.335846	70	Vertical Tangent	No	Double	Unclassified
132-003	-120.181547	39.335881	70	Vertical Tangent	No	Double	Unclassified
132-004	-120.180796	39.335911	70	Vertical Tangent	No	Double	Unclassified
132-005	-120.179616	39.335959	75	Self-Supporting Angle	No	Double	Unclassified
132-006	-120.179499	39.335734	70	Vertical Tangent	No	Double	Unclassified
132-007	-120.179361	39.335468	75	Self-Supporting Angle	No	Double	Unclassified
132-008	-120.179365	39.334330	74.5	Vertical Tangent	Yes	Double	Unclassified
132-009	-120.179368	39.333534	70	Vertical Tangent	Yes	Double	Unclassified
132-010	-120.179370	39.333130	70	Vertical Tangent	Yes	Double	Unclassified
132-011	-120.179373	39.332311	80	Self-Supporting Angle	Yes (Double)	Double	Unclassified
132-012	-120.178270	39.332354	74.5	Vertical Tangent	Yes	Double	Unclassified
132-013	-120.177211	39.332395	65.5	Vertical Tangent	Yes	Double	Unclassified

Pole Number	Longitude (decimal degrees)	Latitude (decimal degrees)	Pole Height (feet)	Pole Type	Distribution Underbuild? (Yes/No)	Circuit Type	Jurisdiction
132-014	-120.176174	39.332436	70	Vertical Tangent	Yes	Double	Unclassified
132-015	-120.175519	39.332461	74.5	Vertical Tangent	Yes	Double	Unclassified
132-016	-120.174460	39.332558	74.5	Vertical Tangent	Yes	Double	Unclassified
132-017	-120.173394	39.332655	65.5	Vertical Tangent	Yes	Double	Unclassified
132-018	-120.172346	39.332751	74.5	Vertical Tangent	Yes	Double	Unclassified
132-019	-120.171288	39.332847	70	Vertical Tangent	Yes	Double	Unclassified
132-020	-120.170204	39.332946	80	Self-Supporting Angle	Yes	Double	Unclassified
132-021	-120.170218	39.332029	79	Vertical Tangent	Yes	Double	Unclassified
132-022	-120.170230	39.331157	79	Vertical Tangent	Yes	Double	Unclassified
132-023	-120.170238	39.330608	79	Vertical Tangent	Yes	Double	Unclassified
132-024	-120.170253	39.329576	74.5	Vertical Tangent	Yes	Double	Unclassified
132-025	-120.170249	39.328880	70	Vertical Tangent	Yes	Double	Unclassified
132-026	-120.170246	39.328231	65.5	Vertical Tangent	Yes	Double	Unclassified
132-027	-120.170258	39.327461	65.5	Vertical Tangent	Yes	Double	Unclassified
132-028	-120.170270	39.326658	65.5	Vertical Tangent	Yes	Double	Unclassified
132-029	-120.170283	39.325843	74.5	Vertical Tangent	Yes	Double	Unclassified
132-030	-120.170296	39.325075	79	Vertical Tangent	Yes	Double	Unclassified
132-031	-120.170307	39.324337	70	Vertical Tangent	Yes	Double	Unclassified
132-032	-120.170316	39.323756	75	Self-Supporting Angle	Yes	Double	Unclassified
Northstar Fold							
NSF-001	-120.105003	39.284365	66	Vertical Tangent	Yes	Double	Unclassified
NSF-002	-120.105820	39.284276	66	Self-Supporting Angle	Yes	Double	Unclassified
NSF-003	-120.106337	39.283823	66	Vertical Tangent	Yes	Double	Unclassified
NSF-004	-120.107010	39.283235	66	Vertical Tangent	Yes	Double	Unclassified
NSF-005	-120.107674	39.282655	66	Vertical Tangent	Yes	Double	Unclassified
NSF-006	-120.108197	39.282198	66	Vertical Tangent	Yes	Double	Unclassified
NSF-007	-120.108783	39.281686	66	Self-Supporting Angle	Yes	Double	Unclassified
NSF-008	-120.109744	39.281570	66	Vertical Tangent	Yes	Double	Unclassified
NSF-009	-120.110729	39.281451	66	Vertical Tangent	Yes	Double	Unclassified
NSF-010	-120.111548	39.281352	66	Self-Supporting Angle	Yes	Double	Unclassified

Pole Number	Longitude (decimal degrees)	Latitude (decimal degrees)	Pole Height (feet)	Pole Type	Distribution Underbuild? (Yes/No)	Circuit Type	Jurisdiction
NSF-011	-120.112057	39.280977	52	Triangle Tangent	Yes	Double	Unclassified

ATTACHMENT 3-C: TRANSMISSION POLE TYPICAL DRAWINGS

CONSTRUCTION NOTES

1. DIMENSION 'A' TO BE 4' FOR MEDIUM LOADING AND 5' FOR HEAVY LOADING CONDITIONS FOR SPANS ≤ 350'.
2. ATTACHMENT LOCATIONS FOR 6 GUYS & 2 ANCHORS IN LINE.
3. ATTACHMENT LOCATION FOR 4 GUYS & 2 ANCHORS IN LINE.
4. FOR SPANS GREATER THAN 350' CONTACT PROJECT ENGINEER.
5. IF A DOWN GUY ATTACHMENT IS TO BE BONDED, A GUY STRAIN INSULATOR MUST BE USED.
6. ALL HARDWARE TO BE BONDED, WITH A LOOP PROVIDED IN THE BONDING WIRE TO EASE ATTACHMENT OF GROUND.

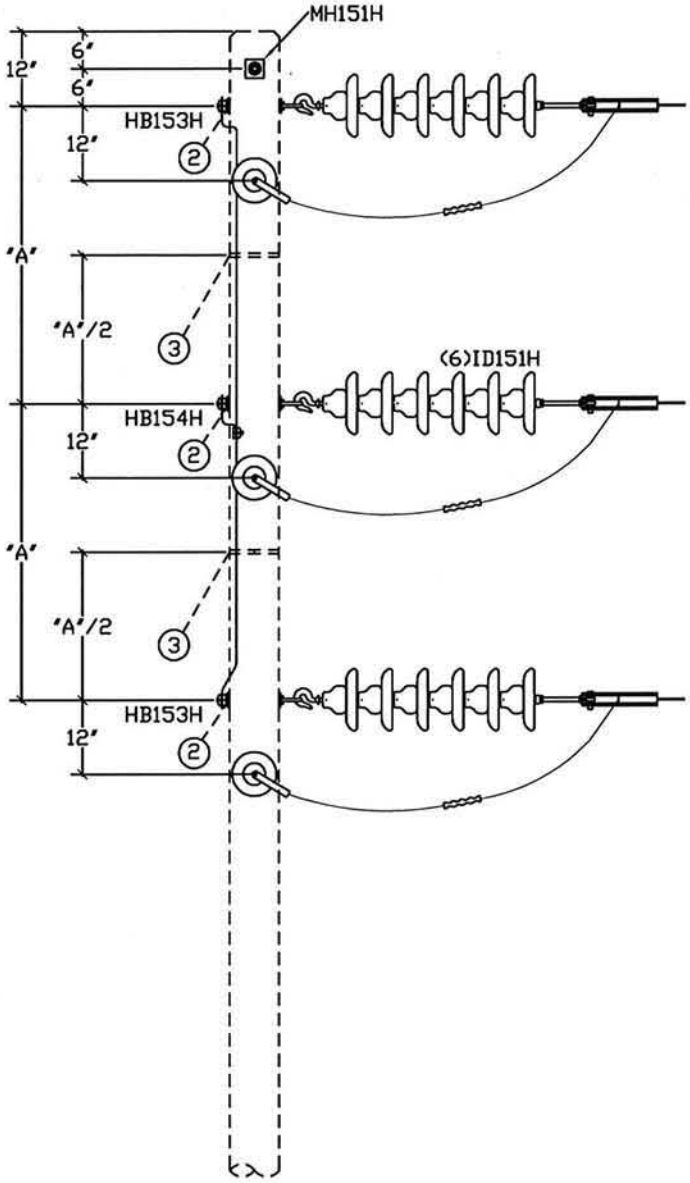

SIDE ELEVATION

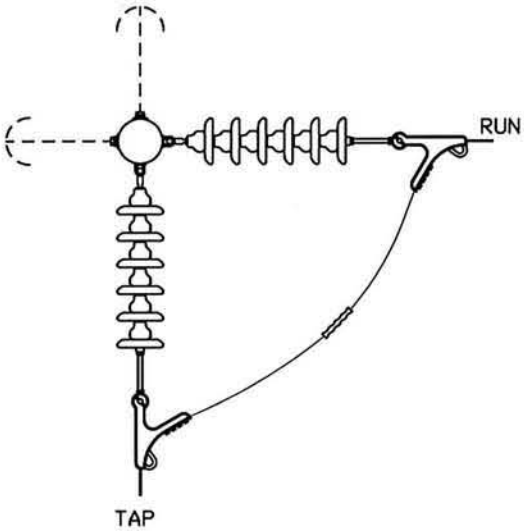

TOP VIEW

Sierra Pacific™

Existing 60-kV Typical Dead-End Angle Structure

CONSTRUCTION NOTES

1. DIMENSION 'A' TO BE 4' FOR MEDIUM LOADING AND 5' FOR HEAVY LOADING CONDITIONS FOR SPANS ≤ 350'.
2. ATTACHMENT LOCATIONS FOR 6 GUYS & 2 ANCHORS IN LINE.
3. ATTACHMENT LOCATION FOR 4 GUYS & 2 ANCHORS IN LINE.
4. FOR SPANS GREATER THAN 350' CONTACT PROJECT ENGINEER.
5. IF A DOWN GUY ATTACHMENT IS TO BE BONDED, A GUY STRAIN INSULATOR MUST BE USED.
6. ALL HARDWARE TO BE BONDED, WITH A LOOP PROVIDED IN THE BONDING WIRE TO EASE ATTACHMENT OF GROUND.

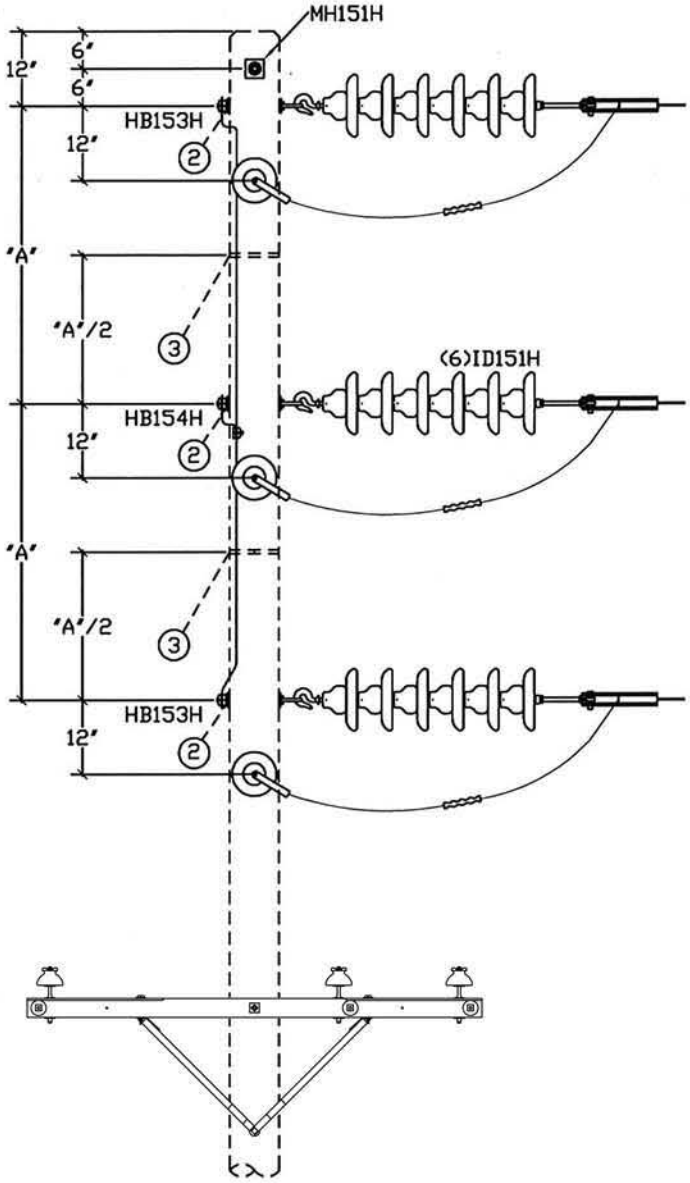

SIDE ELEVATION

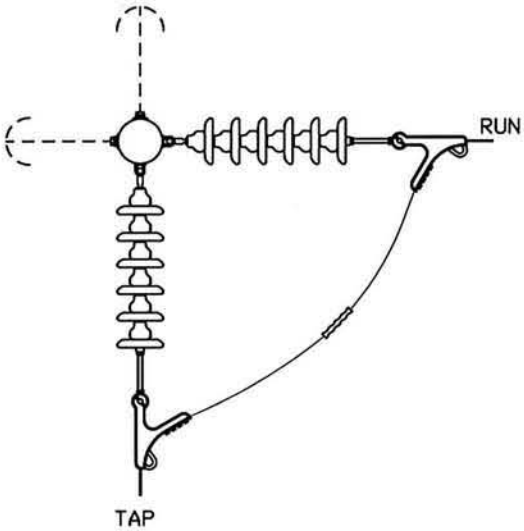

TOP VIEW

Sierra Pacific™

Existing 60-kV Typical Dead-End Angle Pole with Collocated Infrastructure

CONSTRUCTION NOTES

1. DIMENSION 'A' TO BE 3' FOR SPANS ≤ 350'. FOR SPANS GREATER THAN 350' CONTACT PROJECT ENGINEER.
2. ALL HARDWARE TO BE BONDED. USE THE BONDING LUG IF PROVIDED TO BOND STAND-OFF & POLE TOP BRACKETS. PROVIDE A LOOP IN THE BONDING WIRE TO EASE ATTACHMENT OF GROUND.

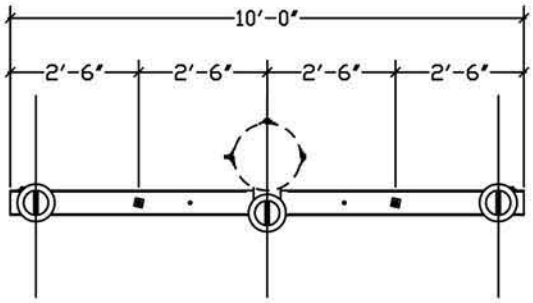

TOP VIEW

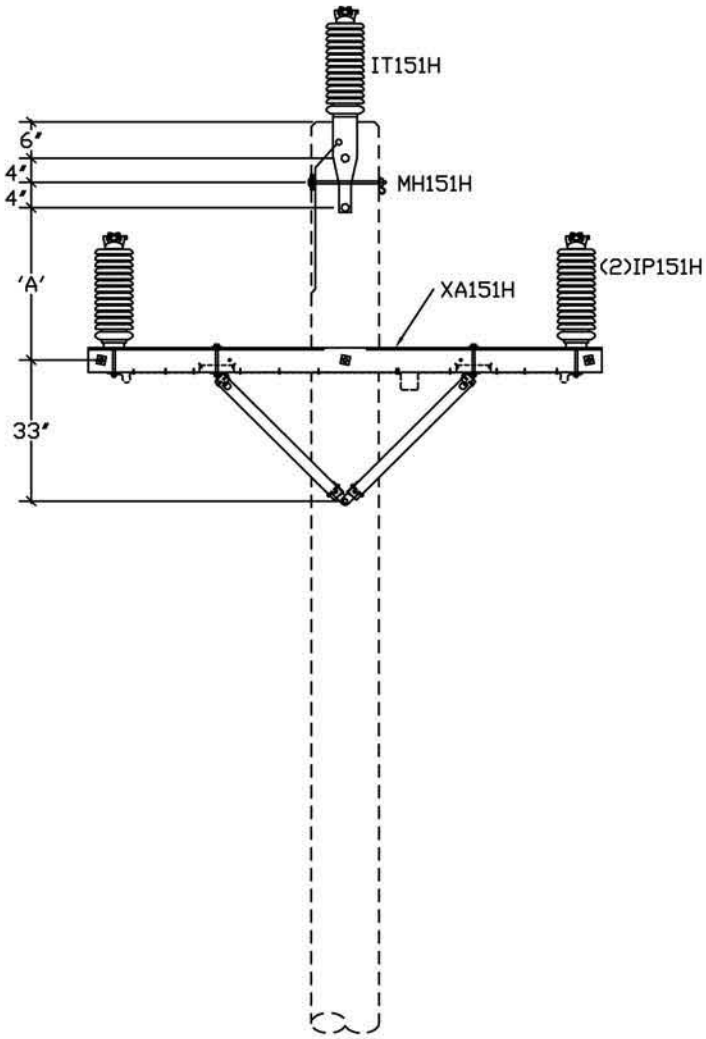

FRONT ELEVATION

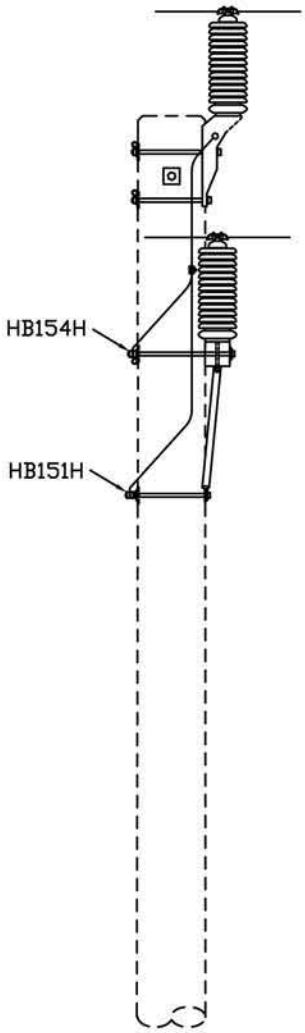

SIDE ELEVATION

Sierra Pacific™

Existing 60-kV Typical Tangent Structure

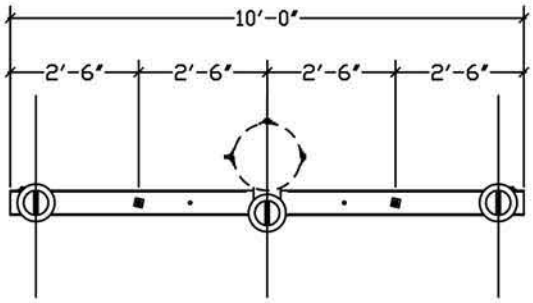

TOP VIEW

CONSTRUCTION NOTES

1. DIMENSION 'A' TO BE 3' FOR SPANS ≤ 350'. FOR SPANS GREATER THAN 350' CONTACT PROJECT ENGINEER.
2. ALL HARDWARE TO BE BONDED. USE THE BONDING LUG IF PROVIDED TO BOND STAND-OFF & POLE TOP BRACKETS. PROVIDE A LOOP IN THE BONDING WIRE TO EASE ATTACHMENT OF GROUND.

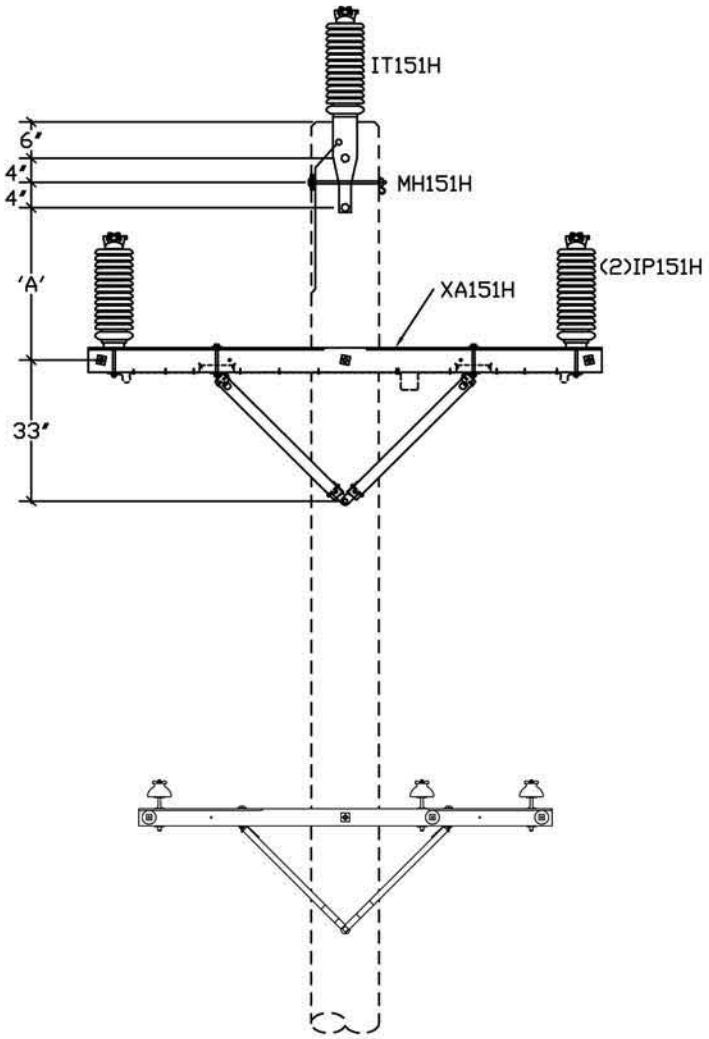

FRONT ELEVATION

Sierra Pacific™

Existing 60-kV Typical Tangent Pole with Collocated Infrastructure

CONSTRUCTION NOTES

① ALL CALIFORNIA STRUCTURES (750 V. & ABOVE) REQUIRE HIGH VOLTAGE SIGNS 40" MAX. FROM TOP OF SIGN TO LOWEST PRIMARY CONDUCTOR. REFER TO G.O. 95 RULE 51.6A.

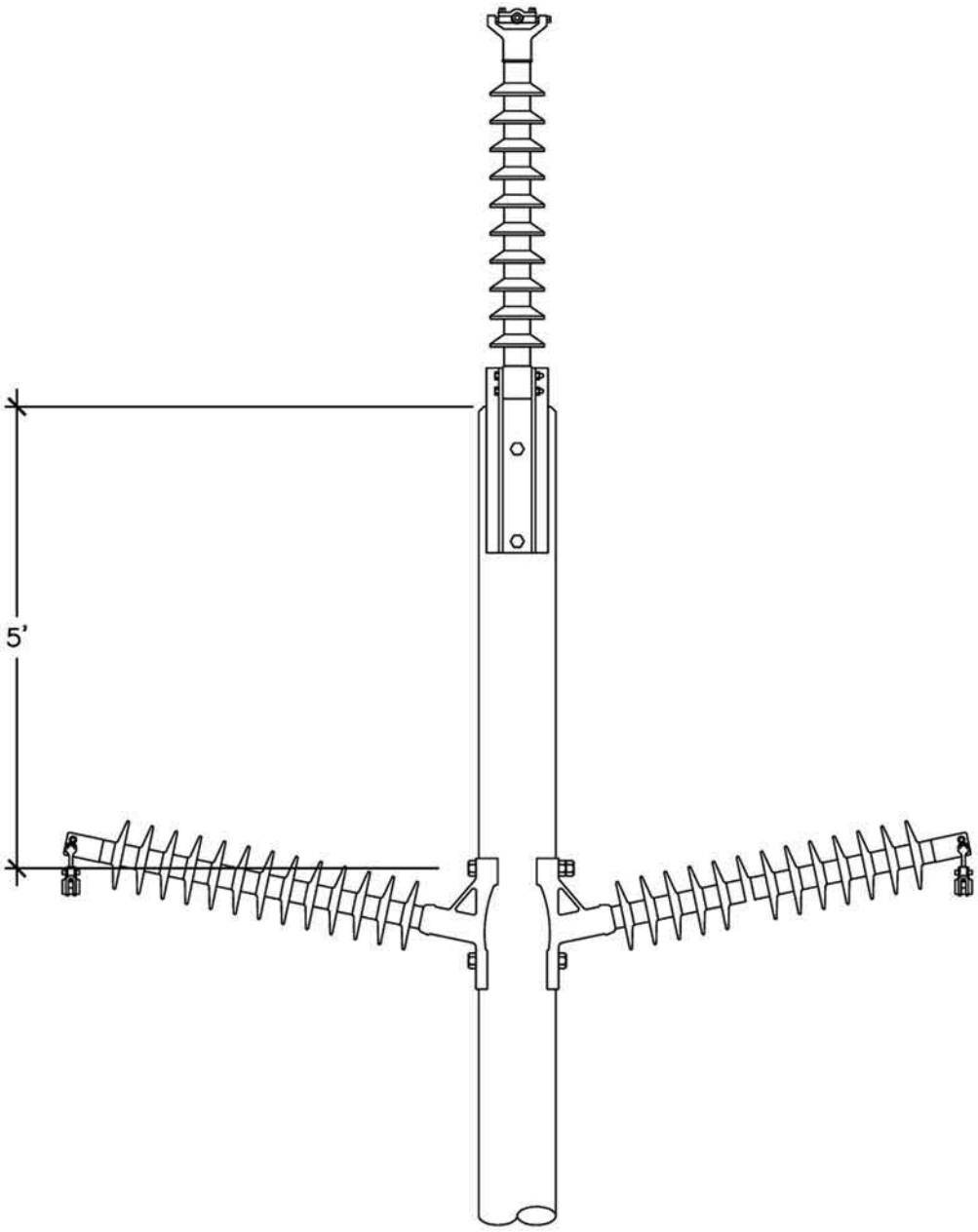

ELEVATION

Sierra Pacific™

Proposed 120-kV Typical Tangent Structure

CONSTRUCTION NOTES

1. ALL CALIFORNIA STRUCTURES (750 V. & ABOVE) REQUIRE HIGH VOLTAGE SIGNS 40" MAX. FROM TOP OF SIGN TO LOWEST PRIMARY CONDUCTOR. REFER TO G.O. 95 RULE 51.6A.

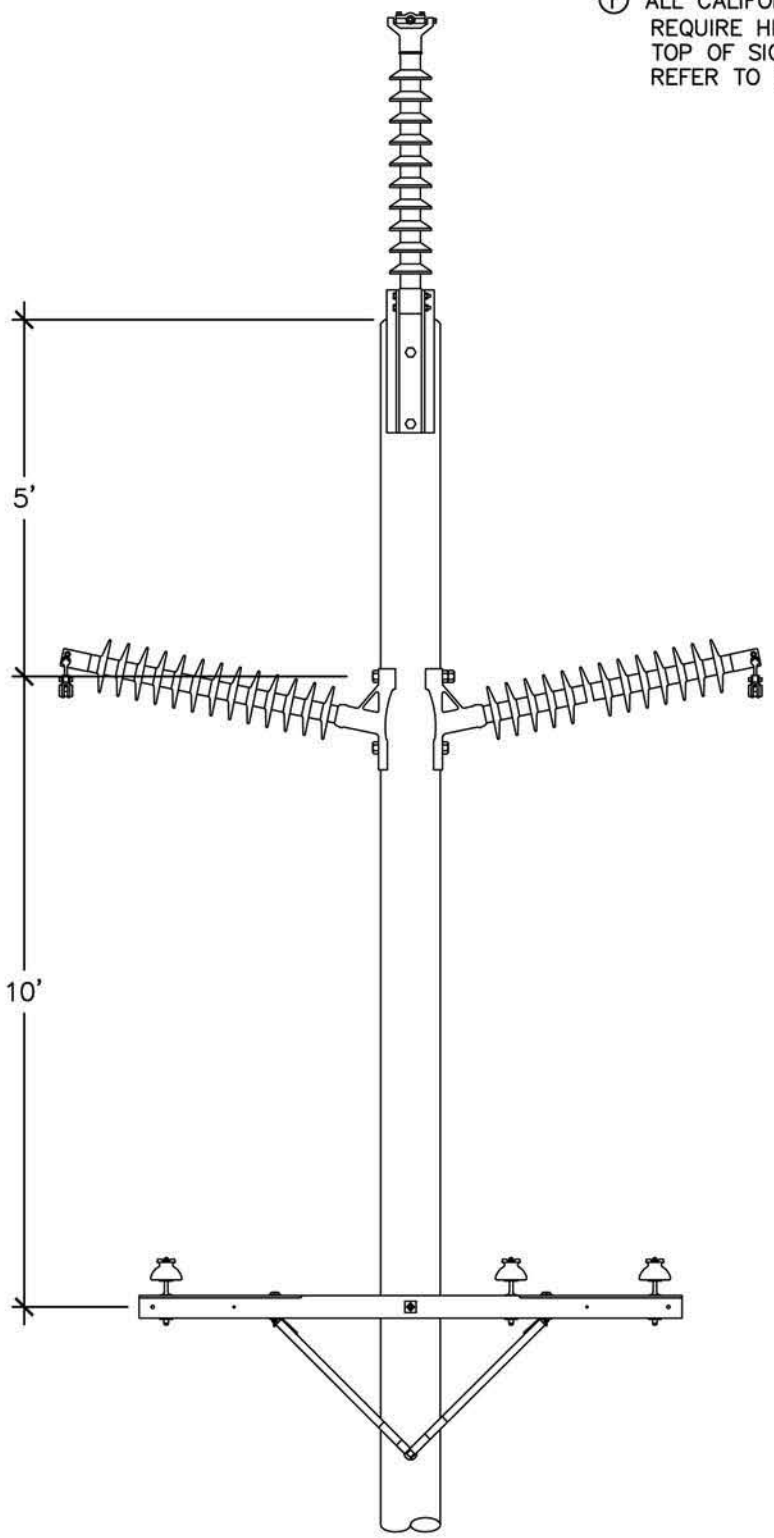

ELEVATION

Sierra Pacific™

Proposed 120-kV Typical Tangent Pole with Collocated Infrastructure

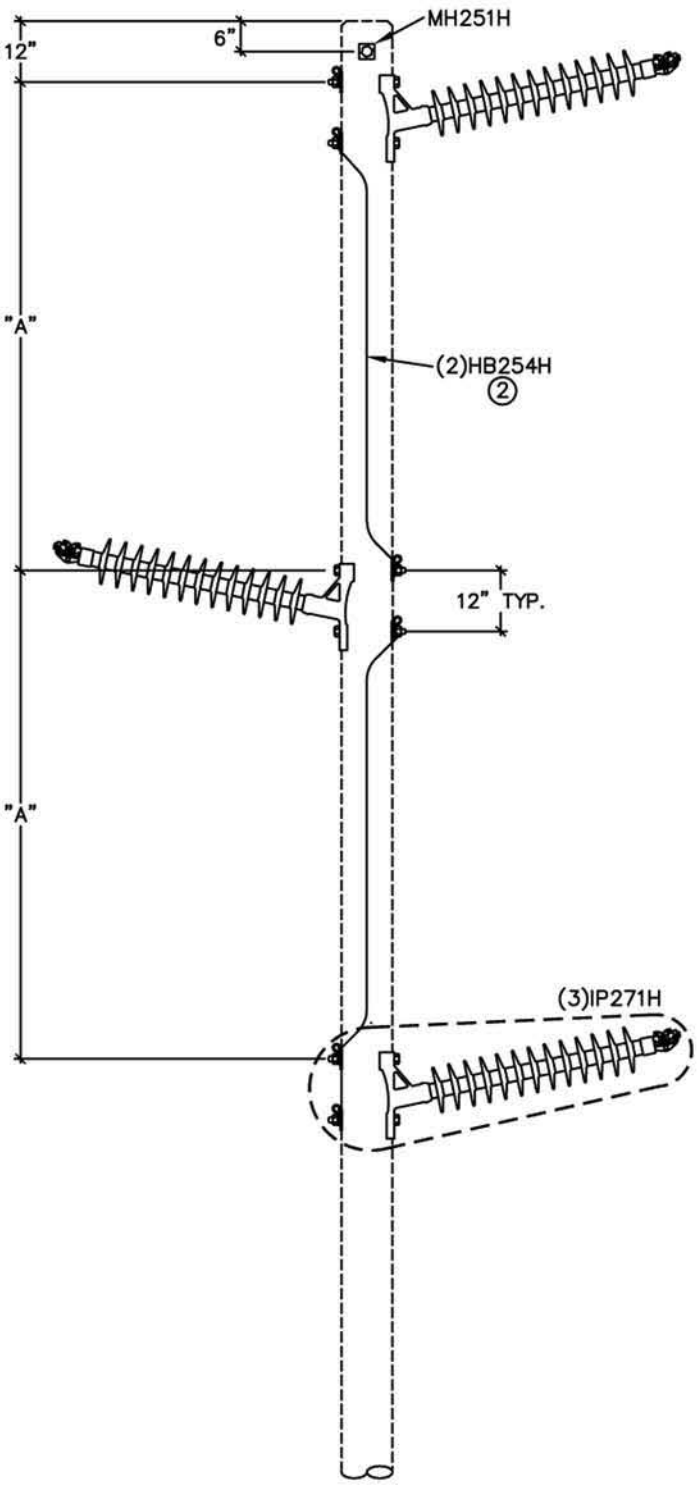

ELEVATION

CONSTRUCTION NOTES

① DIMENSION "A" TO BE SPECIFIED BY ENGINEER. NORMAL DIMENSIONS ARE 7' & 9' FOR MEDIUM & HEAVY LOADING CONDITIONS RESPECTIVELY.

② ALL HARDWARE TO BE BONDED.

③ ALL CALIFORNIA WOOD POLE STRUCTURES (750 V. & ABOVE) REQUIRE HIGH VOLTAGE SIGNS 40" MAX. FROM TOP OF SIGN TO LOWEST PRIMARY CONDUCTOR. REFER TO G.O. 95 RULE 51.6A.

Sierra Pacific™

Proposed 120-kV Typical Staggered Structure

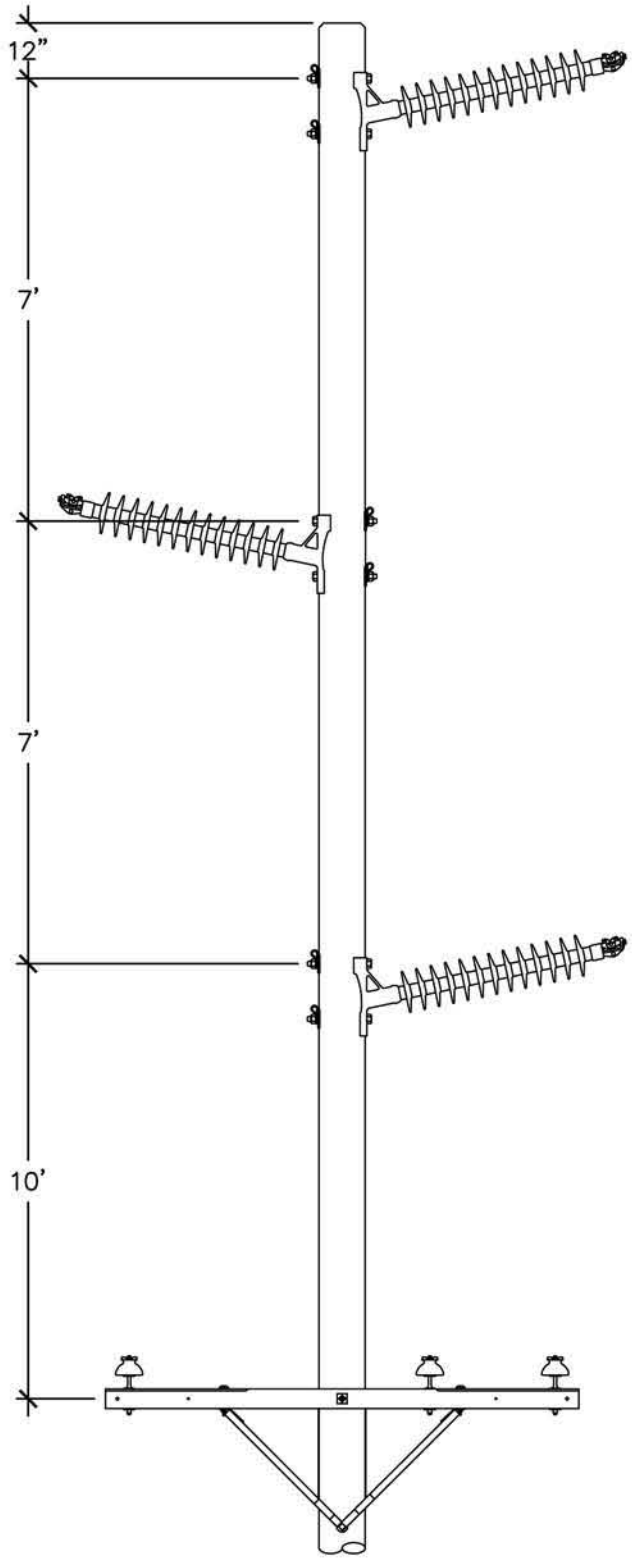

ELEVATION

CONSTRUCTION NOTES

1. ALL CALIFORNIA STRUCTURES (750 V. & ABOVE) REQUIRE HIGH VOLTAGE SIGNS 40” MAX. FROM TOP OF SIGN TO LOWEST PRIMARY CONDUCTOR. REFER TO G.O. 95 RULE 51.6A.

Sierra Pacific™

Proposed 120-kV Typical Staggered Pole with Collocated Infrastructure

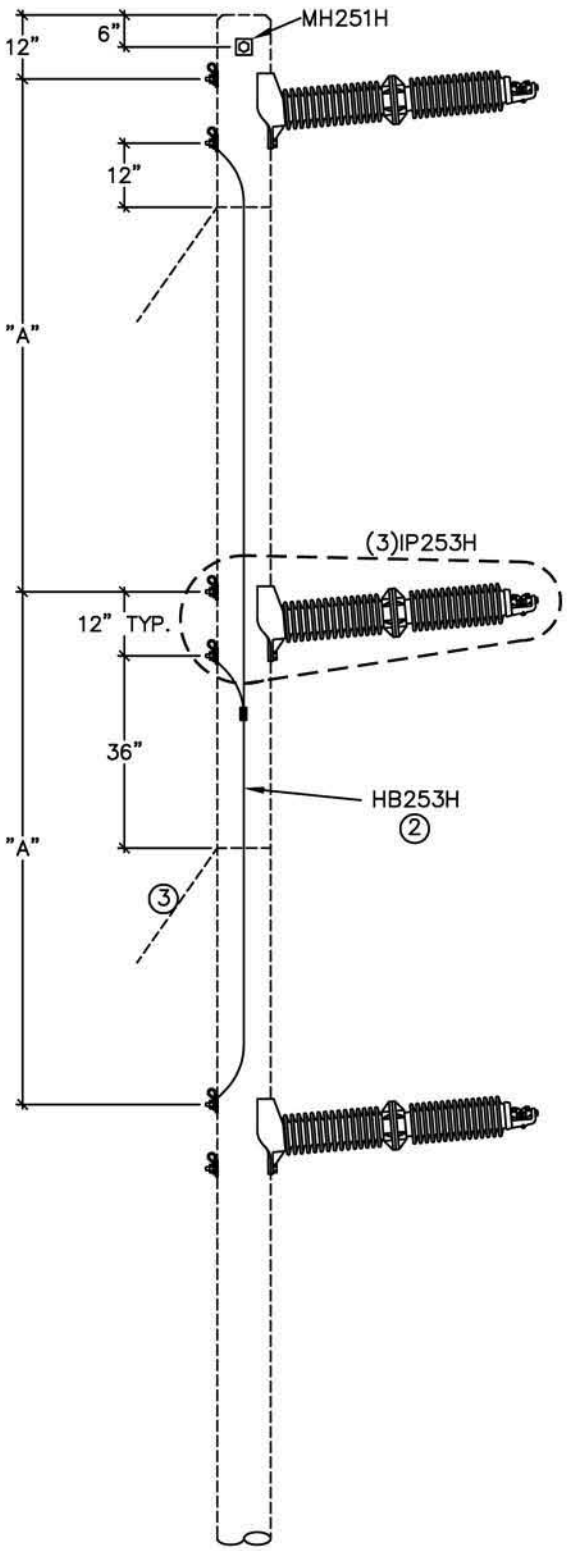

ELEVATION

CONSTRUCTION NOTES

① DIMENSION "A" TO BE SPECIFIED BY ENGINEER. NORMAL DIMENSIONS ARE 8' & 10' FOR MEDIUM & HEAVY LOADING CONDITIONS RESPECTIVELY.

② ALL HARDWARE TO BE BONDED.

③ REFER TO GY COMPATIBLE UNIT SECTION FOR APPROPRIATE GUYING MATERIALS.

④ POLE TO BE OFFSET FROM LINE C.L. REFER TO STAKING DRAWING.

⑤ CHECK CLAMP STRENGTH FOR ANGLE APPLICATION.

⑥ ALL CALIFORNIA WOOD POLE STRUCTURES (750 V. & ABOVE) REQUIRE HIGH VOLTAGE SIGNS 40" MAX. FROM TOP OF SIGN TO LOWEST PRIMARY CONDUCTOR. REFER TO G.O. 95 RULE 51.6A.

Sierra Pacific™

Proposed 120-kV Typical Angle Structure

CONSTRUCTION NOTES

1. DIMENSION "A" TO BE SPECIFIED BY ENGINEER. NORMAL DIMENSIONS ARE 8' & 10' FOR MEDIUM & HEAVY LOADING CONDITIONS RESPECTIVELY.
2. ALL HARDWARE TO BE BONDED.
3. REFER TO GY COMPATIBLE UNIT SECTION FOR APPROPRIATE GUYING MATERIALS.
4. POLE BAND INSTALLATION INCLUDES 1-1/4" BOLT & SHEAR BLOCK.
5. ALL CALIFORNIA WOOD POLE STRUCTURES (750 V. & ABOVE) REQUIRE HIGH VOLTAGE SIGNS 40" MAX. FROM TOP OF SIGN TO LOWEST PRIMARY CONDUCTOR. REFER TO G.O. 95 RULE 51.6A.

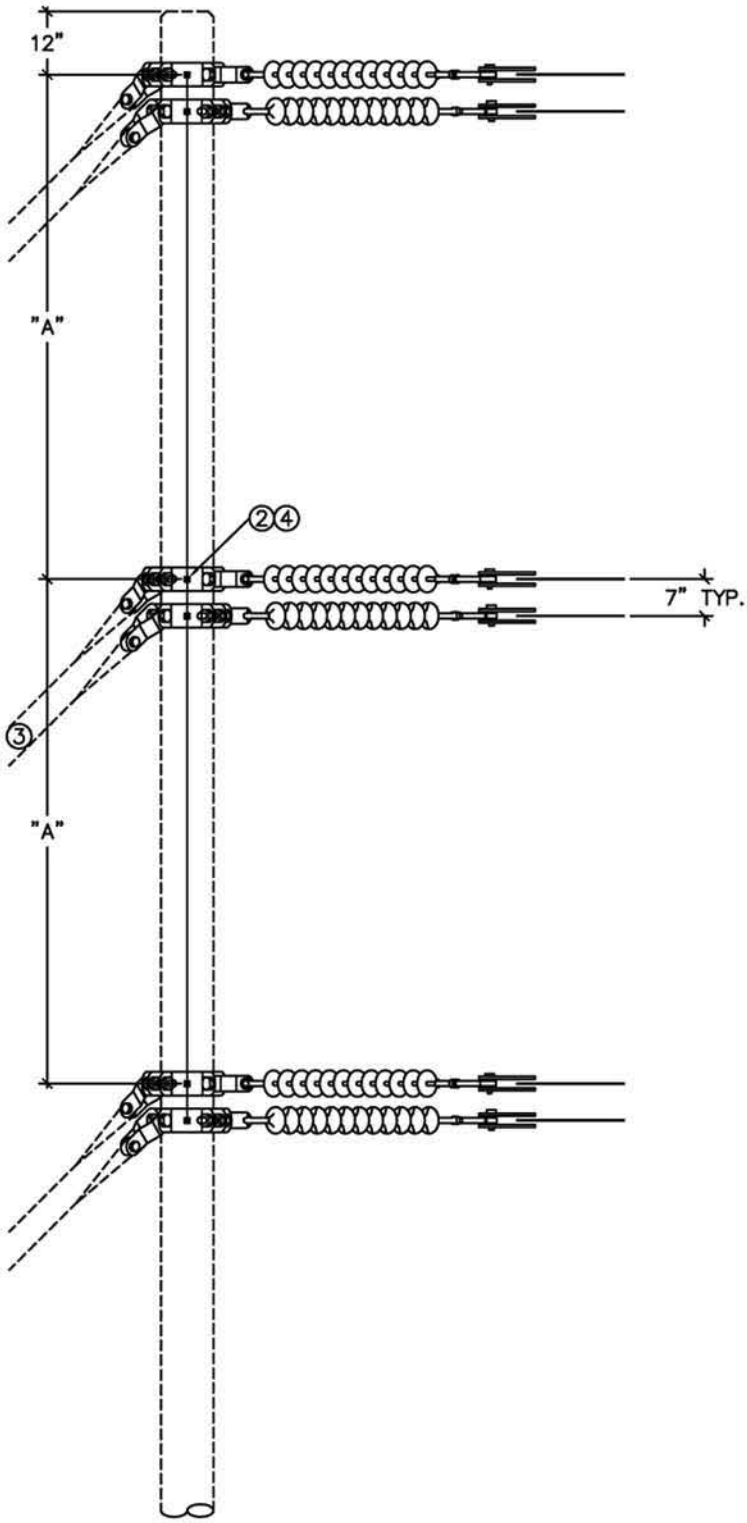

ELEVATION

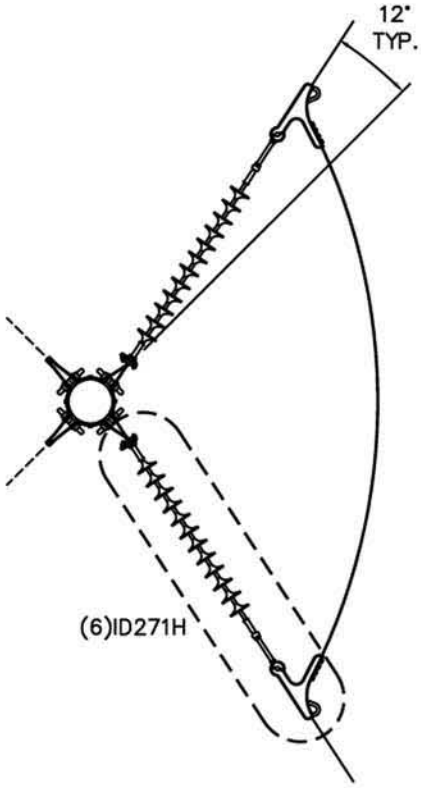

PLAN VIEW

Sierra Pacific™

Proposed 120-kV Typical Dead-End Angle Structure

CONSTRUCTION NOTES

① REFER TO GY COMPATIBLE UNIT SECTION FOR APPROPRIATE GUYING MATERIALS.

② ALL CALIFORNIA STRUCTURES (750 V. & ABOVE) REQUIRE HIGH VOLTAGE SIGNS 40" MAX. FROM TOP OF SIGN TO LOWEST PRIMARY CONDUCTOR. REFER TO G.O. 95 RULE 51.6A.

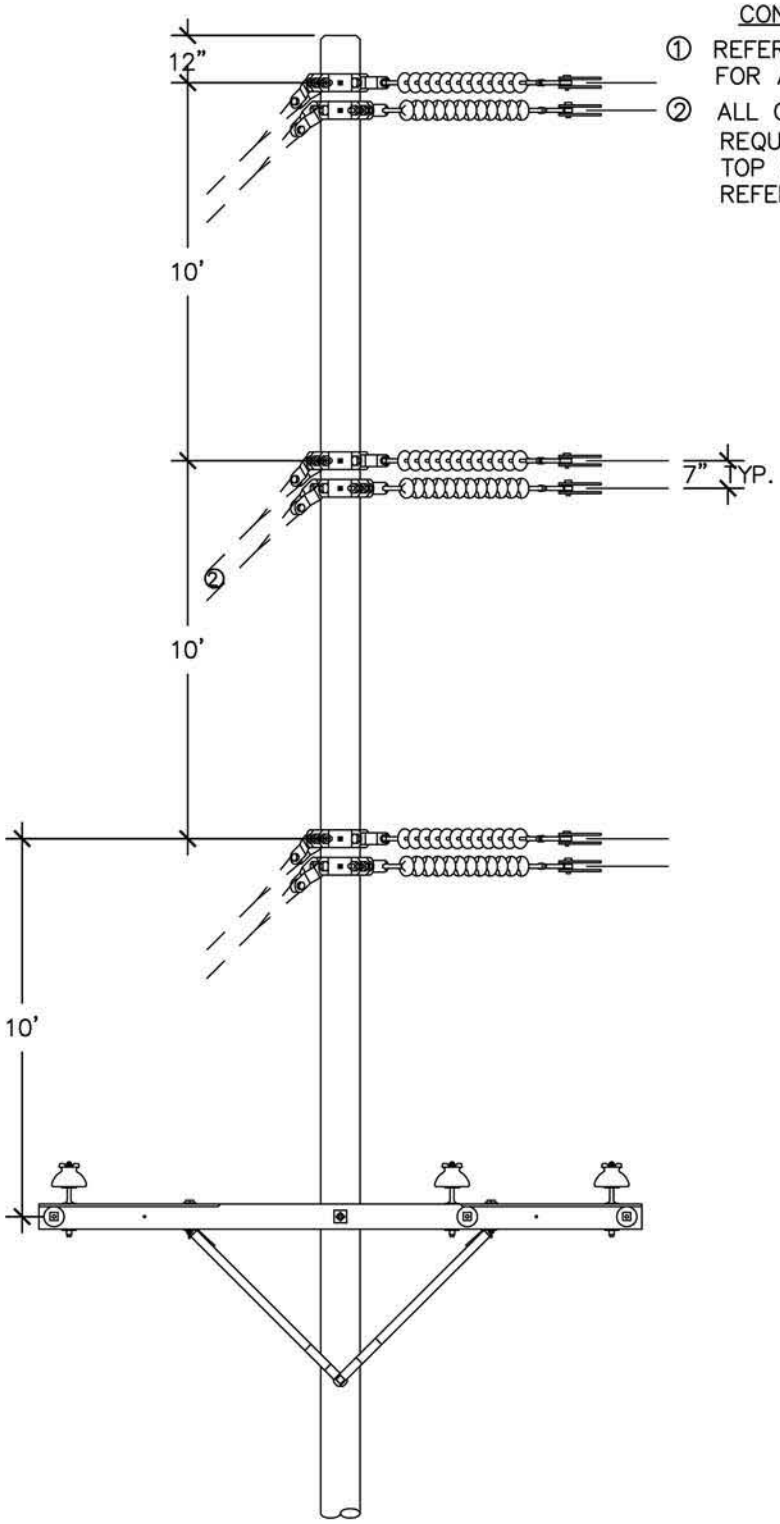

ELEVATION

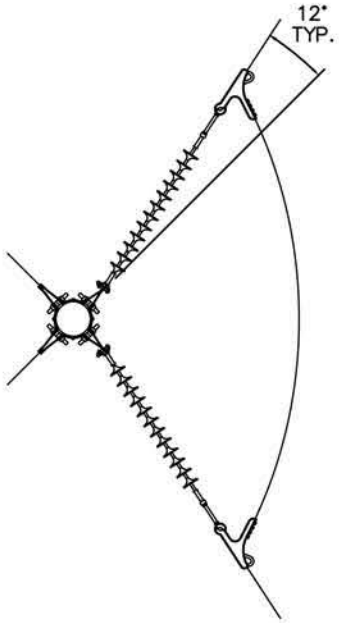

PLAN VIEW

Sierra Pacific™

Proposed 120-kV Typical Angle Pole with Collocated Infrastructure

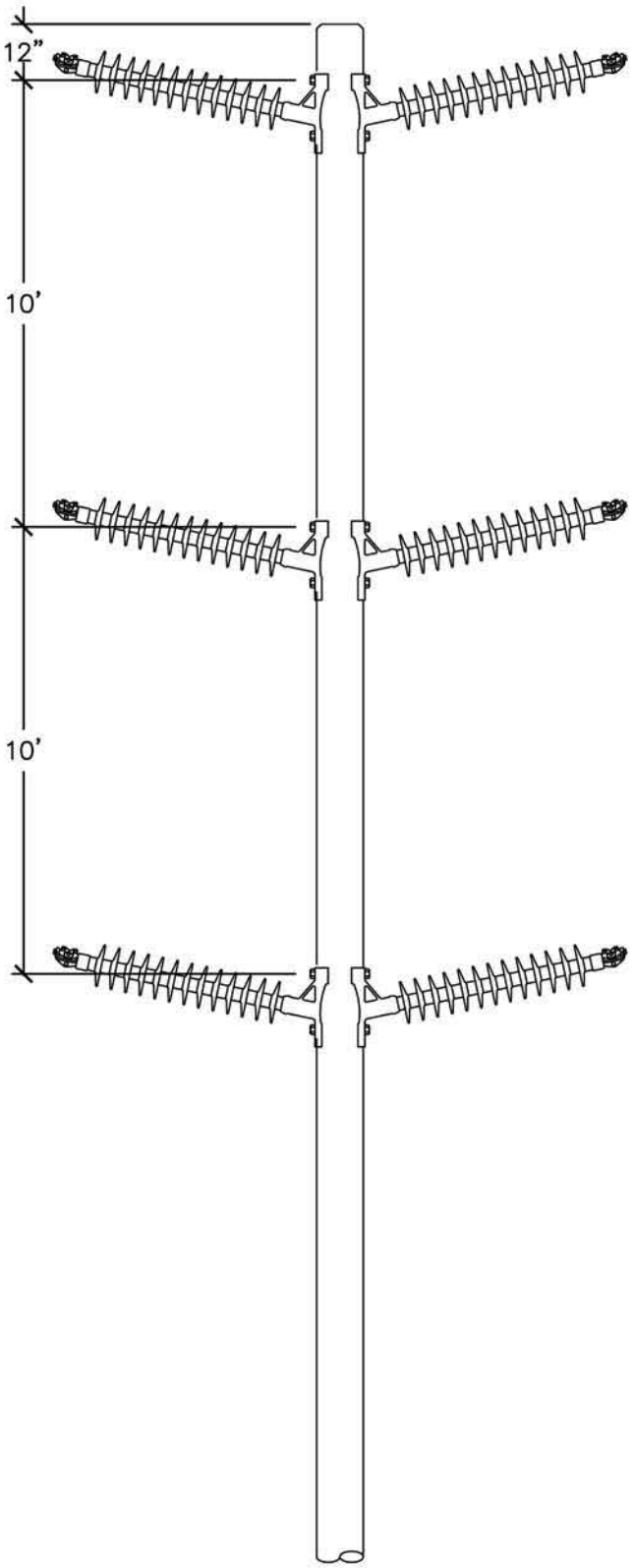

ELEVATION

CONSTRUCTION NOTES

1. ALL CALIFORNIA STRUCTURES (750 V. & ABOVE) REQUIRE HIGH VOLTAGE SIGNS 40" MAX. FROM TOP OF SIGN TO LOWEST PRIMARY CONDUCTOR. REFER TO G.O. 95 RULE 51.6A.

Sierra Pacific™

Proposed 120-kV Typical Double-Circuit Tangent Structure

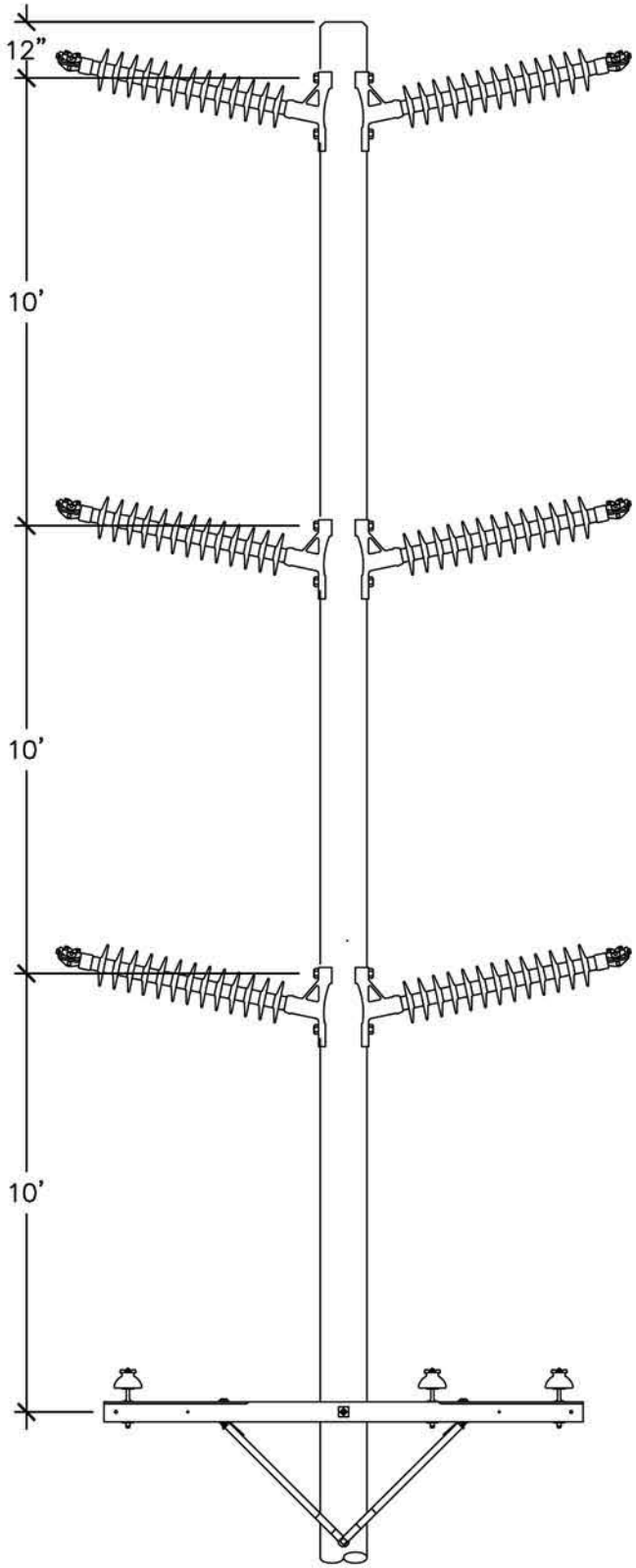

ELEVATION

CONSTRUCTION NOTES

1. ALL CALIFORNIA STRUCTURES (750 V. & ABOVE) REQUIRE HIGH VOLTAGE SIGNS 40" MAX. FROM TOP OF SIGN TO LOWEST PRIMARY CONDUCTOR. REFER TO G.O. 95 RULE 51.6A.

Sierra Pacific™

Proposed 120-kV Typical Double-Circuit Pole with Collocated Infrastructure

NOTES:

1. PROVIDE STAINLESS STEEL GROUNDING NUT.

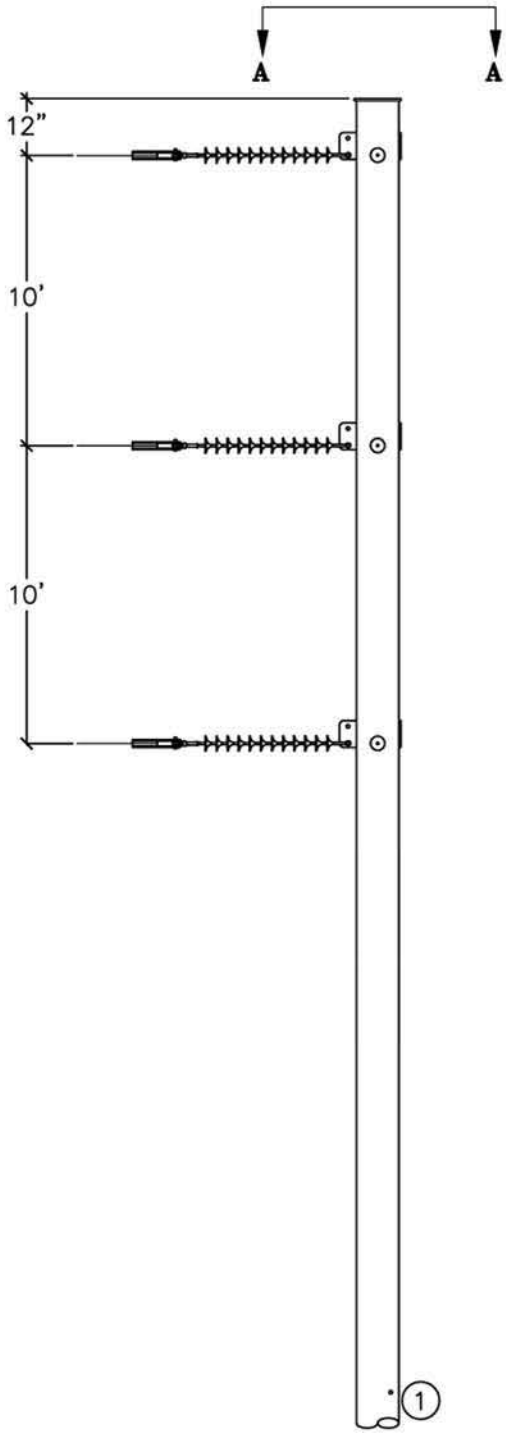

ELEVATION

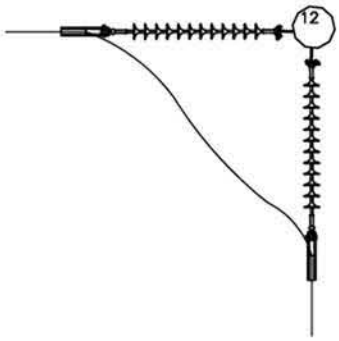

SECTION A–A

Sierra Pacific™

Proposed Typical Self-Supporting Steel Pole

NOTES:

1. PROVIDE STAINLESS STEEL GROUNDING NUT.

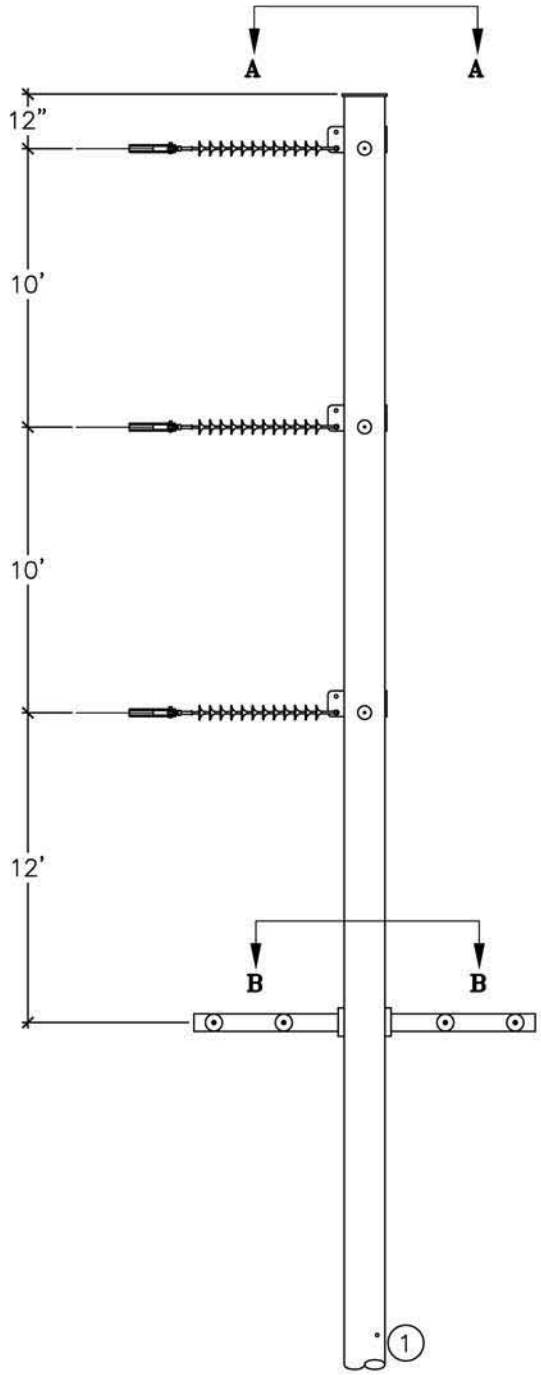

ELEVATION

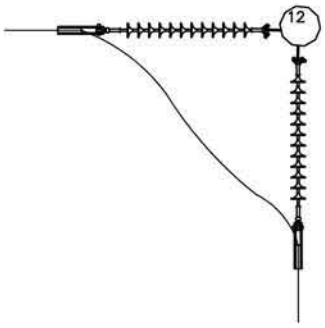

SECTION A–A

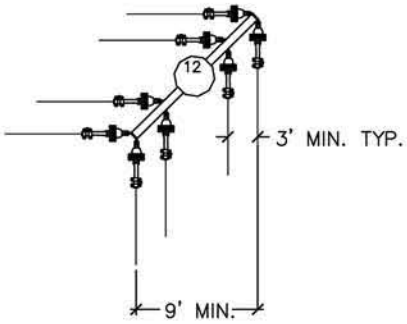

SECTION B–B

Sierra Pacific™

Proposed Typical Self-Supporting Steel Pole with Collocated Infrastructure

NOTES:

1. PROVIDE STAINLESS STEEL GROUNDING NUT.

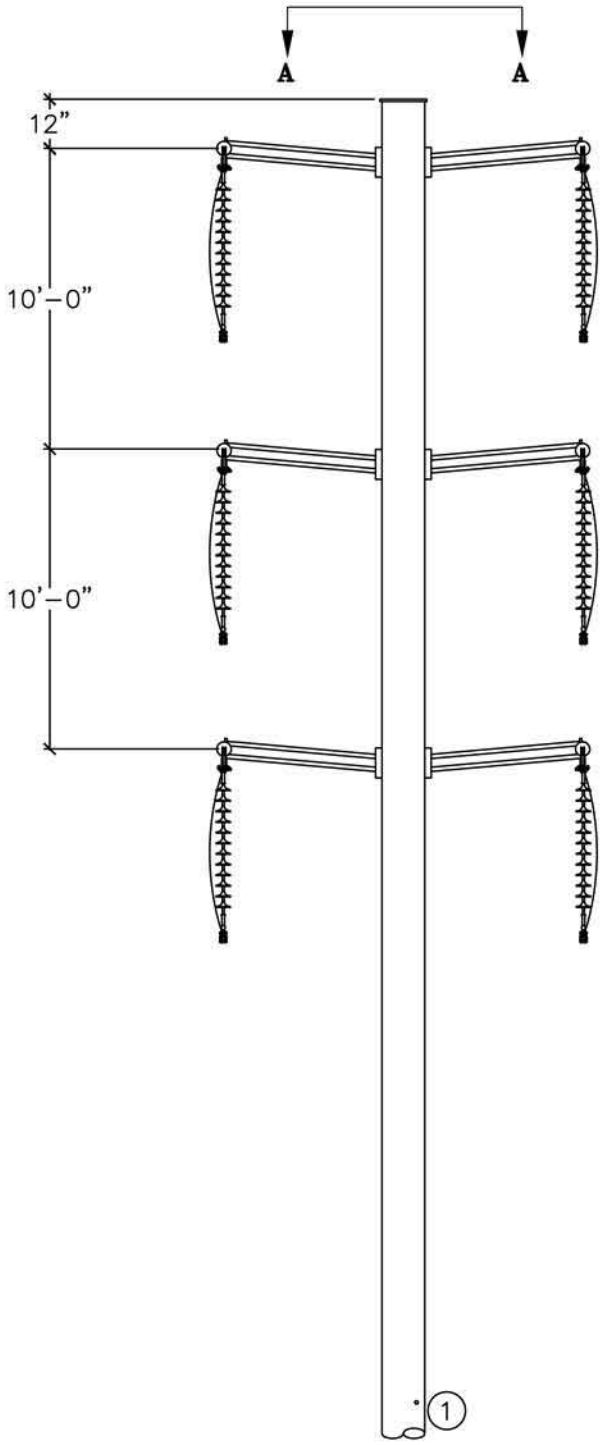

ELEVATION

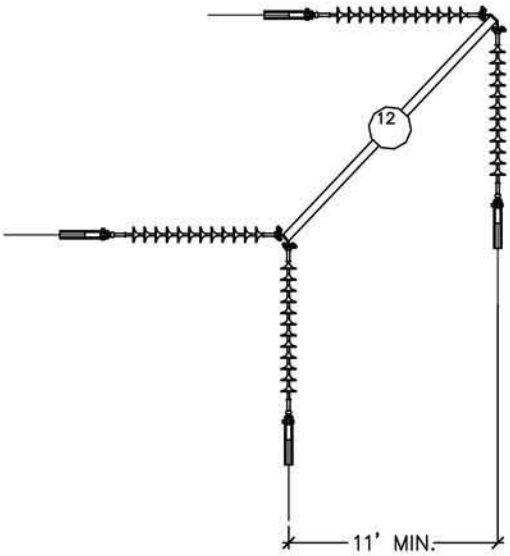

SECTION A-A

Sierra Pacific™

Proposed Typical Double-Circuit Self-Supporting Steel Pole

NOTES:

1. PROVIDE STAINLESS STEEL GROUNDING NUT.

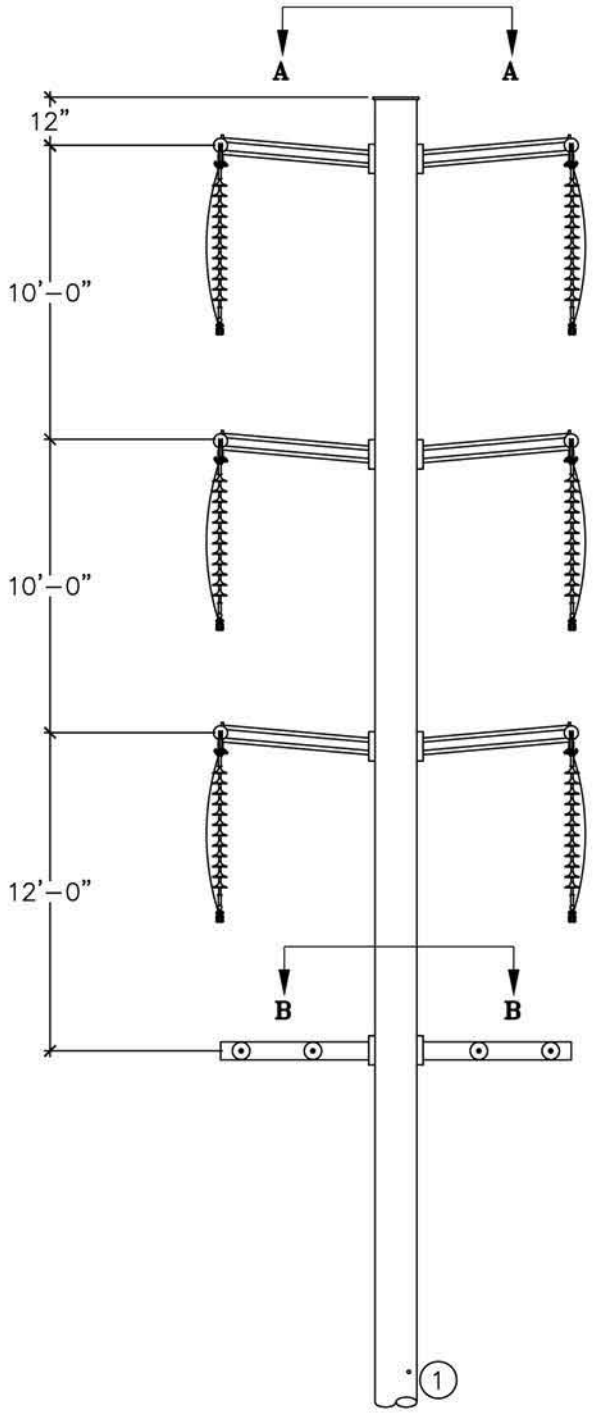

ELEVATION

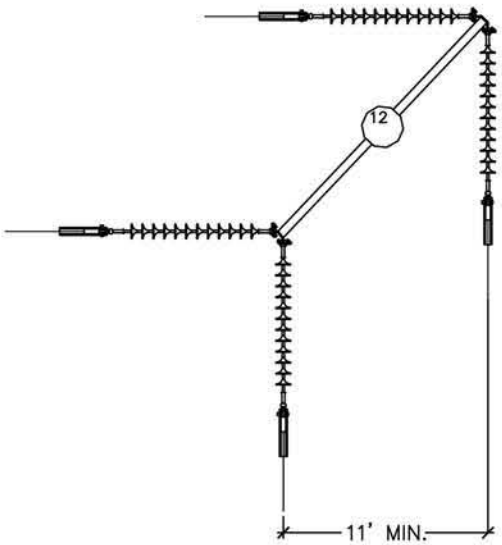

SECTION A–A

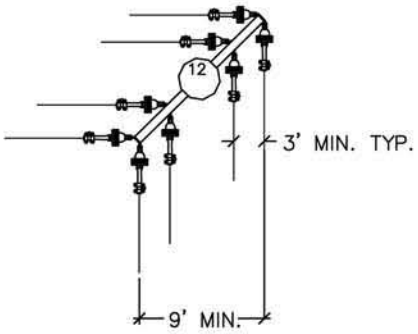

SECTION B–B

Sierra Pacific™

Proposed Typical Double-Circuit Self-Supporting Steel Pole with Collocated Infrastructure

NOTES:

1. PROVIDE STAINLESS STEEL GROUNDING NUT.
2. DRAWINGS ARE SCHEMATIC ONLY. REFER TO THOMAS AND BETTS DRAWINGS FOR POLE DETAILS.

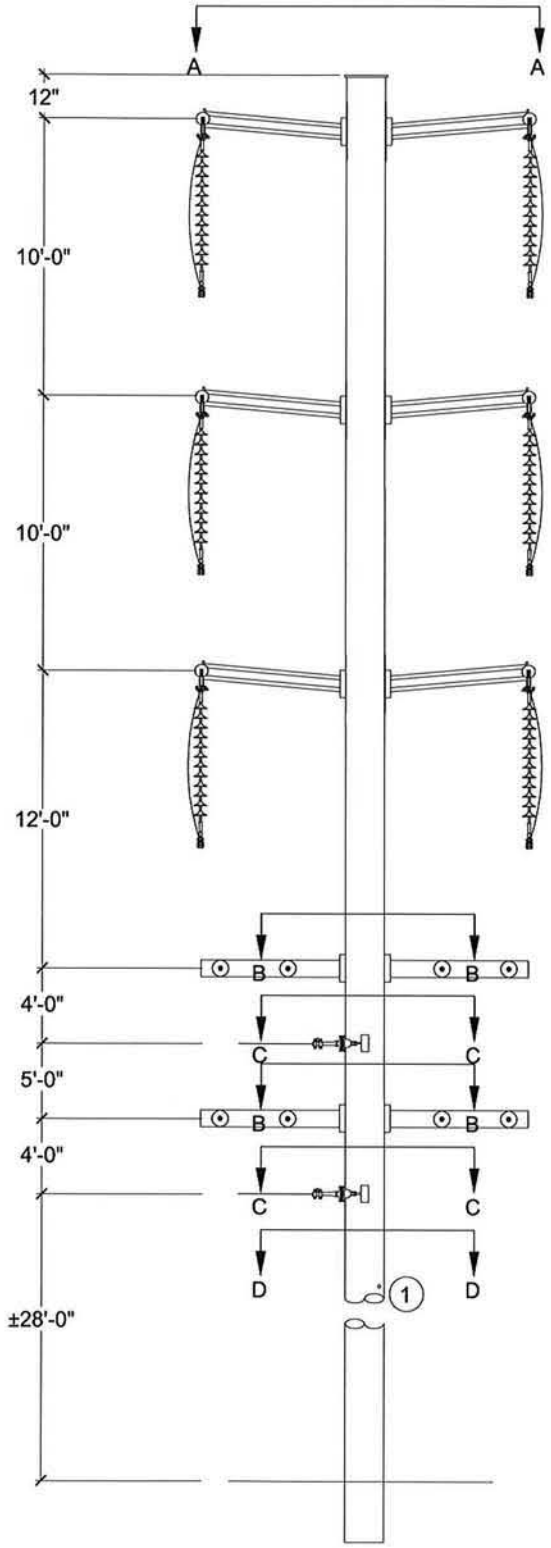

ELEVATION

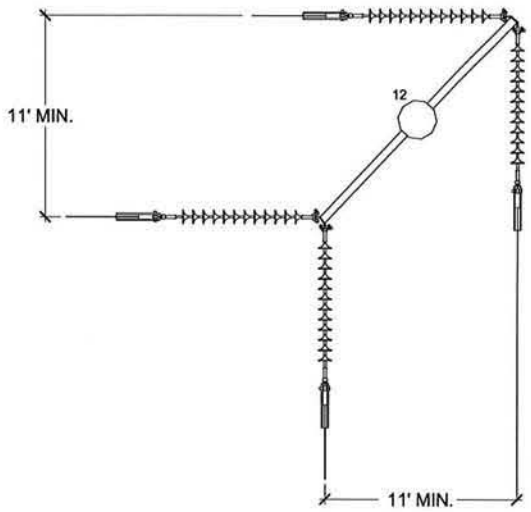

SECTION A-A

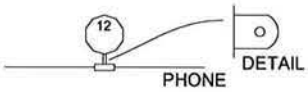

SECTION D-D

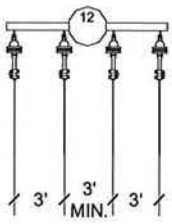

SECTION B-B

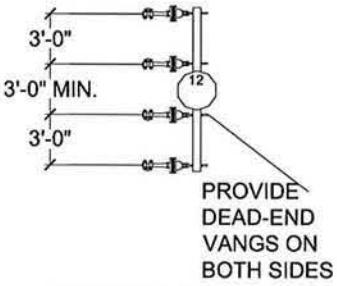

SECTION C-C

Sierra Pacific™

Proposed Typical Double-Circuit Self-Supporting Steel Pole with Double Collocated Infrastructure

ATTACHMENT 3-D: SUBSTATION PLOT PLANS AND ELEVATION DRAWINGS

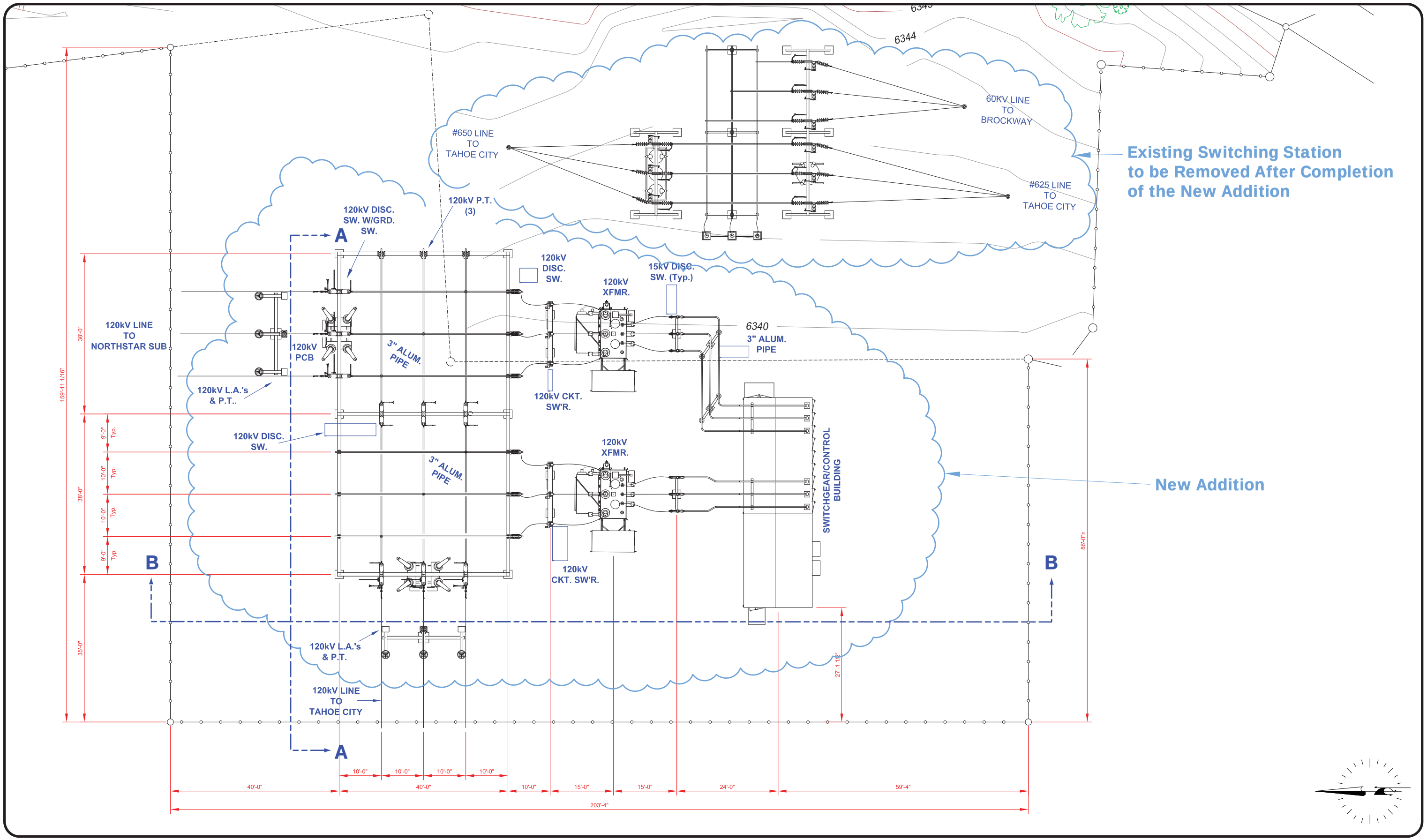

Sierra Pacific™

Kings Beach Substation Plot Plan

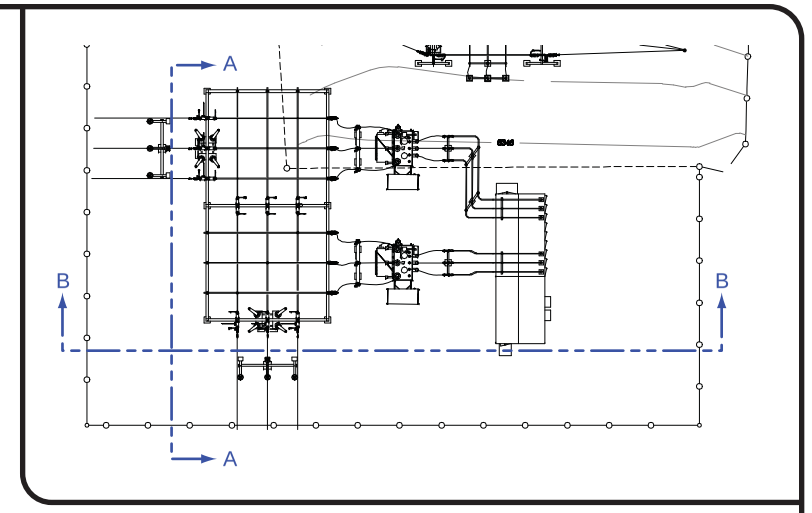

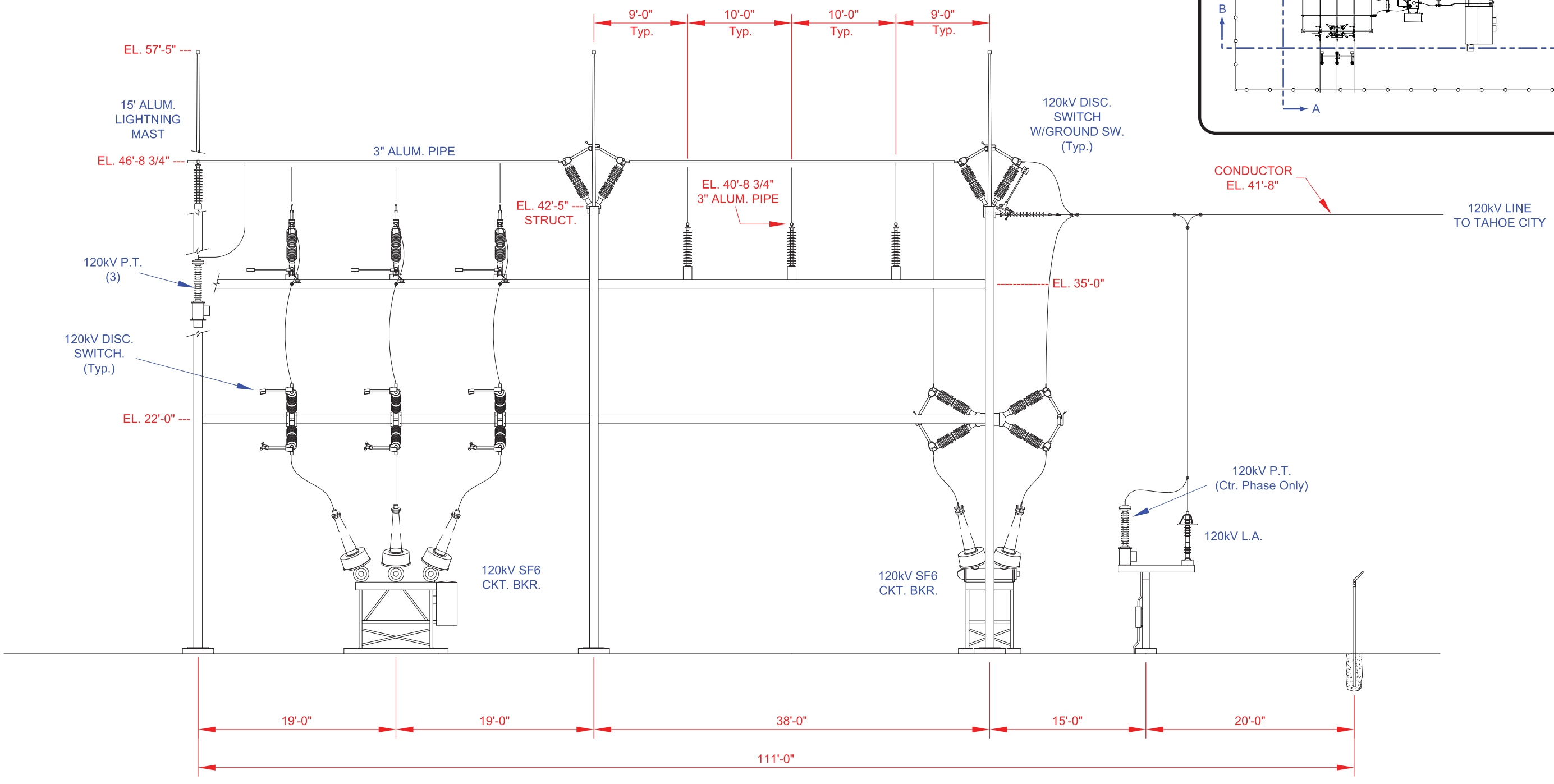

Elevation A-A

Sierra Pacific™

Kings Beach Substation Elevation A-A

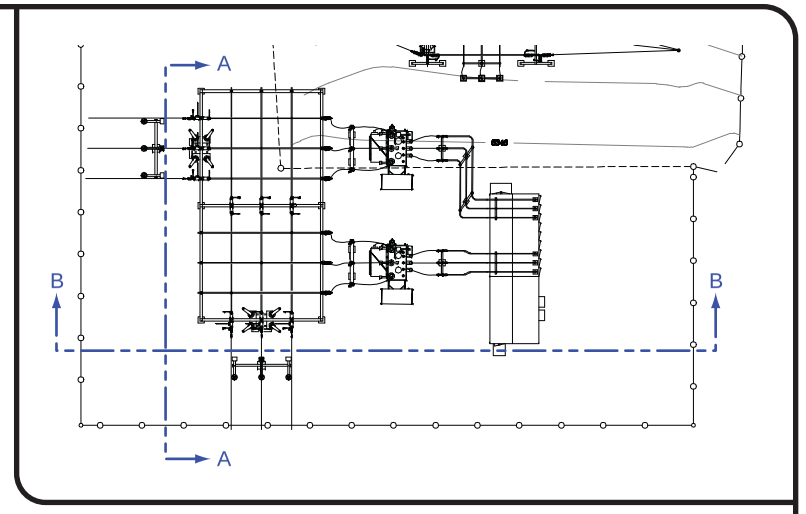

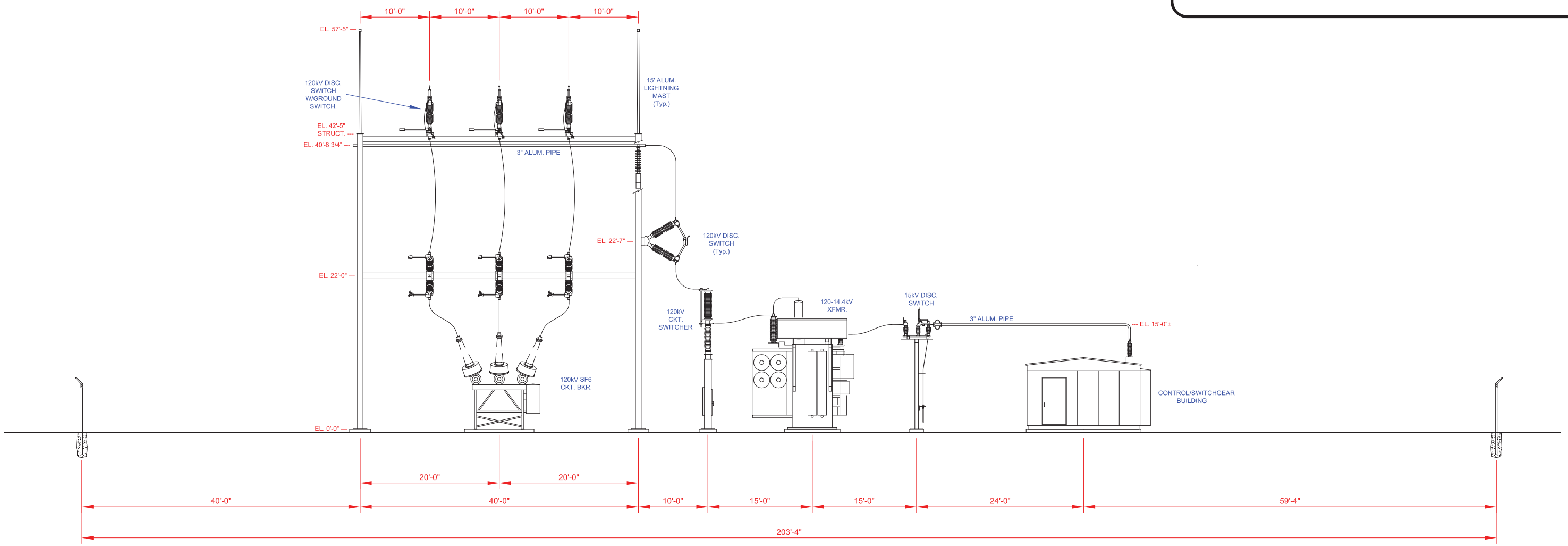

Elevation B-B

Sierra Pacific™

Kings Beach Substation Elevation B-B

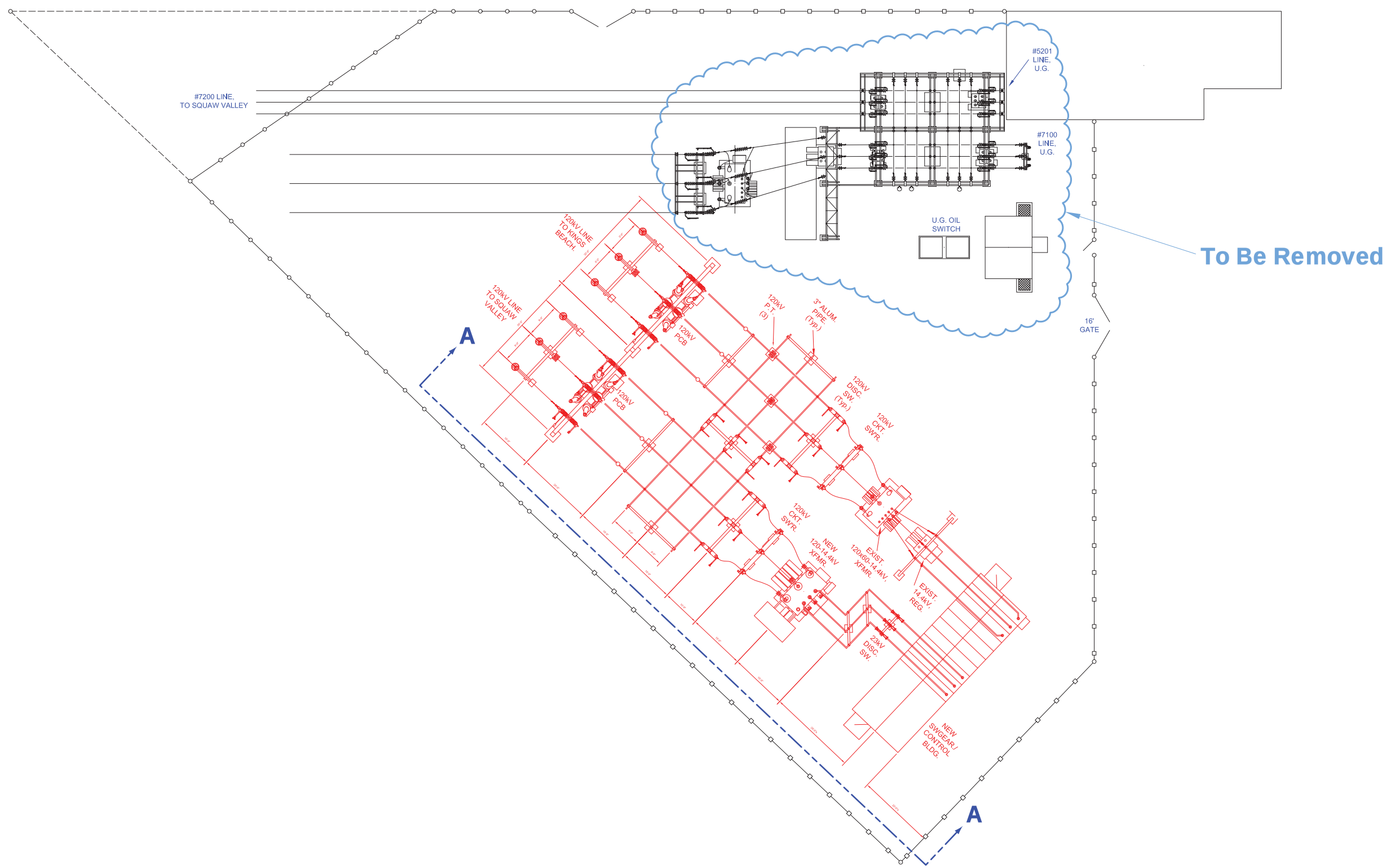

Sierra Pacific™

Tahoe City Substation Plot Plan

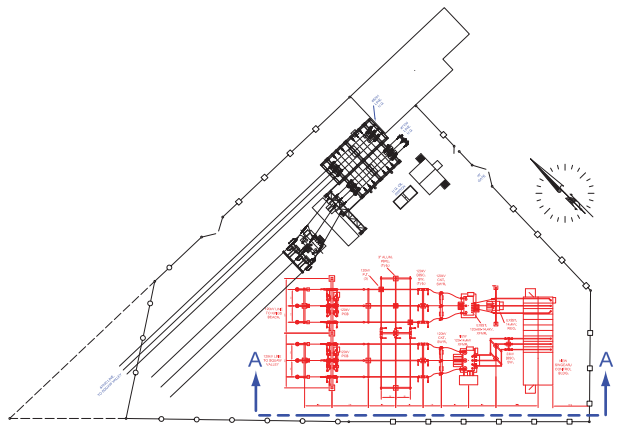

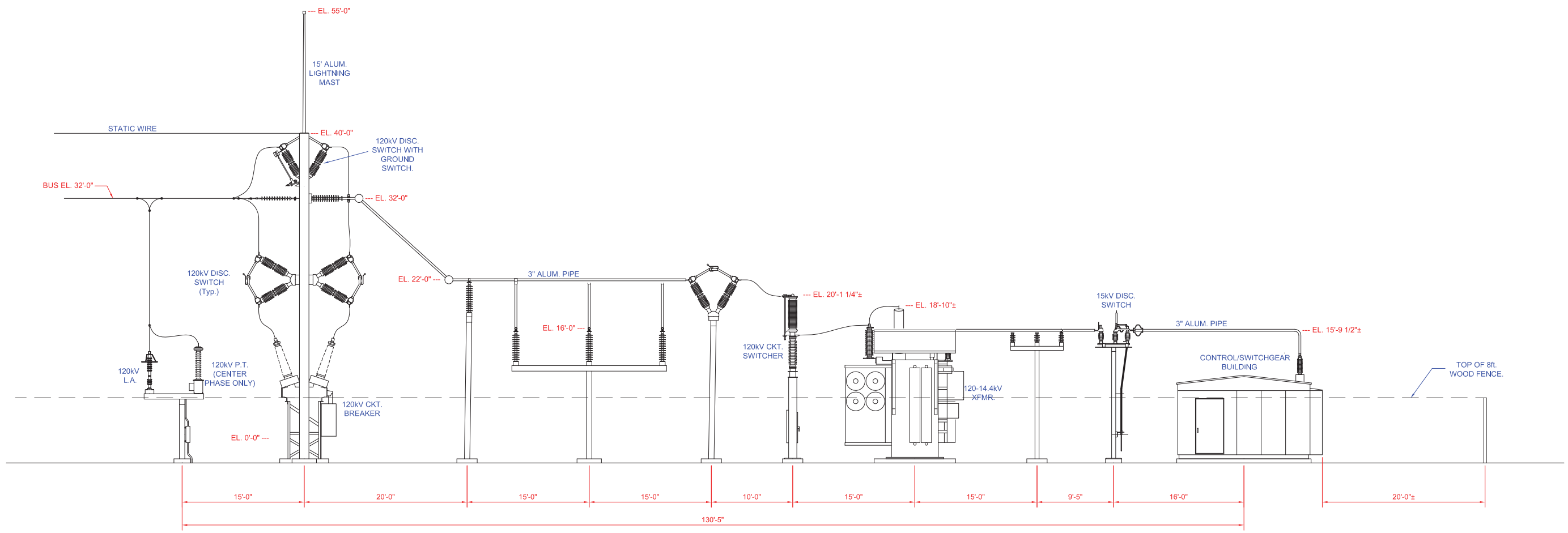

Elevation A-A

Sierra Pacific™

Tahoe City Substation Elevation A-A

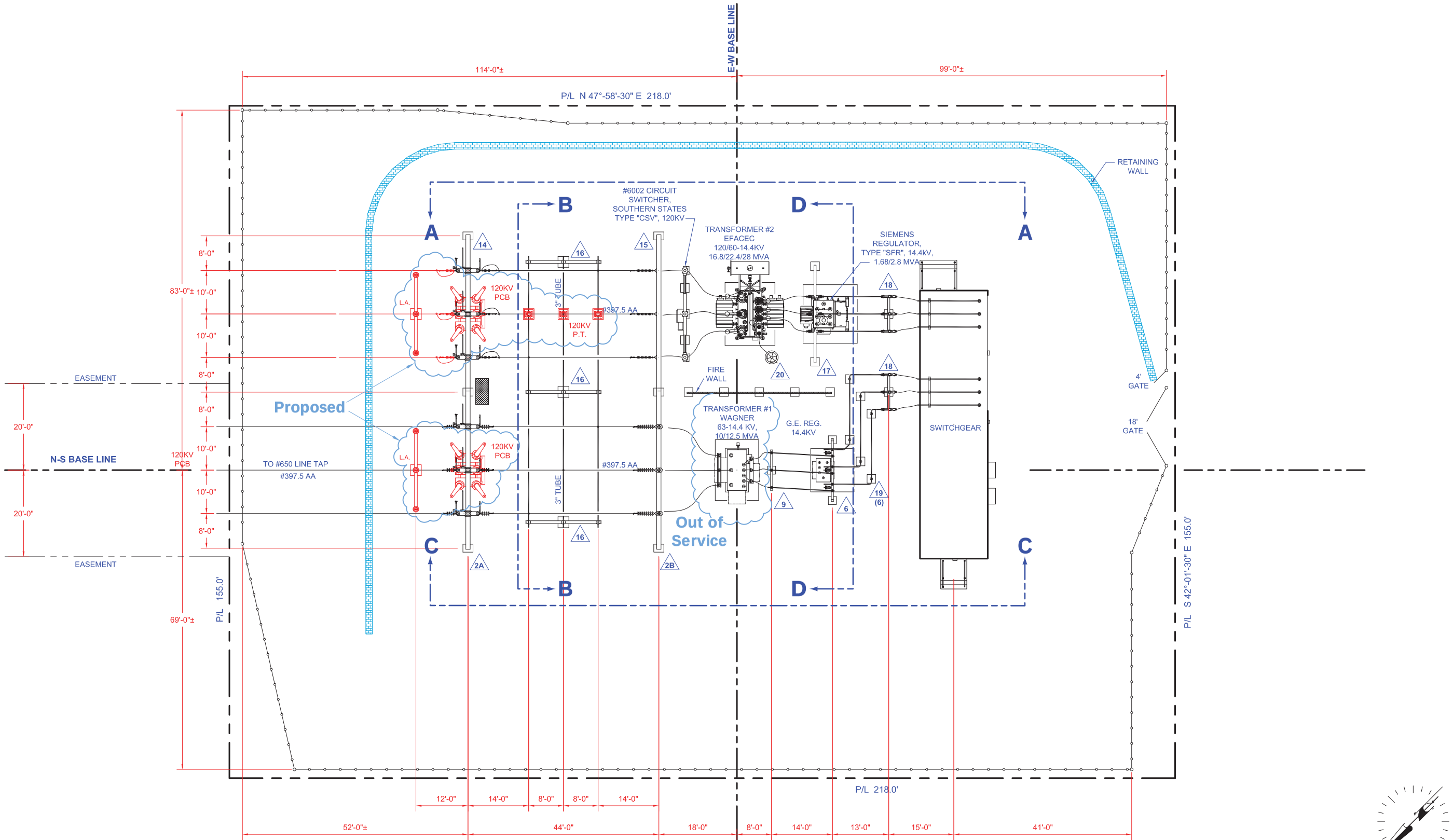

Sierra Pacific™

Northstar Substation Plot Plan

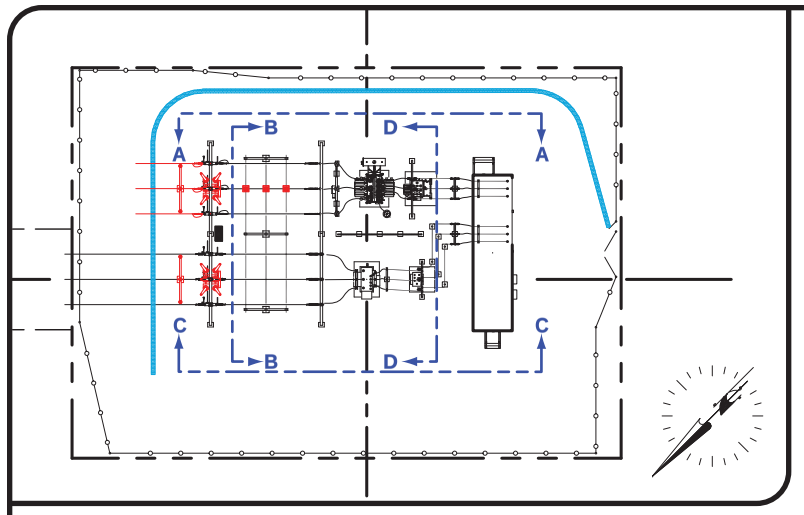

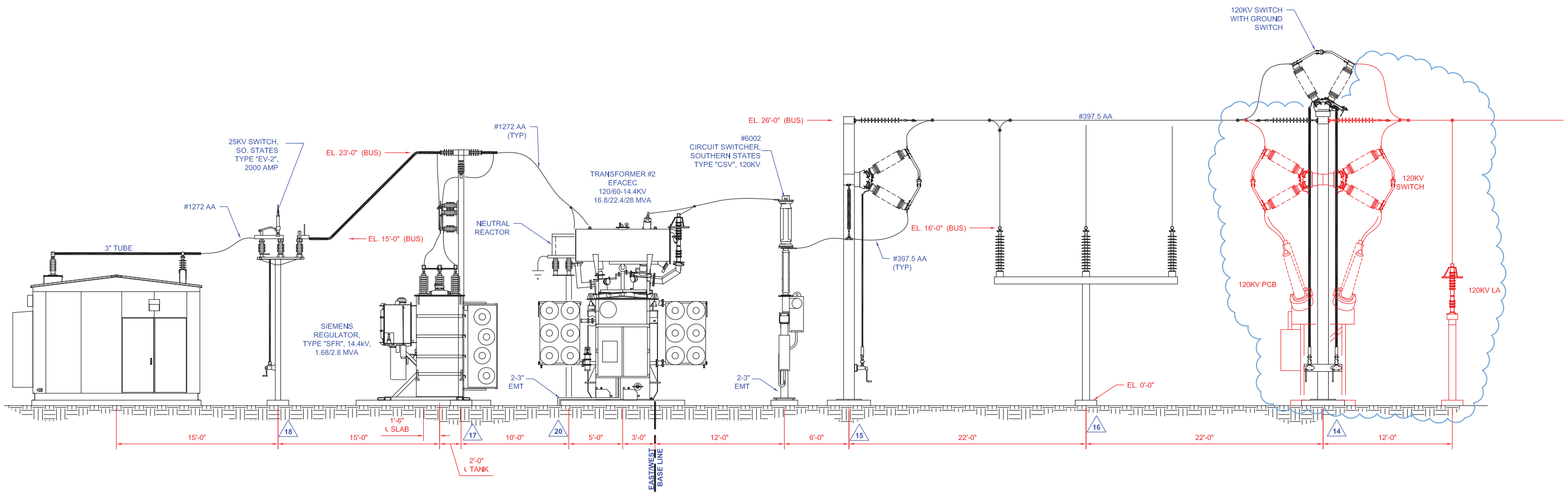

Elevation A-A

Sierra Pacific™

Northstar Substation Elevation A-A

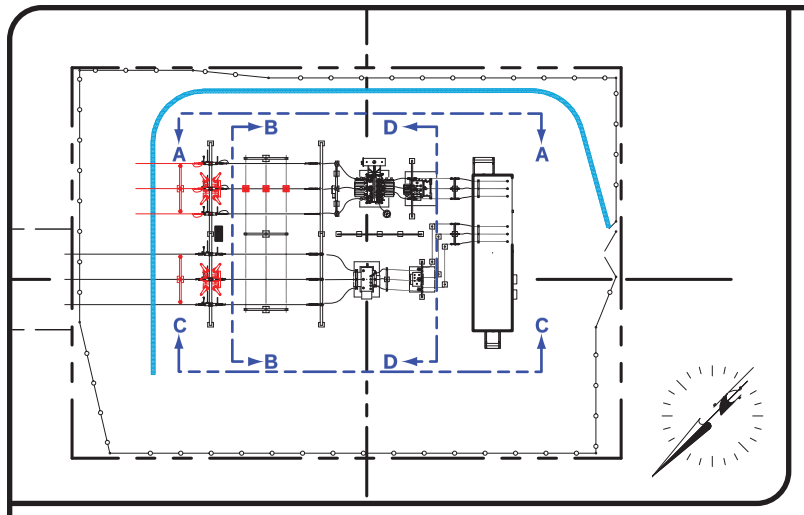

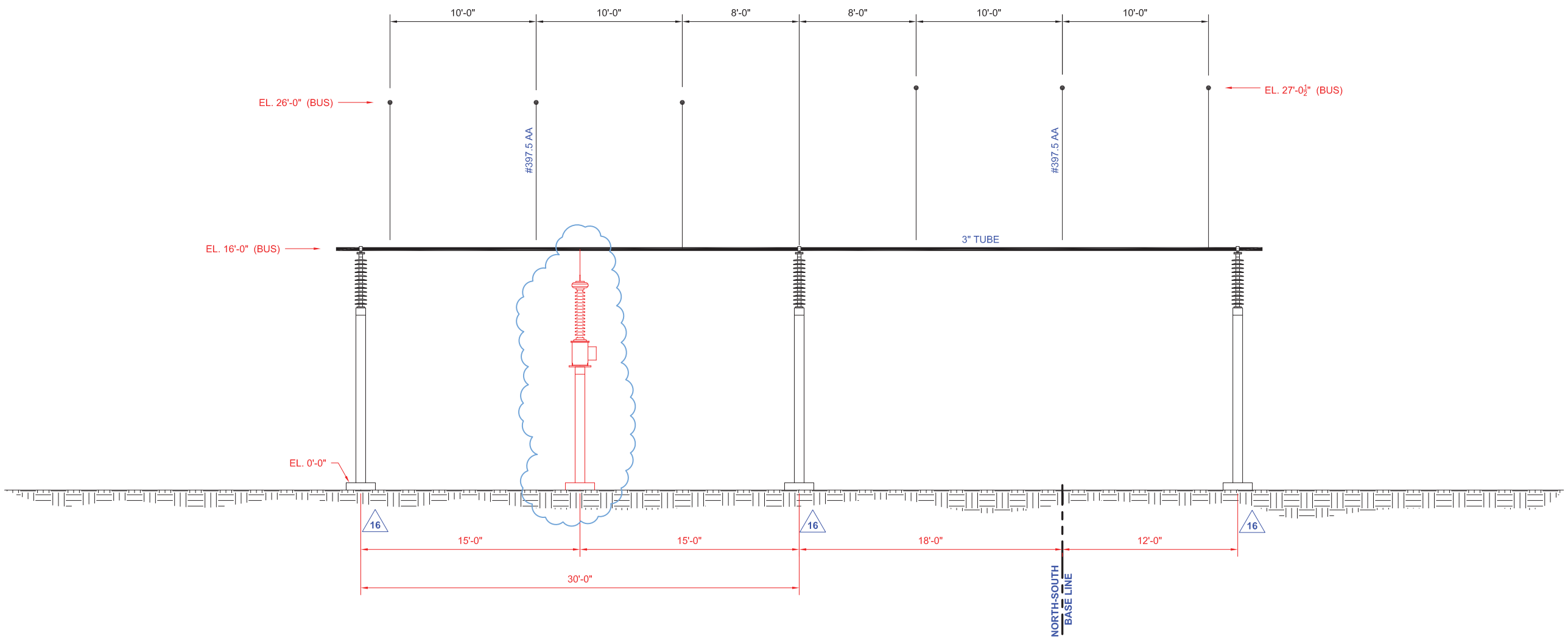

Elevation B-B

Sierra Pacific™

Northstar Substation Elevation B-B

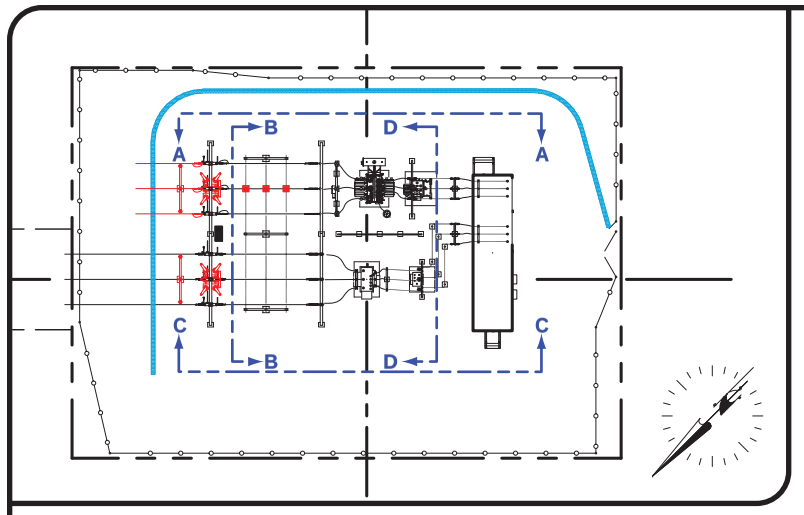

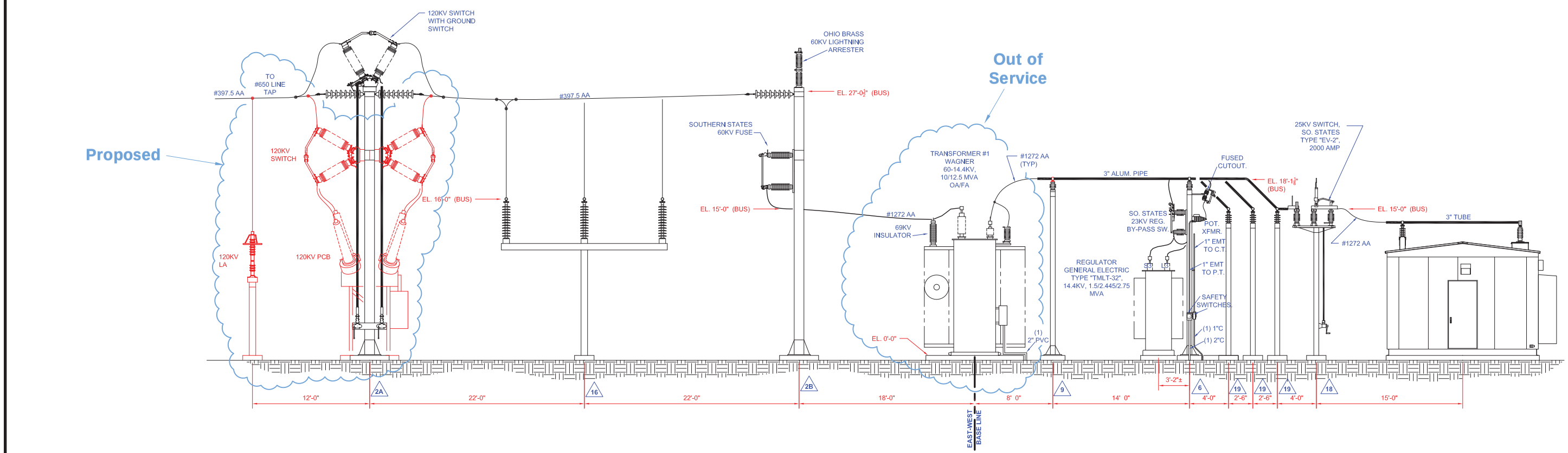

Elevation C-C

Sierra Pacific™

Northstar Substation Elevation C-C

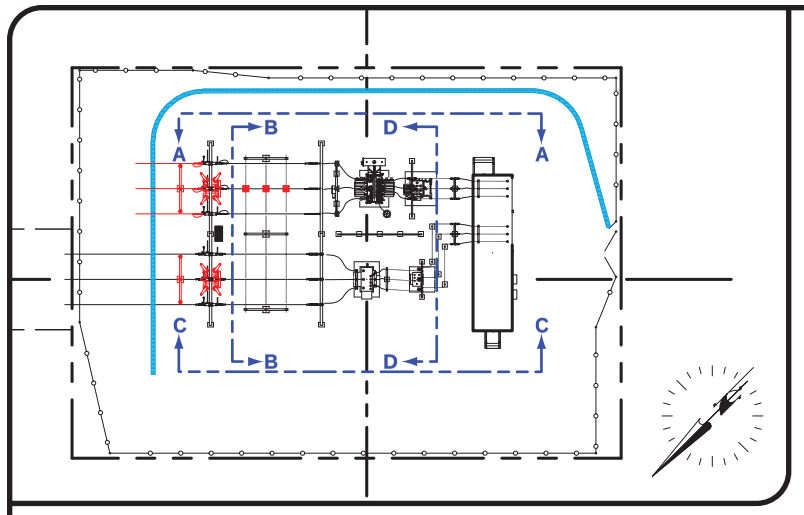

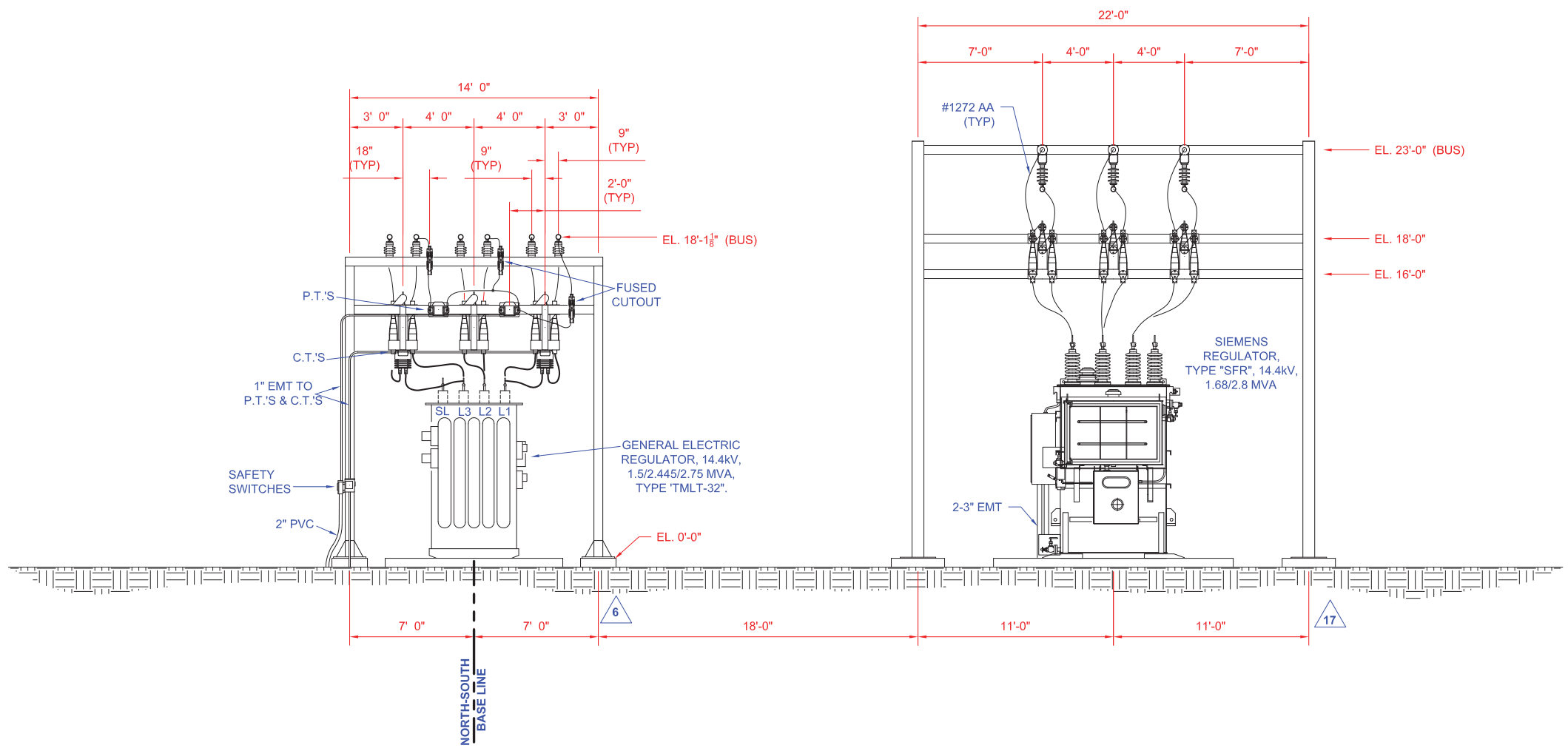

Elevation D-D

Sierra Pacific™

Northstar Substation Elevation D-D

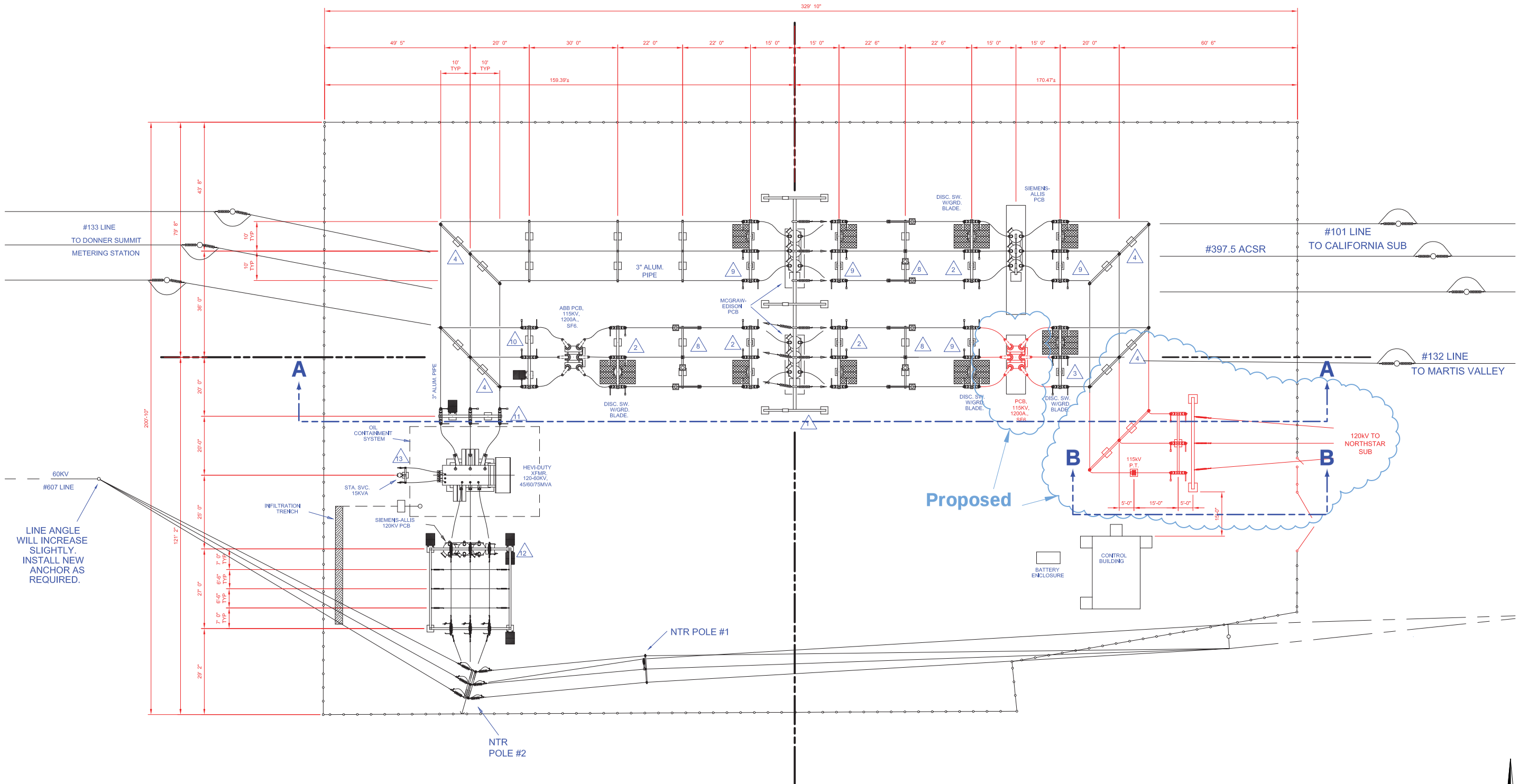

Sierra Pacific™

North Truckee Switching Station Plot Plan

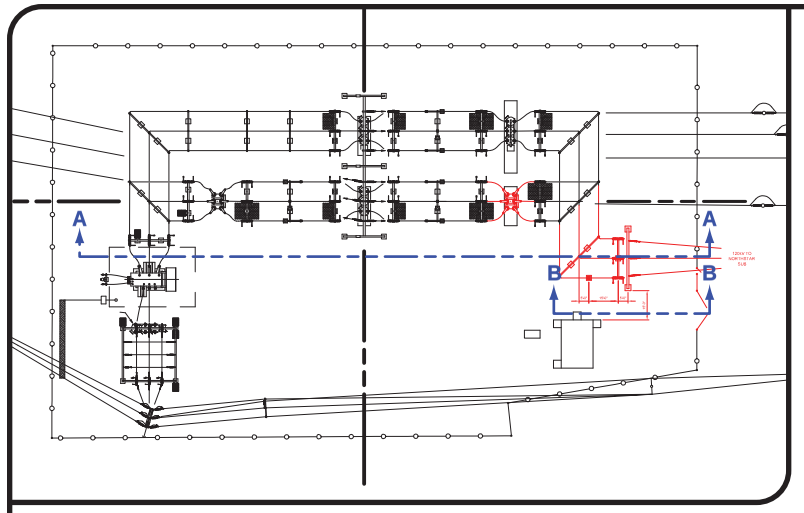

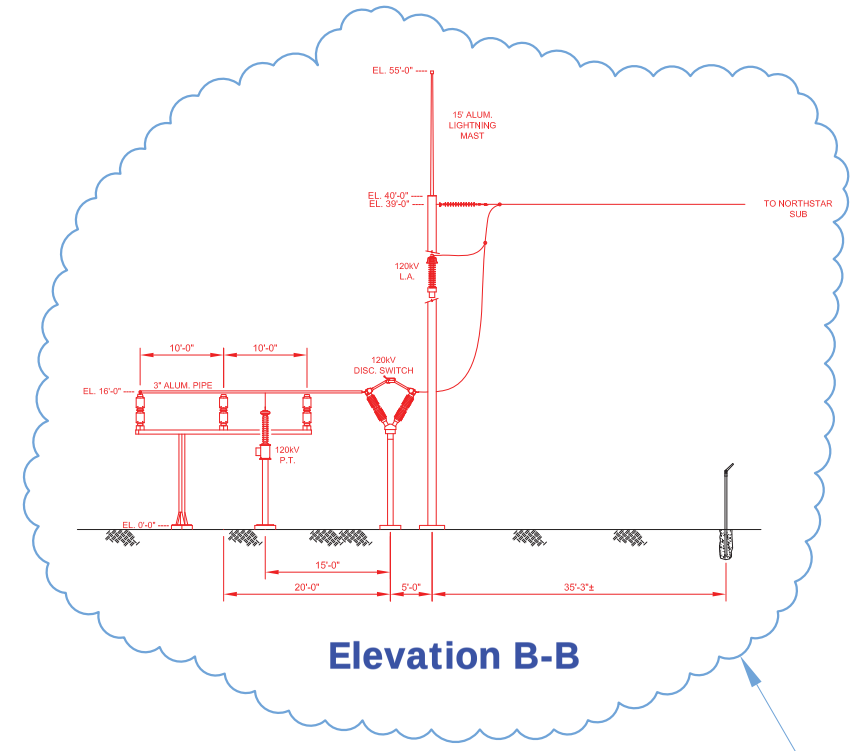

Elevation B-B

Proposed

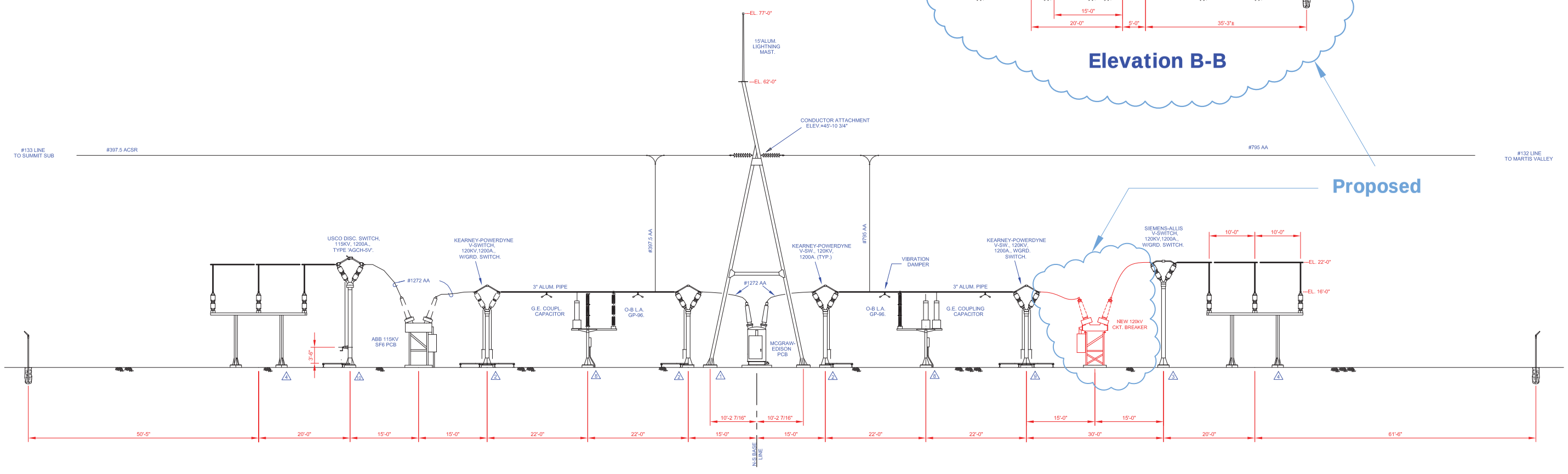

Elevation A-A

Sierra Pacific™

North Truckee Switching Sation Elevation A-A and B-B

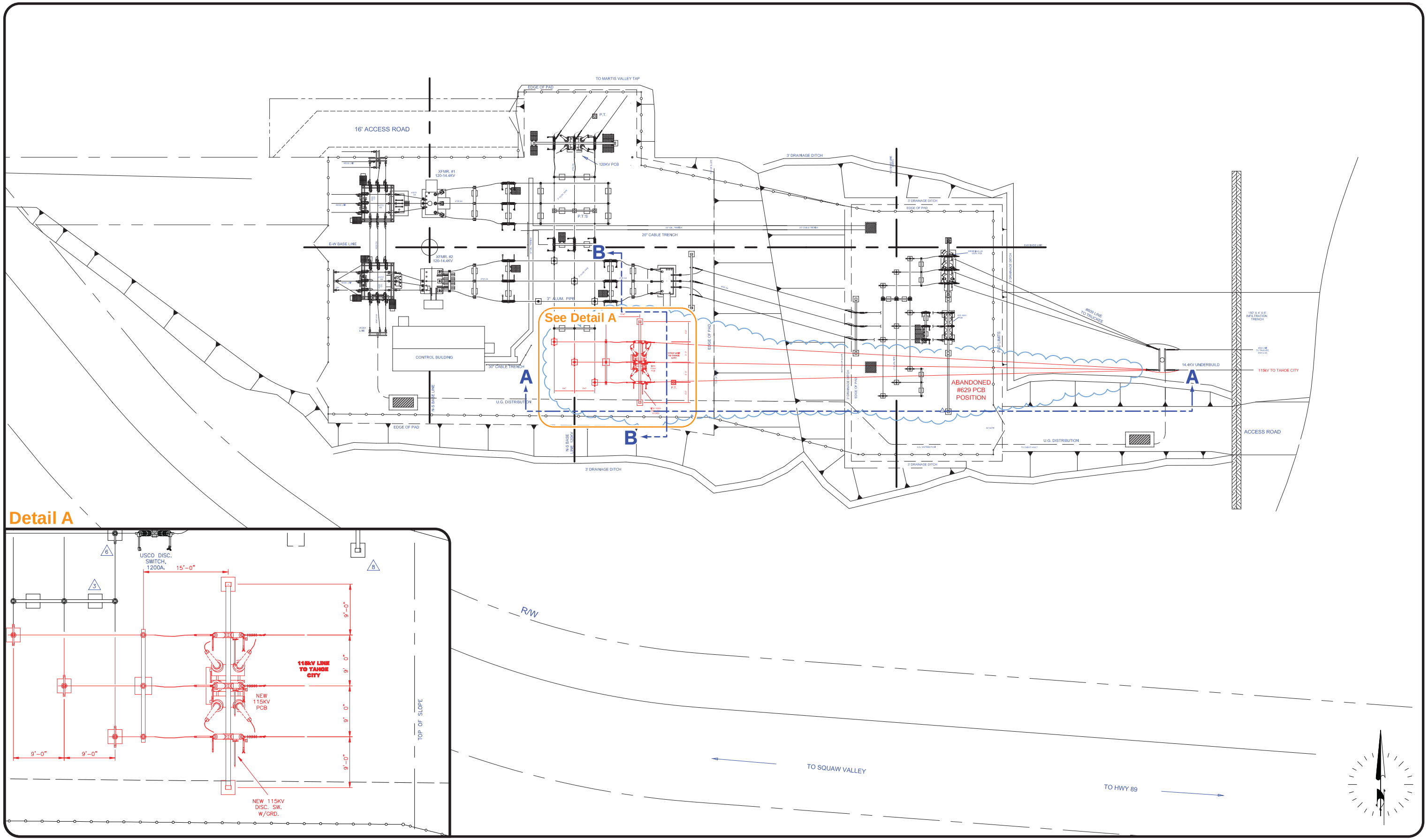

Sierra Pacific™

Squaw Valley Substation Plot Plan

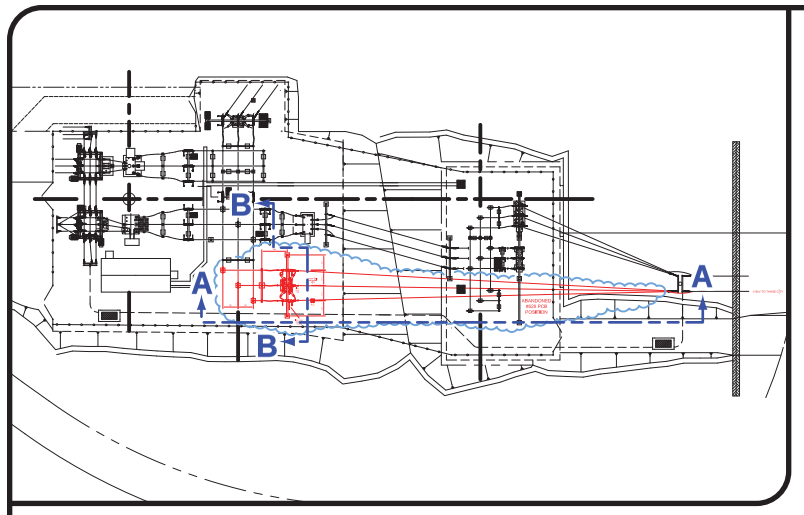

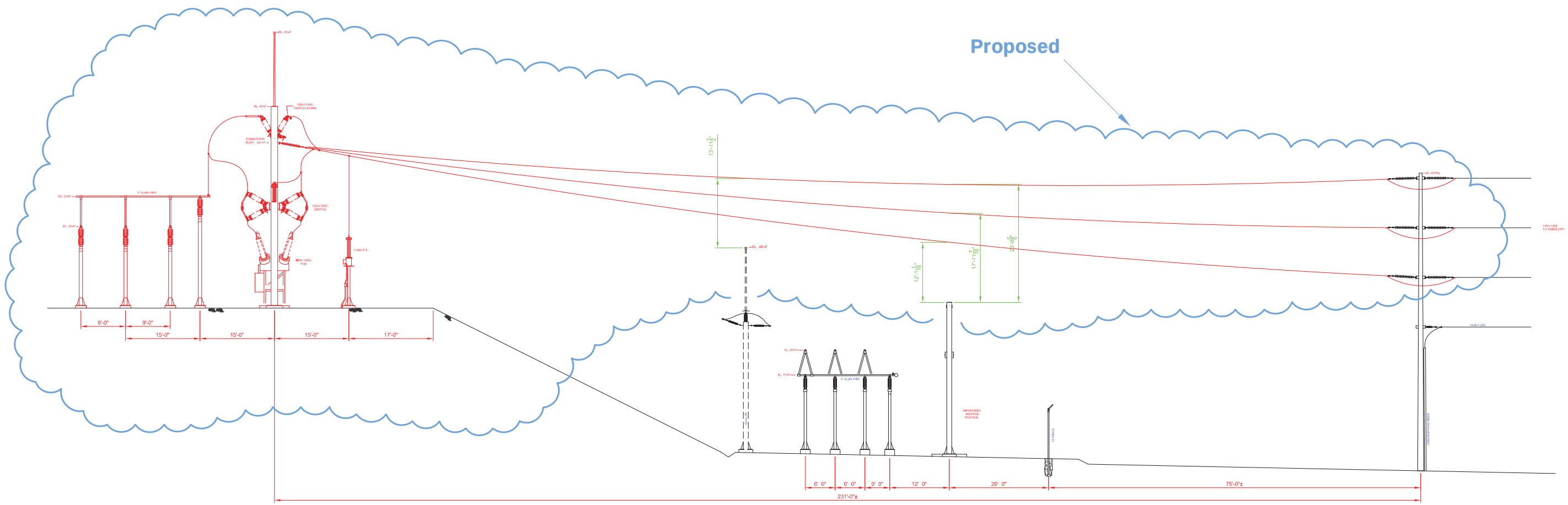

Elevation A-A

Sierra Pacific™

Squaw Valley Substation Elevation A-A

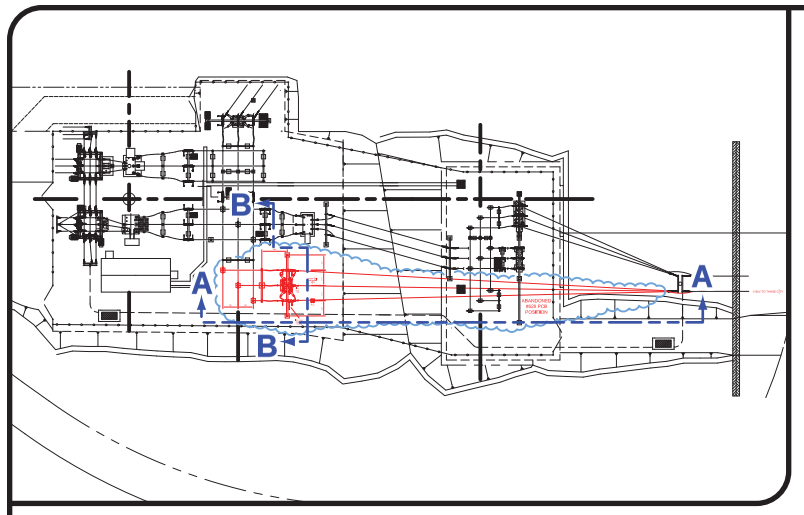

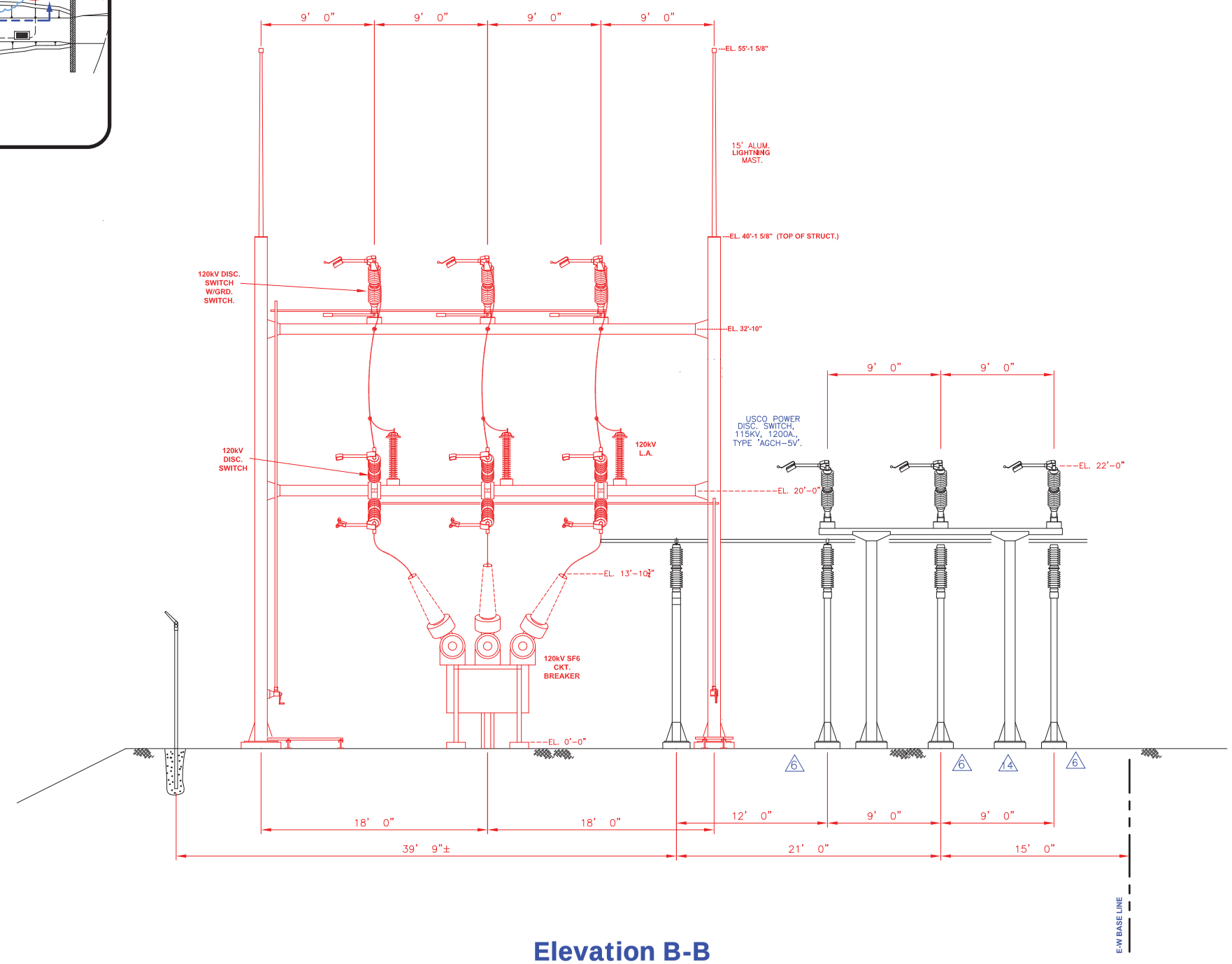

Elevation B-B

Sierra Pacific™

Squaw Valley Substation Elevation B-B

ATTACHMENT 3-E: ELECTRIC AND MAGNETIC FIELDS