2.0 Project Description

2.1 Overview of the Proposed Project

San Diego Gas & Electric Company (the applicant or SDG&E) proposes to rebuild its 138/12-kilovolt (kV) Capistrano Substation in the city of San Juan Capistrano as a 230/138/12-kV substation called, "San Juan Capistrano Substation." The applicant also proposes to construct a double-circuit 230-kV transmission line to connect the proposed San Juan Capistrano Substation to Talega Substation in San Diego County, east of the city of San Clemente. The primary components of the proposed project would include:

1. Rebuilding and upgrading the 138/12-kV 60-megavolt ampere (MVA) air-insulated Capistrano Substation as a 230/138/12-kV 700-MVA gas-insulated (GIS) substation that would be named San Juan Capistrano Substation;[1]
2. Replacing a single-circuit 138-kV transmission line between the applicant's Talega and Capistrano substations with a new double-circuit 230-kV transmission line (approximately 7.8-miles long);
3. Relocating several transmission line segments (approximately 1.8 miles, total) adjacent to Talega and Capistrano substations to accommodate the proposed Capistrano Substation expansion and new 230-kV line; and
4. Relocating several 12-kV *distribution lines*[2] segments (approximately 6 miles) into underground *conduit*[3] and overhead on existing and new structures located between the Capistrano Substation and Prima Deschecha Landfill.

Figures 2-1 and 2-2 provide an overview of the proposed project. Appendices C and D provide detailed map sheets that demark the existing and proposed 12-kV, 69-kV, 138-kV, and 230-kV alignments and substation sites. Construction of the proposed project would take approximately 64 months.

2.2 Setting and Location of the Proposed Project

The proposed project would be constructed within the cities of San Juan Capistrano and San Clemente, unincorporated Orange County, and United States Marine Corps land in San Diego County. The areas within these four jurisdictions where components of the proposed project would be constructed make up the *proposed project area*. The following sections describe the applicant's South Orange County 138-kV transmission system and existing facilities at the construction sites and along the ROW where construction would occur as part of the proposed project.

[1] Substation capacity is typically expressed in terms of MVA for alternating current (AC) electrical system.
[2] According to California Public Utilities Commission (CPUC) General Order No. 131-D, *distribution lines* are electrical lines that operate at voltages below 50 kV (CPUC 1995).
[3] The term *conduit* refers to protective tubing through which electrical transmission and distribution cables would be installed. Polyvinyl chloride (PVC) conduit is typically used for power line installations.

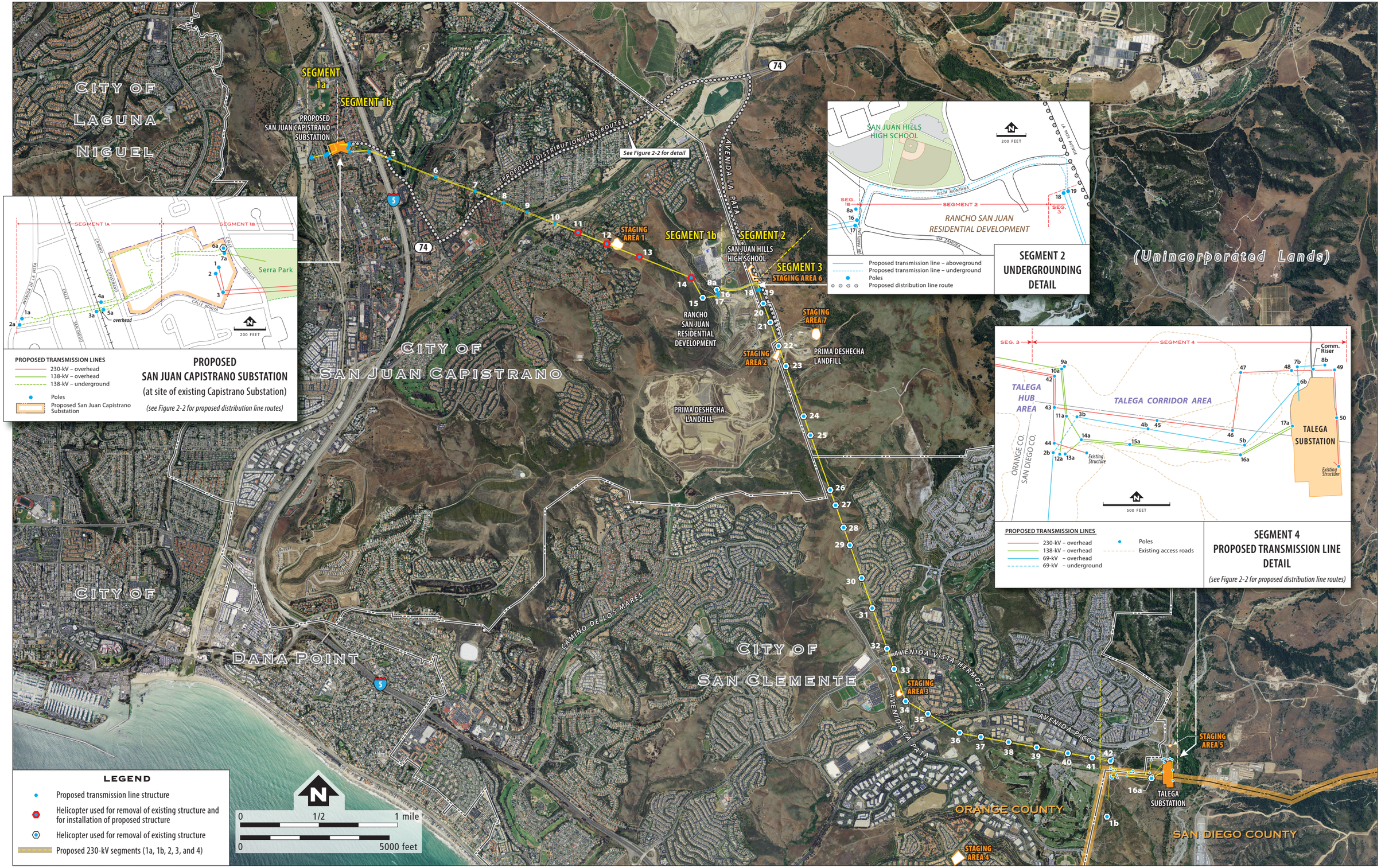

1003279.0001.01.04.d.ai (2016 Archives) 02/15/2016

Figure 2-1 **Overview of the Proposed Substation and Transmission Lines**

South Orange County Reliability Enhancement Project

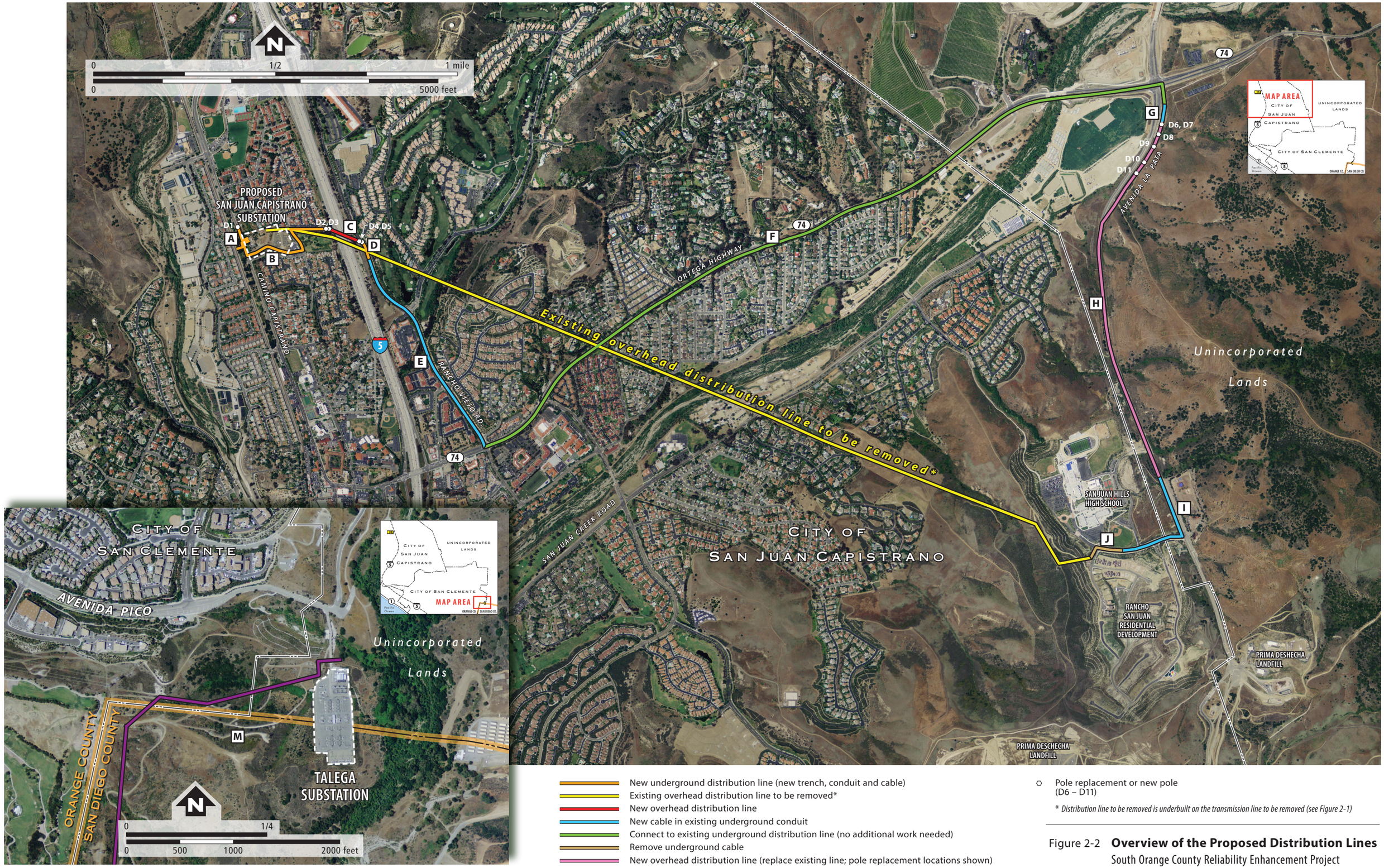

New underground distribution line (new trench, conduit and cable)
Existing overhead distribution line to be removed*
New overhead distribution line
New cable in existing underground conduit
Connect to existing underground distribution line (no additional work needed)
Remove underground cable
New overhead distribution line (replace existing line; pole replacement locations shown)
New underbuild on existing overhead line

○ Pole replacement or new pole (D6 – D11)

* *Distribution line to be removed is underbuilt on the transmission line to be removed (see Figure 2-1)*

Figure 2-2 **Overview of the Proposed Distribution Lines**
South Orange County Reliability Enhancement Project

1003279.0001.04.e2.ai.ai 03/18/2016

2.2.1 South Orange County 138-kV System

The applicant's South Orange County 138-kV system provides electricity to cities within southern Orange County, including Lake Forest, Aliso Viejo, Mission Viejo, Laguna Niguel, Rancho Santa Margarita, San Juan Capistrano, San Clemente, and Dana Point. The South Orange County 138-kV system originates at Talega Substation and loops to the north through Pico, Capistrano, Laguna Niguel, Trabuco, Margarita, and Rancho Mission Viejo substations and southwest through San Mateo Substation (Figure 1-1).

The components of the South Orange County 138-kV system that would be upgraded as part of the proposed project include Capistrano and Talega substations and associated transmission and distribution lines.

2.2.1.1 Capistrano Substation

Capistrano Substation is one of the seven 138/12-kV substations within the South Orange County 138-kV system. It is located within an urbanized area in the city of San Juan Capistrano (Figure 2-3). The existing substation is open-air insulated, which means that its switchgear is insulated by air rather than being enclosed and insulated by sulfur hexafluoride gas (SF_6). Utility structures at the substation are approximately 55-feet tall.

The approximately 6.4-acre substation site is bounded by residential property to the north and streets to the west, east, and south (Camino Capistrano, Calle Santa Rosalia, and Calle Bonita, respectively). It is located approximately 700 feet west of Interstate 5 (I-5). Camper and recreational use trailers are stored at a lot along the southeastern edge of the site. East of the substation site across Calle Santa Rosalia is Junipero Serra Park (Serra Park), a City of San Juan Capistrano park.

The site has an upper yard area and lower yard area (Figure 2-3). The Capistrano Substation facilities are located on approximately 2 acres of land on the upper yard. The lower yard is occupied by an abandoned concrete structure (5,200 square feet) that was previously used for electrical utility purposes (starting in 1918). Between the two yards is a 0.5-acre sloped area. The difference in elevation between the upper and lower yard areas is approximately 47 feet.

Three 138-kV transmission lines (TL13816, TL13834, and TL13837; Table 2-1) and seven 12-kV distribution lines connect to Capistrano Substation. TL13816 provides electrical service to the substation from Talega Substation via Pico Substation. The other two transmission lines connect Capistrano Substation to Trabuco Substation (TL13834) and Laguna Niguel Substation (TL13837). Two additional 138-kV transmission lines are adjacent to the southern border of Capistrano Substation but do not enter the substation (TL13833 and TL13835). The substation has two 138/12-kV 30 MVA transformers, one 138-kV capacitor bank, two 12-kV capacitor banks, and a control shelter. The capacity of the 138/12-kV substation is 60 MVA.

Aerial photo source: © Google Maps, 2014

N

0 100 200

FEET

Property boundary (San Diego Gas & Electric)

EE-003279-0001-04TTO.c.ai 07/25/2014

Figure 2-3

Capistrano Substation Site

South Orange County Reliability Enhancement Project

Table 2-1 Existing and Proposed San Juan Capistrano and Talega Transmission Lines

Existing Transmission Line Configuration [a.]	Post-Proposed Project Transmission Line Configuration [a.]
TL13816 (Pico–Capistrano)	TL13816 (San Juan Capistrano–Pico)
—	TL138XX [b.] (San Juan Capistrano–Pico)
TL13833 (Pico –Trabuco) [c.]	TL13833 (San Juan Capistrano–Trabuco)
TL13834 (Capistrano–Trabuco)	TL13834 (San Juan Capistrano–Trabuco)
TL13837 (Capistrano– Laguna Niguel)	TL13837 (San Juan Capistrano–Laguna Niguel)
—	TL13847 (San Juan Capistrano–Laguna Niguel)
TL695 (Cristianitos–Talega–Basilone)	TL695 (Cristianitos–Talega—Basilone)
—	TL13812 (Talega–San Mateo)
TL13835 (Talega–Laguna Niguel–San Mateo) [d.]	~~TL13835 (San Mateo–Pico)~~
TL13836 (Talega–Pico)	TL13836 (Talega–Pico)
TL13846 (Talega–Pico–San Mateo) [e.]	TL13846 (Talega–San Mateo–Pico)
TL23007 (San Onofre–Talega) [f.]	TL23007 (San Onofre–San Juan Capistrano)
TL23030 (Escondido–Talega) [g.]	TL23030 (Escondido–Talega–San Juan Capistrano)

Source: SDG&E 2012b
Key: kV = kilovolt
Notes:
[a] The names in parentheses refer to the substations connected by the transmission lines. The name, Pico, for example, refers to Pico Substation. The only exception is the name, San Onofre, which refers to the switchyard at the retired San Onofre Nuclear Generating Station site.
[b] The transmission line number would be defined during final engineering.
[c] TL13833 (new) and TL138XX are formed from a single 138-kV line (TL13833 [existing]).
[d] ~~TL13835 (new) and~~ TL13847 ~~are~~is formed from a single 138-kV line (TL13835 [existing]).
[e] ~~TL13846 (new) and~~ TL13812 ~~are~~is formed from a single 138-kV line (TL1383~~46~~ [existing]).
[f] TL23007 would be extended from Talega Hub to the proposed San Juan Capistrano Substation without entering Talega Substation.
[g] TL23030 would be creating a three terminal line extending existing TL23030 from Talega Substation to the proposed San Juan Capistrano Substation.

2.2.1.2 Talega Substation and Talega Hub/Corridor

Talega Substation is the only 230-kV bulk electrical source for the South Orange County 138-kV system. The 230/138/69-kV substation is located on approximately 6.1 acres of land owned by the United States Marine Corps within its Camp Pendleton base. The substation footprint is located partially within San Diego County boundaries and is within an area leased to the State of California (State) by the United States Marine Corps. The leased area, which extends from the substation southwest to the Pacific Ocean, is managed by the State of California Department of Parks and Recreation as part of the San Onofre State Beach park grounds and watershed (California State Parks 2010).

The entrance to Talega Substation is located approximately 550 feet south of the Avenida Pico and Camino La Pedriza intersection. Pacific Golf Club is located approximately 2,000 feet to the west, and a residential development is located approximately 1,000 feet to the northwest. United States Marine Corps Camp Pendleton facilities are located approximately 1,000 feet to the east.

Three 230-kV transmission lines (TL23007, TL23030, and TL23052); four 138-kV transmission lines (TL13831, TL13835, TL13836, and TL13846); and one 69-kV transmission line (TL695) connect to Talega Substation (Table 2-1). The substation has two 230/138-kV 392 MVA transformers, one 230/138-kV 168 MVA transformer, one 230/138-kV 150 MVA transformer, one 138/69-kV 125 MVA

transformer, two 230-kV capacitor banks, one Static Compensator,[4] and a control shelter. The capacity of the existing 230/138/69-kV substation is approximately 1,100 MVA.[5]

The area west of Talega Substation is occupied by 230-kV, 138-kV, and 69-kV transmission lines owned by the applicant. Approximately 0.3 miles west of Talega Substation, where the applicant's and Southern California Edison's parallel transmission line corridors turn south, is referred to by the applicant as *Talega Hub*. The area from Talega Hub east to Talega Substation is referred to as *Talega Corridor* (Figure 2-1).

2.2.1.3 Talega to Capistrano Transmission Corridor

The 7.8-mile-long transmission line corridor between Talega and Capistrano substations contains the applicant's single-circuit 138-kV transmission line TL13835, two additional SDG&E 138-kV lines, portions of 12-kV Circuit 315, and several Southern California Edison 220-kV transmission lines (see Figure 2-5a in Section 2.3.3.3, "Existing and Proposed Transmission Line Structures"). The transmission corridor is identified on Figure 2-1, which presents the proposed 230-kV line's route. TL13835 would be removed and replaced by the proposed double-circuit 230-kV line.

Lattice steel towers, steel poles, and wood poles support TL13835, which is primarily an overhead line. TL13835 transitions to an underground position for approximately 2,000 feet along Vista Montana Road, which is the entrance to San Juan Hills High School and the Rancho San Juan residential development (Figure 2-1). Northwest of the San Juan Hills High School and the Rancho San Juan residential development area, structures supporting TL13835 also support a distribution line (12-kV Circuit 315).

2.2.1.4 12-kV Distribution Lines

Seven distribution lines (12-kV Circuits 195, 196, 197, 313, 314, 315, and 799) originate at Capistrano Substation. The same seven distribution circuits would originate at the proposed San Juan Capistrano Substation. Of the seven, only Circuit 315 would be relocated as part of the proposed project. Circuit 315 extends from Capistrano Substation to San Juan Hills High School and the Rancho San Juan residential development (Figure 2-2) along 138-kV line TL13835 (see above, Section 2.2.1.3, "Talega to Capistrano Transmission Corridor"). It would be removed and relocated because of the proposed 230-kV transmission line's replacement of TL13835. The other six distribution lines would exit the proposed San Juan Capistrano Substation with only minor routing adjustments, as described in Section 2.3.3.2, "Proposed 12-kV Distribution Line Segments."

Two additional 12-kV circuits would be modified as part of the proposed project. Circuit 1242, which extends to Prima Deschecha Landfill along La Pata Avenue (Avenida La Pata), would be reconductored and collocated on the double-circuit structures proposed for Circuit 315 along La Pata Avenue (Figure 2-

[4] A Static Compensator, which is typically referred to as a STATCOM, is a regulating device used to optimize the power transfer capability of AC transmission systems. Reactive power (volt-amperes reactive or VARs) is regulated in AC transmission systems to maintain required voltage levels. STATCOMs are one option for regulating reactive power. Talega Substation has a STATCOM rated for 100 megavolt-amperes reactive power, which may be referred to as 100 Mega VARs or 100 MVARs.

[5] The normal operating capacity of Talega Substation is approximately 1,100 MVA. During an *N-1 condition*, under which a single transmission element (e.g., a transmission line or a transformer) goes out of service, Talega Substation's capacity could temporarily be increased to 1,330 MVA. To produce the temporary increase in capacity, each of the substation's four 230/138-kV transformers would temporarily operate at a higher MVA rating.

2). Circuit 204 is *underbuilt*[6] on the existing transmission line structures near Talega Substation. It would be relocated from the existing 69-kV transmission line structures to the proposed 69-kV transmission line structures also near Talega Substation.

2.3 Description of Components of the Proposed Project

2.3.1 San Juan Capistrano Substation

The proposed substation would initially have two 230/138-kV 392 MVA transformers, three 138/12-kV 30 MVA transformers, two 230-kV capacitor banks, three 12-kV capacitor banks, two concrete control shelters, and two large steel-framed buildings with metal siding to house the 230-kV and 138-kV GIS switchgear. If needed in the future, space would be available at the proposed substation site for a total of three 230/138-kV 392 MVA transformers with a combined capacity of 1,176 MVA and four 138/12-kV 30 MVA transformers with a combined capacity of 120 MVA.

The initial build of the substation would connect to two 230-kV transmission lines, six 138-kV transmission lines, and seven 12-kV distribution lines. Up to sixteen 12-kV distribution lines could be connected to the substation if needed in the future. Table 2-2 summarizes the differences between the existing and proposed substations.

Table 2-2 Existing Capistrano Substation and Proposed San Juan Capistrano Substation Components

Capistrano Substation	San Juan Capistrano Substation
- 60 MVA electrical capacity	- 700 MVA electrical capacity [1.]
- All open-air insulated switchgear	- Gas-insulated 230-kV and 138-kV switchgear
- Three 138-kV transmission lines	- Two 230-kV transmission lines
- Seven 12-kV distribution lines	- Six 138-kV transmission lines
- Two 138/12-kV 30 MVA transformers	- Seven 12-kV distribution lines
- Capacitor banks	- Two 230/138-kV 352 MVA transformers
- Concrete control shelter	- Three 138/12-kV 30 MVA transformers
	- Capacitor banks
	- Two concrete control shelters
	- Two switchgear buildings with metal siding [2.]

Source: SDG&E 2012b
Key: MW = megawatts, MVA = megavolt ampere
Notes:
1 If needed in the future, space would be available at the proposed substation site for a total of three 230/138-kV 352 MVA transformers with a combined capacity of 1,050 MVA and four 138/12-kV 30 MVA transformers with a combined capacity of 120 MVA.
2. The proposed gas-insulated switchgear would be housed in two buildings. One would be approximately 65-feet wide, 180-feet long, and 50-feet tall and the other would be approximately 85-feet wide, 150-feet long, and 45-feet tall.

[6] Distribution lines are sometimes *underbuilt*—installed beneath—higher voltage lines on utility structures. Telecommunications lines may be underbuilt on utility structures as well. Cables and associated attachment components that are installed on the lower sections of utility structures are referred to as underbuild.

2.3.1.1 Proposed Substation Site

The proposed San Juan Capistrano Substation and its associated facilities would be constructed at the applicant's existing 6.4-acre Capistrano Substation property. The new 138-kV facilities would be installed within the proposed lower-mid pads (Figure 2-4 and Appendix E) and existing 138-kV facilities within the site's upper yard area would be removed (Figure 2-3). The proposed substation facilities would require the entire 6.4-acre property. The existing substation is located on approximately 2 acres of the 6.4-acre property. Refer to Appendix S, "NRHP Correspondence and Preservation Alternative," to view the general arrangement plan for the San Juan Capistrano Substation with the implementation of MM CUL-8 (see Section 4.5, "Cultural Resource").

Upper, Upper-Mid, Lower-Mid, and Lower Pads

The existing Capistrano Substation site has upper and lower yard areas. For construction of the proposed San Juan Capistrano Substation, the existing upper and lower yard areas would be excavated, graded, filled, and compacted into four terraced pads: an upper pad, upper-mid pad, lower-mid pad, and lower pad (Figure 2-4 and Appendix E and Appendix S). The proposed 230-kV substation components would be constructed on upper, upper-mid, and lower-mid pads. The proposed 138-kV and 12-kV substation components would be constructed on the lower-mid and lower pads.

2.3.1.2 Substation Equipment and Structures

230-kV Equipment and Structures

The 230-kV GIS switchgear would include three bays connected to two 230-kV operating buses. Each bay would be arranged in a *breaker-and-a-half configuration*—three circuit breakers in each bay. Each bay will have connection points for two electrical elements (e.g., transmission lines, transformers). This configuration would allow for the installation of up to six elements attached to the bays and two elements attached to each bus end (San Juan Capistrano will have 230-kV capacitors attached to each bus).[7] The switchgear would be housed in a steel-framed, metal-sided building that would be approximately 65-feet wide, 180-feet long, and 50-feet tall (Figure 2-4). The metal 230-kV GIS building would be constructed on the upper-mid pad (Figure 2-4 and Appendix E).

On the east side of the lower-mid pad, two 230/138-kV 392 MVA transformers would be installed with oil spill containment basins. A firewall (approximately 52-feet wide by 30-feet tall) would be installed between the two transformers. A steel *A-frame dead-end structure*[8] (approximately 55-feet-tall) would be installed to terminate the 230-kV lines from the metal 230-kV GIS building at the 230/138-kV transformers. Two 230-kV capacitor banks would be installed on the upper pad.

A concrete masonry block control shelter (approximately 55-feet wide, 32-feet long, and 12-feet tall) would be installed adjacent to the north side of the metal 230-kV GIS building on the upper-mid pad to house substation relays, controls, and station batteries. The two proposed 230-kV transmission lines would extend into the substation overhead from one double circuit pole (proposed pole No. 3; approximately 120-feet tall) to two single-circuit poles (proposed poles No. 1 and No. 2; Figure 2-1; approximately 80-feet tall).

[7] The two proposed 230-kV transmission lines would each have three 230-kV conductor cables. A total of six 230-kV conductor cables would enter the proposed San Juan Capistrano Substation.

[8] *Dead-end structures* are higher-strength structures used at the termination point of powerlines that are designed to support the high-tension forces associated with the length of the line leading up to the termination point. The proposed *A-frame dead-end structure* is shown in a substation simulation in Section 4.1, "Aesthetics."

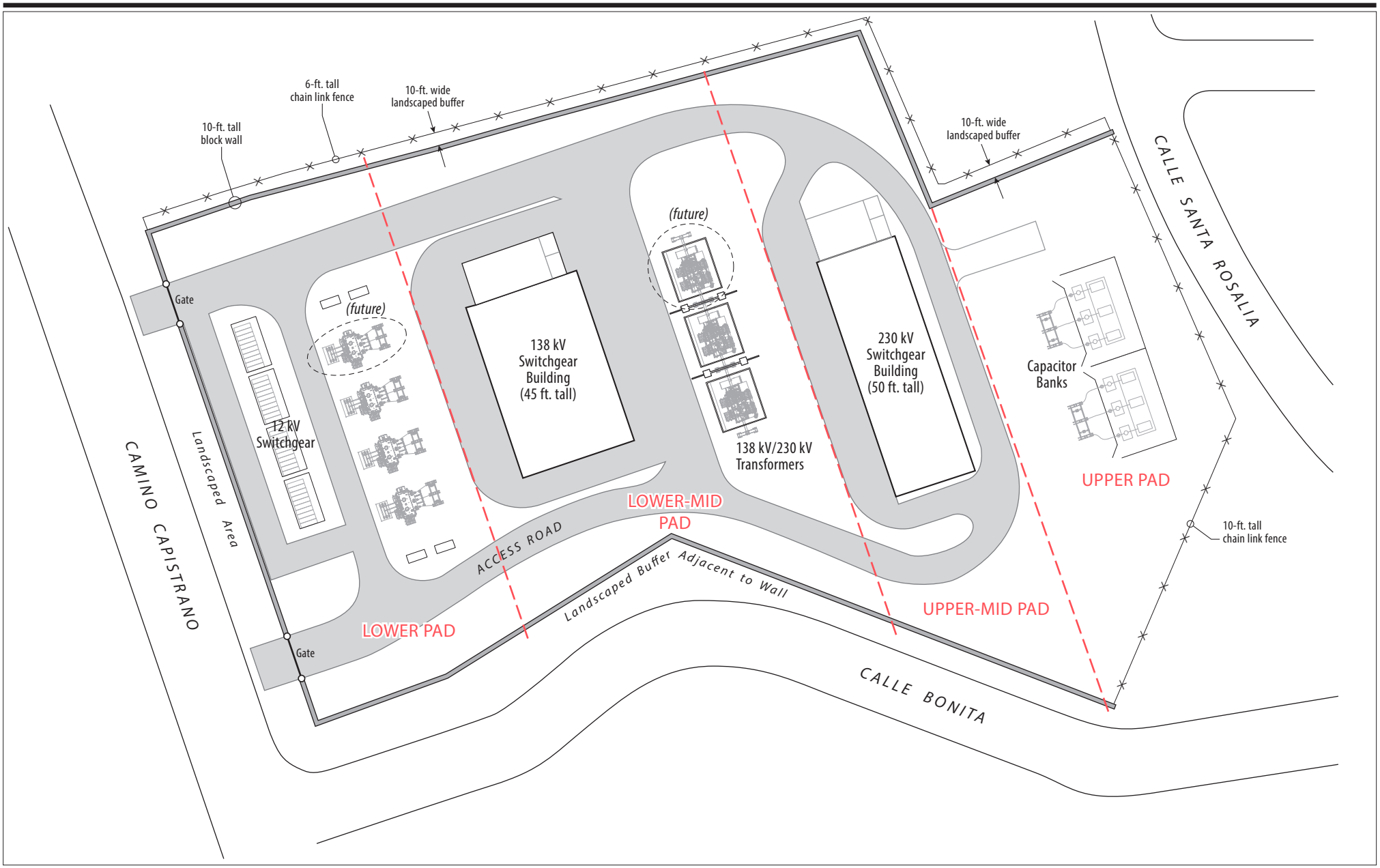

EE-003279-0001-04TTO.e.ai 10/24/2014

Figure 2-4

Proposed San Juan Capistrano Substation

South Orange County Reliability Enhancement Project

138-kV and 12-kV Equipment and Structures[9]

The 138-kV equipment would include two 138-kV operating buses and eight bays of breakers in breaker-and-a-half configuration. Each of the bays would consist of three breakers, and protection equipment and two connection points for electrical elements (e.g., transmission lines, transformers). This equipment would be gas insulated and housed in a steel-framed, metal-sided building that would approximately 85-feet wide, 150-feet long, and 45-feet tall (Figure 2-4). The metal 138-kV GIS building would be constructed on the lower-mid pad (Figure 2-4 and Appendix E). A concrete masonary block control shelter (approximately 70-feet wide, 32-feet long, and 12 feet tall) would be installed adjacent to the north side of the metal 138-kV GIS building on the lower-mid pad to house substation relays, controls, and station batteries.

On the west side of the lower pad, three 138/12-kV 30 MVA transformers would be installed with oil spill containment basins. Firewalls (approximately 32-feet wide by 16-feet tall) would be installed between the three transformers. A 138-kV underground cable would be installed to terminate the 138-kV bus drops from the metal 138-kV GIS building at the 138/12-kV transformers.

Four 138-kV transmission lines would exit the west side of the substation (getaway) in a new common underground duct package. (Segment 1a, Figure 2-1). Two 138-kV transmission lines would exit overhead from the east side of the substation on steel cable poles (proposed poles No. 6a and No. 7a, Figure 2-1; approximately 90- to 125-feet tall). Three 12-kV distribution lines would extend from the substation in new underground distribution duct package (12-kV Segment B, Figure 2-2).

Three termination stands (approximately 11-to 13-feet tall) would be installed to terminate the 12-kV bank leads into the 12-kV switchgear utilizing underground cable, if possible. Three sections of 12-kV switchgear would be installed with twelve 12-kV circuit positions. Three 12-kV capacitor banks would be installed.

2.3.1.3 Perimeter Masonry Wall, Fencing, and Security[10]

The proposed substation would enclosed by a 10-foot-tall masonry wall on its northern, southern, and western boundaries (Figure 2-4). Landscaping would be installed to soften the visual appearance of the masonry wall. Along the eastern boundary, a chain link fence topped with 2 feet of barbed wire would be installed to replace the existing chain link fence. The chain links would have vinyl, privacy slats woven between the links. The fence along the eastern substation boundary would be 8-feet tall with 2 feet of barbed wire. The applicant may install a wrought-iron fence along the eastern boundary of the substation based upon input from the City of San Juan Capistrano Architectural Design Review Committee, as discussed further below.

In addition, a 6-foot-tall chain link fence without barbed wire would be installed along the northern boundary of the substation site that is adjacent to private residences. In these areas, the masonry wall would be set back a minimum of 10 feet from the property line to provide a landscaped buffer zone between the wall and fence.

[9] Implementation of MM CUL-8 (see Section 4.5 "Cultural Resources" and Appendix S) would revise the design and capacity of the 138/12-kV components of the proposed San Juan Capistrano Substation.

[10] Implementation of MM CUL-8 (see Section 4.5 "Cultural Resources" and Appendix S) would revise the design and capacity of the western perimeter wall for the proposed San Juan Capistrano Substation (see Figure 4.1-7).

Public Comment on the Design of Proposed Substation Wall

The applicant hosted a 2-hour meeting (a design charrette) with the local community and City of San Juan Capistrano officials at the San Juan Hills Golf Club on April 18, 2012, to identify an architectural design theme for the proposed San Juan Capistrano perimeter wall. Approximately 50 members of the public attended that meeting. The attendees included neighbors of the substation, the City of San Juan Capistrano Architectural Design Review Committee and officials, and other interested residents. The applicant presented five design simulations for discussion at the meeting. General consensus favored a modern/California mission (Spanish mission) design style, as shown in the visual simulations presented in Section 4.1, "Aesthetics"). The favored design concepts would be used when the applicant participates with the City of San Juan Capistrano's ad hoc committee to further refine the design. The favored design concept at the April 18, 2012, meeting was the Spanish mission style.

The applicant met with members of the City of San Juan Capistrano Architectural Design Review Committee in 2013 after holding the April 2012 public meeting. The applicant worked with an architect to incorporate the Spanish mission style design and presented the design to the City of San Juan Capistrano Architectural Design Review Committee on July 29, 2014.

Substation Security Systems

The applicant's security system at the San Juan Capistrano Substation would be designed using industry best practices to protect life, property, and electric system reliability while complying with local, state, and federal regulatory guidance. The following is a list of equipment that is currently being installed at SDG&E's substations (depending upon type and location of the substation). The final security design for San Juan Capistrano Substation would be based upon SDG&E's current practices at the time of the substation energization.

- Security Control Panels with 8 Hour Battery Back-Up;
  - Door Access Control
  - Alarm Points (door sensors, motion detection, Specialized Outdoor Cabinets)
  - 24/7 Monitoring/Connection - Centrally Managed at Headquarters Corporate Security Operations Center
- Video Cameras with Infrared Illuminators;
- Thermal Imaging Cameras (Broader Motion Detection, Tracking, Accuracy);
- Targeted Motion Detectors;
- Hybrid Digital Video Recorders (Analog and Digital DVR);
- Perimeter Intrusion Detection (Microwave, Thermal Imaging);
- Interior and Exterior Card Readers at Control Shelter Doors;
- Interior and Exterior Video Cameras at Control Shelter Doors;
- Door Sensors at Control Shelter Main and Battery Room Doors; and
- Medeco Logic 3 Electro-Mechanical Lock Replacement (doors, gates).

Construction Fire Safety

The proposed project would be constructed consistent with Electric Standard Practice 113.1 – Wildland Fire Prevention and Fire Protection. As stated in this standard, the Control Centers, Dispatch Center, and Fire Coordinator would provide general information to SDG&E employees regarding fire season status. During these defined periods, the following SDG&E substation related activities present an elevated risk of ignition and caution would be used during performance of any of these activities:

- Operation of generators, pumps, two-cycle motors or other equipment capable of producing sparks or ample exhaust heat to cause ignition;
- Working on energized electrical equipment or facilities; and
- Smoking.

During Red Flag warnings, substation operations would follow direction of SDG&E Grid Operations.

Substation Fire Safety Protocols

Prior to substation energization, the SDG&E Fire Coordinator would meet with local fire agencies and review substation safety protocol. If in the event of a fire or substation incident, the following steps would be taken:

1. The SDG&E Control Center that has operational jurisdiction of the substation will take the lead for actions and responsibilities (Grid Ops. for transmission substations or Distribution Ops. for distribution substations).
2. The SDG&E Control Center will call the Local Fire Department and inform the Fire Department (FD) of the possibility that substation equipment is on fire and instruct the FD not to enter the substation until told it is safe to do so and escorted in by qualified SDG&E personnel at the site. The Control Center will call the SDG&E On-duty Fire Coordinator and initiate response of the SDG&E Industrial Fire Brigade (IFB) if deemed appropriate.
3. The SDG&E Control Center will have the SDG&E on-scene Qualified Electric Worker (QEW) evaluate the situation and instruct them to insure the public is appropriately clear of the area. (If substation is unoccupied, Control Center will initiate a response by qualified substation personnel and/or Electric Troubleshooters) The QEW will meet the FD and escort them into facility once facility is safe to do so.
4. The SDG&E Control Center will request assistance for traffic and crowd control in proximity of the substation to ensure public safety if required. They will instruct Law Enforcement (LE) not to enter the substation until determined it is safe to do so by SDG&E personnel at the site.
5. SDG&E's On-Duty Fire Coordinator can serve as a liaison with the fire agencies and SDG&E IFB. The on-scene QEW, Fire Coordinator, and IFB Supervisor will work with FD to establish positive command and control for the incident using Incident Command System (ICS) principles (Including a single point of contact (POC) for all SDG&E personnel and equipment). The Incident Commander (IC) will be determined and identified to all incident participants.
6. The SDG&E POC will inform the FD and/or LE of hazardous materials in the facility such as dangerous gases from burning oil, insulation, chemicals, and lead acid batteries. They will also inform of other hazards unique to that facility. If a pre-emergency response plan is available for the facility they will obtain it and provide to the IC.
7. The SDG&E IFB will respond with the foam Firefighting trailer and accessories.

2.3.1.4 Access Gates and Driveways

Access to the Capistrano Substation site is currently provided through two driveways located along Camino Capistrano. The northern driveway would be abandoned and replaced with sidewalk. A new 30-foot-wide driveway (Figure 2-4) would be constructed approximately 100-feet north of the existing driveway location. The location of the southern driveway would not change, but it would be widened to 30 feet. Locked access gates would be installed for both driveways. The access gates would consist of two approximately 8-foot-tall by 15-foot-wide wrought-iron style gates and barbed wire at the top.

2.3.1.5 Lighting and Landscaping

Lighting would be installed within each terraced pad area, but lights would not be left on continuously. Lights would only be used for nighttime substation inspection and maintenance. LED lighting would be used at entry gates, and LED lighting would be used for other substation lighting needs. The types of control shelter and dead-end structure lighting installed may vary. All lights would be shielded and aimed downward. The applicant would implement a landscaping design that would incorporate input from the City of San Juan Capistrano and local residents.

2.3.1.6 Restroom Facilities

The proposed project would not involve the installation of restroom facilities, a septic tank, or a wastewater disposal system. Portable toilets would be provided at the proposed substation site for use by construction workers and would be maintained by a licensed sanitation contractor. The licensed contractor would dispose of the waste at an offsite location and in a manner compliant with all applicable laws and regulations.

2.3.1.7 Seismic Design

The proposed substation would be designed and constructed to resist the effects of earthquake motions in accordance with the requirements of the California Building Code (CBC) and the Institute of Electrical and Electronics Engineers (IEEE) Standard 693, "Recommended Practice for Seismic Design of Substations" using the site specific seismic design parameters listed in the 2014 Update Geotechnical Investigation (Geosyntec 2014).

2.3.2 Talega Substation Modifications

The proposed changes within and adjacent to Talega Substation would involve replacing and installing new transmission poles and installing new underground conduit to accommodate the modification of two 230-kV transmission lines. Line TL23007 from San Onofre switchyard[11] would no longer connect to Talega Substation. It would enter the Talega Hub area and then proceed directly to the proposed San Juan Capistrano Substation (Figure 2-1). Line TL23030 from the applicant's Escondido Substation would still connect to Talega Substation, but the connection would be reconfigured such that a new 230-kV line from the same TL23030 source in Escondido would exit Talega Substation and proceed to the proposed San Juan Capistrano Substitution. Further information about these modifications is provided below under the discussion of Segment 4 in Section 2.3.3.1, "Proposed Transmission Line Segments."

[11] The San Onofre switchyard is still energized and serves as an interconnect point for electrical power from sources other than the retired San Onofre Nuclear Generating Station.

2.3.3 New Transmission and Distribution Lines

Approximately 9.6 miles of transmission lines would be installed and approximately 6 miles of distribution lines would be installed (Table 2-3). Approximately 1.9 miles of new underground conduit would be installed. A series of map sheets showing each of the proposed transmission and distribution line segments is provided in Appendices C and D.

2.3.3.1 Proposed Transmission Line Segments

The proposed transmission lines are organized according to the linear segments listed below and shown in Table 2-3 and Figure 2-1. Each of the transmission line segments is shown in more detail in Appendix C.

Segment 1a: 138-kV West-Side Getaways

Segment 1a would originate on the west side of the proposed San Juan Capistrano Substation and would be approximately 1,050-feet long (Table 2-3). It would be located within the city of San Juan Capistrano.

138-kV Transmission Lines (West-Side Getaways)

Along Segment 1a, four of the six 138-kV transmission lines (TL13833, TL13834, TL13837, and TL13847) proposed to connect to the new 138-kV facilities at the proposed San Juan Capistrano Substation would exit the substation in new underground conduit installed west under Camino Capistrano to four new steel cable-riser poles (proposed poles No. 1a, 2a, 4a, and 5a; Figure 2-1). One additional steel pole (proposed pole No. 3a) would be installed west of the proposed substation adjacent to the existing railway line to support a 138-kV transmission line (TL13837) that would connect overhead to proposed pole No. 5a. Four concrete 138-kV splice vaults would be installed underground west of the proposed substation within the applicant's existing ROW. Existing steel and wood 138-kV utility poles would be removed. The four lines would continue in overhead positions from proposed poles No. 1a through 4a (Figure 2-1).

TL13837 and TL13847 would be installed in new underground conduit west of Camino Capistrano prior to transitioning upward on proposed poles No. 1a and 2a on the east side of Avenida de la Vista. The underground conduit would be located within the applicant's existing ROW but installed underground. The existing lines, which would be replaced, are overhead. The remaining two of the six proposed 138-kV transmission lines would exit overhead from the east side of the proposed substation (Segment 1b).

Segment 1b: Double-Circuit 230-kV Transmission Line and 138-kV East-Side Getaways

Segment 1b would originate on the east side of the proposed San Juan Capistrano Substation and would be approximately 2.71-miles long (Table 2-3). It would be located in the city of San Juan Capistrano within the applicant's existing 150-foot-wide ROW. Segment 1b would be installed overhead on new double-circuit structures across Serra Park and then continue overhead across I-5 to Rancho Viejo Road. It would continue overhead southwest of the proposed substation along new double-circuit structures installed within the applicant's existing ROW to Via Pamplona on the border of the Rancho San Juan residential development where two single-circuit steel cable-riser poles would be installed (proposed poles No. 16 and 17). In addition, one 138-kV steel cable-riser pole (proposed pole No. 8a) would be installed, and one cable-riser pole (Z203018) would be removed.

Table 2-3 Proposed Transmission and 12-kV Distribution Line Segments and Lengths

Segment/Location	Line Numbers (Lengths)		Total Length	Existing Underground Conduit [a.]	New Underground Conduit [a.]
Transmission Line Segments					
Segment 1a: 138-kV Getaways West of San Juan Capistrano Substation	TL13833	446 feet	138-kV = 2,825 feet [b.]	—	400 feet 1,400 feet
	TL13834	730 feet			
	TL13837	1,006 feet			
	TL13847	643 feet			
Segment 1b: Double-Circuit 230-kV Transmission Line and 138-kV Getaways East of San Juan Capistrano Substation to Vista Montana Road	TL13816	274 feet	138-kV = 274 feet 230-kV = 14,235 feet	—	—
	TL23007 /TL23030	14,235 feet			
Segment 2: Underground 230-kV Transmission Lines Along Vista Montana Road	TL23007	1,754 feet [e.]	230-kV = 3,597 feet	1,754 feet	1,843 feet
	TL23030	1,843 feet			
Segment 3: Double-Circuit 230-kV Transmission Line South of Vista Montana Road	TL23007 / TL23030	22,755 feet	230-kV = 22,755 feet	—	—
Segment 4: Talega Hub/Corridor 230-kV, 138-kV, and 69-kV Transmission Lines	TL695	4,142 feet	69-kV = 4,142 feet 138-kV = 4,104 feet 230-kV = 3,550 feet	—	400 feet
	TL13812 /	1,901 feet			950 feet [c.]
	TL13836 / TL13846	2,203 feet			500 feet [c.]
	TL23007	709 feet			—
	TL23030	2,841 feet			—
Transmission Line Segment Totals			69-kV = 4,142 feet (0.78 miles) 138-kV = 7,203 feet (1.36 miles) 230-kV = 44,137 feet (8.36 miles) **Total = 10.50 miles**	**1,754 feet (0.33 miles)**	**5,493 feet (1.04 miles)**

Table 2-3 Proposed Transmission and 12-kV Distribution Line Segments and Lengths

Segment/Location	Line Numbers (Lengths)	Total Length	Existing Underground Conduit [a.]	New Underground Conduit [a.]
12-kV Distribution Line Segments				
12-kV Segment A: Getaways West of San Juan Capistrano Substation	Circuits 195, 196, 197, 313, 314, 315 and 799 [b.]	927 feet [c.]	—	— [a.]
12-kV Segment B: South and East of San Juan Capistrano Substation	Circuits 196, 197, and 315	1,919 feet	—	2,000 feet
12-kV Segment C: Across Interstate 5	Circuit 315	538 feet [c.]	—	—
12-kV Segment D: Rancho Viejo Road (New Underground Conduit)	Circuit 315	318 feet	—	250 feet
12-kV Segment E: Rancho Viejo Road (Existing Underground Conduit)	Circuit 315	3,528 feet	3,500 feet	—
12-kV Segment F: State Route 74	Circuit 315, existing conduit and conductor	12,561 feet	12,561 feet	—
12-kV Segment G: La Pata Avenue (Underground)	Circuit 315	324 feet	300 feet	—
12-kV Segment H: La Pata Avenue (Overhead)	Circuits 315 [d.]	6,069 feet	—	—
12-kV Segment I: La Pata Avenue to Vista Montana (Underground)	Circuit 315 [d.]	1,934 feet	2000 feet	—
12-kV Segment J: Removal of Underground Distribution Line	Circuit 1242	608 feet	700 feet	—
~~12-kV Segment K: La Pata Avenue (No Work. Existing Underground Conductor in Conduit)~~	~~Circuit 315~~	~~660 feet~~	~~600 feet~~	—
~~12-kV Segment L: La Pata Avenue to Prima Deschecha Landfill (Overhead)~~	~~Circuit 315~~	~~1,427 feet~~	—	—

Table 2-3 Proposed Transmission and 12-kV Distribution Line Segments and Lengths

Segment/Location	Line Numbers (Lengths)	Total Length	Existing Underground Conduit [a.]	New Underground Conduit [a.]
12-kV Segment M: Talega Hub to Talega Substation TL 695 Underbuild Relocation	Circuit 204 (underbuild on TL695)	4,142 feet	—	—
12-kV Distribution Line Segments Total		**~~34,955~~32,868 feet (6.~~62~~22 miles)**	**~~19,661~~19,001 feet (3.~~72~~60 miles)**	**2,250 feet (0.43 miles)**
Transmission and Distribution Lines Combined Total		**~~90,437~~88,350 feet (~~17.12~~ 16.73miles)**	**~~4.05~~3.93 miles**	**1.47 miles**

Source: SDG&E 2012b
Key: kV = kilovolt
Notes:
a. Does not include new or existing underground conduit within the footprint of the proposed substation site.
b. The seven 12-kV distribution lines that would extend from the proposed San Juan Capistrano Substation (12-kV Segment A) would be installed within the underground conduit proposed for the 138-kV transmission lines (Segment 1a).
c. Distance approximated using Google Earth (Google 2011).
d. The 12-kV distribution line would connect to existing conductor located in existing underground conduit.
e. The proposed Circuit 315 route would be collocated with Circuit 1242, which is an existing 12-kV circuit strung overhead on single-circuit distribution line poles and underground in conduit along La Pata Avenue.

The proposed 230-kV transmission lines would exit the 230-kV facilities at the proposed San Juan Capistrano Substation on two new steel poles and one new double-circuit steel pole (Nos. 1 to 3; Figure 2-1). Segment 1b of the new 230-kV transmission line would extend from the proposed substation to Vista Montana Road, which is located south of San Juan Hills High School and north of the Rancho San Juan residential development. Along the proposed route, a number of new double-circuit steel poles would be installed and existing wood and steel structures removed. The new 230-kV poles would be installed adjacent to or near the existing 138-kV transmission line poles.

138-kV Transmission Lines (East-Side Getaways)

Two 138-kV transmission lines (TL13816 and TL138XX [number to be defined during final engineering]) would exit the proposed San Juan Capistrano Substation overhead from two new steel cable-riser poles (Nos. 6a and 7a) that would be installed in the northeast corner of the proposed substation site (Figure 2-1). Existing wood poles and lattice steel structures would be removed.

Vertical Concrete Pipe Segment at Proposed Pole Site No. 6

At proposed pole site No. 6, a vertical concrete pipe protrudes from the ground immediately adjacent to the existing lattice steel tower. The segment of pipe that shows aboveground is less than 6-feet tall. The lattice steel tower would be removed and replaced with pole No. 6. The concrete pipe would not be removed. The applicant is unaware of the purpose of the concrete pipe and assumes that it is an old irrigation line vent pipe for a citrus orchard that was located on Honeyman Ranch prior to widespread residential development in the area. The applicant consulted with the City of San Juan Capistrano Utilities Department and found that there are no recorded water company easements at this location.

Segment 2: Underground 230-kV Transmission Lines (Vista Montana Road)

Segment 2 would be approximately 1,900-feet long (Table 2-3). Along Segment 2, two 230-kV transmission line (TL23007 and TL23030) segments would be installed within Vista Montana Road between Via Pamplona and La Pata Avenue in existing ROW and franchise position. One segment would be installed on the northern side of Vista Montana Road, and one segment would be installed on the southern side. The length of existing and new conduit required is presented in Table 2-3. The new trench package would include conduit for new fiber optic communications lines that would be associated with the applicant's proposed system (Figure 2-6). Four underground 230-kV concrete splice vaults would be installed.

Segment 3: Double-Circuit 230-kV Transmission Line (South to Talega Hub)

Segment 3 would be approximately 4.3-miles long (Table 2-3) and located within the cities of San Juan Capistrano and San Clemente and within unincorporated Orange County. New 230-kV cable riser poles would be installed to transition the underground conductor from Segment 2 to an overhead position (poles No. 16 to No. 19). Wood pole and wood H-frame 138-kV transmission line structures would be removed, and 230-kV steel transmission line poles would be installed (proposed poles No. 18 to No. 41) south of Vista Montana Road to Talega Hub (Figure 2-1).

Segment 4: Talega Hub/Corridor 230-kV, 138-kV, and 69-kV Transmission Lines

Segment 4 would include the removal, relocation, and installation of 230-kV, 138-kV, and 69-kV transmission lines. Combined, the length of the transmission line work proposed within Segment 4 would be approximately 2.2 miles (Table 2-3).

230-kV Transmission Lines

One single-circuit 230-kV transmission line (TL23007, Table 2-1) would be disconnected from Talega Substation and rerouted approximately 600 feet to the proposed 230-kV transmission line route to the proposed San Juan Capistrano Substation (Table 2-3 and Figure 2-1). Steel dead-end poles would be installed (proposed poles No. 42 and No. 43) that would connect to an existing lattice steel tower within the Talega Hub area. TL23007 originates at the San Onofre switchyard.

A second single-circuit 230-kV transmission line (TL23030), which currently extends from the applicant's Escondido Substation north to Talega Substation, would be extended by approximately 0.5 miles from the east side of Talega Substation west through Talega Corridor to the Talega Hub area. From the Talega Hub area, TL23030 would be routed along the proposed 230-kV transmission line route to the proposed San Juan Capistrano Substation. TL23030 would be installed on proposed poles No. 44 through No. 49. Pole No. 49 would replace an existing 230-kV dead-end pole. TL23030 would remain connected to Talega Substation, creating a transmission line with three terminals (Escondido, Talega, and San Juan Capistrano Substations).

138-kV and 69-kV Transmission Lines

TL13812

A new approximately 0.35-mile segment of TL13812[12] would be extended to Talega Substation on new double-circuit transmission line structures. From proposed pole Nos. 15a and 16a (Figure 2-1), the 138-kV lines would transition to a underground position and extend to proposed pole Nos. 17a and 18a in new underground conduit. The 138-kV line would be installed underground to allow for construction of the proposed 230-kV transmission line (TL23007). The line would transition to an overhead position at proposed pole Nos. 17a and 18a and then extend overhead to proposed pole Nos. 19a, 20a, and 21a into Talega Substation. From there, TL13812 would transition to an underground position. Approximately 250 feet of the new 0.35-mile double-circuit 138-kV segment would be installed in new underground conduit within the Talega Hub/Corridor area, and approximately 700 feet would be installed in new underground conduit within Talega Substation. Two 138-kV splice vaults would be installed underground.

TL13836 and TL13846

Existing lines TL13836 and TL13846 currently enter the Talega Hub in an overhead position from the west. At proposed pole Nos. 9a and 10a (Figure 2-1), the lines would be relocated to underground positions and then transition back to overhead positions at proposed pole Nos. 11a and 12a. They would be installed underground to allow for construction of the proposed overhead 230-kV line (TL23030) on pole Nos. 42 and 44. From poles 11a and 12a, TL13836 and TL13846 would transition to overhead positions and continue overhead to proposed pole Nos. 13a, 14a, and 23a, where they would terminate within Talega Substation. The new double-circuit 138-kV transmission line would be approximately 0.42-miles long. Approximately 450 feet would be installed in new underground conduit

[12] Prior to application submittal, the applicant's 138-kV line TL13812 connected San Mateo Substation to Talega Substation. No other substations were connected to this line. To avoid potential overload conditions, the applicant altered the configuration of line TL13812 in 2013 by installing two tap points, thus creating the San Mateo–Talega–Pico 138-kV (TL13846) and San Mateo–Talega–Laguna Niguel 138-kV (TL13835) lines. Because of the tap installations, the identification number TL13812 is not applicable to the applicant's South Orange County 138-kV system configuration at this time. For the purposes of this Environmental Impact Report (EIR), however, the identification number TL13812 is retained because it would be applicable to the system configuration if the proposed project is constructed.

within the Talega Hub/Corridor area. The identification number of the new 230-kV line segment created between Talega Hub and San Juan Capistrano substations would be TL23007.

TL695

One approximately 0.8-mile segment of a 69-kV transmission line (TL695) would be relocated. The relocated 69-kV segment of TL695 would extend overhead approximately 0.8 miles west/southwest of Talega Substation. Approximately 400 feet of the new 69-kV segment would be installed in new underground conduit within the Talega Hub/Corridor area to allow for construction of the proposed 230-kV transmission line (TL23007). One new 69-kV underground splice vault would be installed.

2.3.3.2 Proposed 12-kV Distribution Line Segments

The proposed distribution lines are organized according to the linear segments listed below and shown in Table 2-3 and Figure 2-2. Each of the 12-kV segments are shown in more detail in Appendix D.

12-kV Segment A: Getaways (West Side, Underground)

Segment A would be approximately 930-feet long. Circuits 195, 313, 314, and 799 would be installed in the new underground conduit proposed for the 138-kV getaways out of the west side of the proposed substation (see Segment 1a in Section 2.3.3.1, "Proposed Transmission Line Segments"). Two of the circuits would exit the underground conduit to the north to a new cable-riser pole (proposed pole No. D1) and then continue overhead on existing structures, and two circuits would exit the underground conduit to the west and then continue overhead on existing structures.

12-kV Segment B: Circuits 196, 197, and 315 (New Underground Conduit)

Segment B would be approximately 1,900-feet long. From the proposed San Juan Capistrano Substation, Circuits 196, 197, and 315 would be installed in new underground conduit south along Camino Capistrano and cross Calle Bonita. These circuits would continue in new underground conduit along Calle Bonita to Calle Santa Rosalia (approximately 1,000 feet total after exiting the substation property). From there, the three 12-kV circuits would continue north for approximately 400 feet underground along Calle Santa Rosalia. From a position near the northwest corner of Serra Park, the three 12-kV circuits would be installed east toward I-5 along the park's northern border for approximately 600 feet (Figure 2-2). Two new steel cable-riser poles (proposed pole Nos. D2 and D3) would be installed at the northeast corner of the park to carry the three 12-kV circuits across I-5 (see 12-kV Segment C).

Circuits 196 and 197 are currently routed overhead on distribution line structures from Capistrano Substation east across Calle Santa Rosalia and along the southern border of Serra Park and cross I-5. Circuit 315 currently exits east from Capistrano Substation on the lower sections of existing 138-kV structures and crosses I-5. Five existing 12-kV distribution line structures from Capistrano Substation that cross Serra Park along the park's southern border would be removed.

Serra Park

Construction of this segment would take approximately 6 weeks, requiring a 6-week closure of Serra Park. Heavy equipment and vehicles would be set up in the park during construction. ~~In addition, partial closure of roads in proximity to Serra Park and the proposed substation site would be closed, or traffic would be diverted to allow for full road closure.~~

12-kV Segment C: Across Interstate 5 (Overhead)

Segment C would be approximately 900-feet long. From the northeast corner of Serra Park, Circuits 196, 197, and 315 would be installed overhead on new cable-riser poles (proposed pole Nos. D2 and D3). The existing utility pole that supports Circuits 196 and 197 would be removed. The three circuits would then extend overhead across I-5 for approximately 500 feet to new cable-riser poles (proposed pole Nos. D4 and D5) installed on the west side of Rancho Viejo Road (Figure 2-2).

12-kV Segment D: Rancho Viejo Road (New Underground Conduit)

Segment D would be approximately 300-feet long. From proposed pole Nos. D4 and D5, Circuit 315 would be installed in new underground conduit south on Rancho Viejo Road (Figure 2-2). The continuation of Circuits 196 and 197 north of proposed pole Nos. D4 and D5 is no longer considered part of the proposed project from this point, as these circuits would connect to existing conductor located within existing underground conduit from this point.

12-kV Segment E: Rancho Viejo Road (Existing Underground Conduit)

Segment E would be approximately 3,500-feet long. Circuit 315 would interconnect from new to existing underground conduit approximately 200 feet away from proposed pole Nos. D3 and D4 on Rancho Viejo Road (Figure 2-2) and extend underground to the intersection of Rancho Viejo Road and State Route 74 (SR-74). No trenching would be required.

12-kV Segment F: State Route 74 (Existing Underground Conduit)

Segment F would be approximately 2.4-miles long. Circuit 315 would connect to existing conductor that extends in underground conduit from the intersection of Rancho Viejo Road and SR-74 east to La Pata Avenue (Figure 2-2). No trenching would be required.

12-kV Segment G: La Pata Avenue (Existing Underground Conduit)

Segment G would be approximately 300-feet long. Circuit 315 would be installed in existing underground conduit within La Pata Avenue to a new cable-riser pole (Figure 2-2). Two cable-riser poles (proposed pole Nos. D6 and D7) would be installed at this location. An existing distribution line pole would be replaced.

12-kV Segment H: La Pata Avenue (Overhead)

Segment H would be approximately 1.15-miles long (Figure 2-2). Circuit 315 would be collocated with existing Circuit 1242 on new double-circuit 12-kV distribution poles that would be constructed as part of the La Pata Avenue Gap Closure and Camino Del Rio Extension Project (see Project O1 in Table 6-1). The new distribution poles would be installed in close proximity to the existing wood distribution line poles, which would be removed. Circuits 315 and 1242 would transition into existing underground conduit on two new cable-riser poles (proposed pole Nos. D29 and D30) approximately 1,000 feet north of the intersection of La Pata Avenue and Vista Montana Road.

12-kV Segment I: La Pata Avenue to Vista Montana Road (Existing Underground Conduit)

Segment I would be approximately 1,900-feet long. Circuit 315 would transition underground into existing underground conduit and continue south along La Pata Avenue for approximately 1,000 feet to Vista Montana Road. Circuit 315 would then extend approximately 1,000 feet west on Vista Montana Road (Figure 2-2).

12-kV Segment J: Removal of Underground Distribution Line

In Segment J, approximately 600 feet of underground 12-kV distribution line (a section of the existing Circuit 315 that extends from Capistrano Substation to Vista Montana Road) would be removed from existing underground conduit.

~~12-kV Segment K: La Pata Avenue (Existing Underground Conductor Used)~~

~~Segment K would be approximately 700-feet long. South of the intersection of La Pata Avenue and Vista Montana Road, Circuit 315 would connect to an existing conductor cable in underground conduit. No trenching would be required. Three wood distribution line poles would be removed.~~

~~12-kV Segment L: La Pata Avenue to Prima Deschecha Landfill (Overhead)~~

~~Segment L would be approximately 1,400-feet long (Figure 2-2). Circuit 315 would rise up an existing cable-riser pole and extend south toward Prima Deschecha Landfill along La Pata Avenue on existing structures that would be constructed as part of the La Pata Avenue Gap Closure and Camino Del Rio Extension Project (see Project O1 in Table 6-1).The existing Circuit 315 and supporting structures would be removed, and seven new steel distribution poles would be installed. The new poles would be installed in close proximity to the existing wood distribution line poles that would be removed.~~

12-kV Segment M: Talega Hub and Substation (TL695 Underbuild)

Segment M would be approximately 1,200-feet long. Circuit 204 is currently underbuilt on TL695 transmission structures. Circuit 204 would be relocated to the proposed TL695 structures (proposed pole Nos. 1b through 10b) from the Talega Hub to the Talega Substation Entry Road. Circuit 204 is no longer needed to connect into Talega substation so interconnecting to existing underground facilities will not be unnecessary.

2.3.3.3 Existing and Proposed Transmission Line Structures

The proposed 230-kV and 138-kV transmission line poles would be steel, range in height from 80 to 160 feet, and be 4-feet to 6-feet wide (Tables 2-4 and 2-5, Figures 2-5a, 2-5b, and 2-5c). The proposed 69-kV and 12-kV poles would be steel, range in height from 50 to 80 feet, and be 3-feet to 4-feet wide. Along the proposed 230-kV transmission line route, the 230-kV poles would be spaced between 600 feet and 2,000 feet apart, depending on the topography.

Table 2-4 Existing and Proposed Structure Numbers, Types, and Heights

Existing Structure Height (feet)	Existing Type	Proposed Structure Number	Proposed Height (feet)	Proposed Type
TL Segment 1a (16 removed and 7 installed)				
65.5	138-kV WP	1a	~~125~~95	138-kV CRP/DE
70.0	138-kV DE	2a	~~125~~110	138-kV CRP/DE
77.5	138-kV DE	—	—	—
70.5	138-kV WP	—	—	—
74.5	138-kV WP	—	—	—
81.7	138-kV WP	3a	85	138-kV CRP/DE
74.5	138-kV WP	4a	95	138-kV CRP/DE
—	—	5a	~~90~~95	138-kV CRP/DE
79.0	138-kV WP	—	—	—
81.0	138-kV WP	—	—	—

Table 2-4 Existing and Proposed Structure Numbers, Types, and Heights

Existing Structure Height (feet)	Existing Type	Proposed Structure Number	Proposed Height (feet)	Proposed Type
70.0	138-kV WP	—	—	—
74.5	138-kV WP	—	—	—
70.0	138-kV WP	—	—	—
65.5	138-kV WP	—	—	—
56.5	138-kV WP	—	—	—
74.5	138-kV WP	—	—	—
70.0	138-kV DE	—	—	—
—	—	6a	~~90~~115	138-kV CRP/DE
—	—	7a	~~90~~115	138-kV CRP/DE
12-kV Segment A (0 removed and 1 installed)				
—	—	D1	60	CRP
TL Segment 1b (19 removed and ~~18~~17 installed)				
—	—	1	~~80~~95	230-kV DE
—	—	2	~~80~~ 95	230-kV DE
70.0	138-kV WP	—	—	—
70.0	138-kV WP	—	—	—
90.0	138-kV LST/DE	3	120	230-kV DE
100.0	138-kV LST/DE	4	~~120~~135	230-kV DE
115.0	138-kV LST/DE	5	~~120~~130	230-kV DE
135.0	138-kV LST/DE	6	~~140~~145	230-kV TGT
135.0	138-kV DE	7	155	230-kV ~~TGT~~DE
90.0	138-kV DE	8	~~110~~120	230-kV ~~TGT~~DE
90.0	138-kV DE	9	~~130~~140	230-kV DE
100.0	138-kV DE	10	~~110~~155	230-kV DE
56.5	138-kV WP/3DE	11	~~110~~135	230-kV TGT
56.5	138-kV WP/H-frame	12	~~145~~150	230-kV TGT
52.0	138-kV WP/H-frame	—	—	—
65.5	138-kV WP/H-frame	13	~~145~~165	230-kV TGT
52.0	138-kV WP/H-frame/DE	—	—	—
125.0	138-kV DE	14	~~160~~168	230-kV DE
115.0	138-kV DE	15	~~135~~168	230-kV DE
95.0	138-kV CRP/DE	16	160	230-kV CRP/DE
		17	160	230-kV CRP/DE
103.0	138-kV CRP/DE	~~8a~~	~~90~~	~~138-kV CRP/DE~~
12-kV Segment B (5 removed and 0 installed)				
Estimated that five distribution structures would be removed across the southern section of Serra Park. Additional details not provided.				
12-kV Segment C (0 removed and 4 installed)				
—	—	D2	80	12-kV CRP
—	—	D3	80	12-kV CRP
—	—	D4	80	12-kV CRP
—	—	D5	80	12-kV CRP
12-kV Segments D to G (0 removed and 0 installed)				
12-kV Segment H (4 removed and 5 installed)				
—	—	D7	60	12-kV CRP
50.0	12-kV WP	D8	55	12-kV DP
50.0	12-kV WP	D9	55	12-kV DP
50.0	12-kV WP	D10	55	12-kV DP

Table 2-4 Existing and Proposed Structure Numbers, Types, and Heights

Existing Structure Height (feet)	Existing Type	Proposed Structure Number	Proposed Height (feet)	Proposed Type
50.0	12-kV WP	D11	55	12-kV DP
~~12-kV Segments I to K (3 removed and 0 installed)~~				
~~12-kV Segment L (0 removed and 0 installed)~~				
TL Segment 2 (0 removed and 0 installed)				
TL Segment 3 (31 removed and ~~24~~23 installed)				
95.0	138-kV CRP/DE	18	160	230-kV CRP/DE
		19	160	230-kV CRP/DE
—	—	~~20~~	~~120~~	~~230-kV DE~~
56.5	138-kV WP/H-frame/DE	—	—	—
56.5	138-kV WP/H-frame	21	~~120~~135	230-kV TGT
56.5	138-kV WP/H-frame	22	~~125~~120	230-kV TGT
52.0	138-kV WP/H-frame			
61.0	138-kV WP/H-frame	23	155	230-kV TGT
56.5	138-kV WP/H-frame	—	—	—
65.5	138-kV WP/H-frame	24	~~155~~165	230-kV TGT
61.0	138-kV WP/H-frame	25	~~140~~155	230-kV TGT
65.5	138-kV WP/H-frame/DE	—	—	—
52.0	138-kV WP/H-frame	26	~~140~~145	230-kV TGT
56.5	138-kV WP/H-frame	27	~~125~~135	230-kV TGT
79.0	138-kV H-frame			
79.0	138-kV H-frame	28	~~145~~115	230-kV DE
65.5	138-kV WP/H-frame	29	~~150~~115	230-kV DE
61.0	138-kV WP/H-frame	30	~~155~~115	230-kV TGT
61.0	138-kV WP/H-frame	31	~~145~~155	230-kV TGT
56.5	138-kV WP/H-frame	—	—	—
65.5	138-kV WP/H-frame	32	~~145~~150	230-kV TGT
65.5	138-kV WP/H-frame	33	~~115~~130	230-kV TGT
47.5	138-kV WP/H-frame	—	—	—
79.0	138-kV WP/3DE	34	~~140~~145	230-kV DE
56.5	138-kV WP/H-frame	35	~~105~~110	230-kV TGT
52.0	138-kV WP/3DE	36	~~95~~105	230-kV DE
61.0	138-kV WP/H-frame	37	~~115~~120	230-kV TGT
61.0	138-kV WP/H-frame	38	~~110~~125	230-kV TGT
65.5	138-kV WP/H-frame	39	~~135~~168	230-kV TGT
61.0	138-kV WP/H-frame	—	—	—
65.5	138-kV WP/H-frame	40	~~130~~120	230-kV TGT
65.5	138-kV WP/H-frame	41	~~125~~135	230-kV TGT
TL Segment 4 (39 structures removed and ~~33~~26 installed)				
135	LST/DE	—	—	—
—	—	9a	~~100~~80	138-kV CRP/DE
—	—	10a	~~100~~65	138-kV CRP/DE
—	—	11a	~~100~~75	138-kV CRP/DE
—	—	~~12a~~	~~100~~	~~138-kV CRP/DE~~
61.0	138-kV WP	—	—	—
74.5	138-kV WP	—	—	—
79.0	138-kV WP	—	—	—
79.5	138-kV WP	—	—	—
83.5	138-kV WP	—	—	—

Table 2-4 Existing and Proposed Structure Numbers, Types, and Heights

Existing Structure Height (feet)	Existing Type	Proposed Structure Number	Proposed Height (feet)	Proposed Type
52.0	138-kV WP/DE	—	—	—
65.5	138-kV WP	~~13~~15a	~~125~~100	138-KV CRP/DE
61.0	138-kV WP			
65.5	138-kV WP	—	—	—
61.0	138-kV WP	—	—	—
65.5	138-kV WP	~~14~~16a	~~115~~100	138-kV DE
74.5	138-kV WP			
65.5	138-kV WP	—	—	—
65.5	138-kV WP	~~15~~12a	~~100~~75	138-kV CRP/DE
—	—	~~16~~13a	~~100~~65	138-kV CRP/DE
—	—	~~17~~14a	~~100~~70	138-kV CRP/DE
—	—	~~18a~~	~~100~~	~~138-kV CRP/DE~~
—	—	~~19~~17a	~~105~~85	138-kV DE
—	—	~~20a~~	~~150~~	~~138-kV DE~~
—	—	~~21a~~	~~110~~	~~138-kV CRP/DE~~
—	—	~~22a~~	~~110~~	~~138-kV DE~~
—	—	~~23a~~	~~100~~	~~138-kV DE~~
52.0	138-kV WP/3DE	42	~~120~~155	230-kV DE
74.5	WP/DE	—	—	—
65.0	69-kV WP	—	—	—
74.5	138-kV WP/DE	—	—	—
		43	160	230-kV DE
52.0	69-kV WP	~~43~~44	~~135~~135	230-kV DE
80.0	138-kV WP/DE			
—	—	~~44~~45	~~150~~95	230-kV DE
74.5	69-kV WP	—	—	—
70.0	69-kV WP	—	—	—
		46	105	230-kV DE
—	—	~~45~~47	~~140~~95	230-kV DE
—	—	~~46~~48	~~120~~135	230-kV DE
—	—	~~47~~49	~~140~~125	230-kV DE
65.0	WP	~~48~~50	130	230-kV DE
100.0	230-kV DE	~~49~~	~~120~~	~~230-kV DE~~
56.5	69-kV WP/H-frame	1b	~~75~~85	69-kV /DE
56.5	69-kV WP/H-frame	2b	~~75.5~~80	69-kV CRP/DE
65.5	138-kV WP	—	—	—
70.0	138-kV WP	—	—	—
—	—	~~3b~~	~~75.5~~	~~69-kV CRP/DE~~
65.5	138-kV WP	~~4~~3b	~~56.5~~75	69-kV TGT
52.0	138-kV WP	~~5~~4b	~~75~~85	138-kV TGT
61.0	138-kV WP			
56.5	138-kV WP	—	—	—
61.0	138-kV WP	—	—	—
65.5	138-kV WP	—	—	—
—	—	~~6~~5b	~~90~~	~~69-kV DE~~
61	138-kV WP	—	—	—
—	—	~~7~~6b	~~55~~85	69-kV DE
56.5	69-kV WP	~~8~~7b	~~50~~70	69-kV DE

Table 2-4 Existing and Proposed Structure Numbers, Types, and Heights

Existing Structure Height (feet)	Existing Type	Proposed Structure Number	Proposed Height (feet)	Proposed Type
79.0	69-kV WP	~~9~~8b	~~65~~70	69-kV DE
56.5	69-kV WP	~~10b~~ [a]	~~80~~	~~69-kV CRP/DE~~
12-kV Segment M (0 removed and 0 installed) [b]				

Source: SDG&E 2012b

Key: CRP = steel cable-riser pole, DP = steel distribution pole, DE = steel dead-end structure, EIR = Environmental Impact Report, kV = kilovolt, LST/DE = lattice steel dead-end structure, TGT = steel tangent (in-line) pole, TL = transmission line, WP = wood pole, WP/CRP = wood cable riser pole, WP/3DE = three-pole wood dead-end structure, WP/DE = wood dead-end pole, WP/H-frame = H-frame structure composed of wood poles, WP/H-frame/DE = H-frame dead-end structure composed of wood poles

Notes:

[a] ~~Structure Z223778 would either be replaced with a new 69-kV steel cable-riser pole (proposed pole No. 10b) with a distribution cable-riser attachment, or a distribution cable-riser attachment would be added to the existing structure, and pole No. 10b would not be installed. For the purposes of this EIR, it is assumed that pole No. 10b would be installed and the existing structure removed.~~

[b] 12-kV Segment M would be underbuilt on proposed 69-kV poles No. 1b through ~~10~~8b.

Table 2-5 Proposed Pole Diameters

Pole Type	Approximate Diameter (feet)	
	Base	Top
230-kV Steel Cable Riser Pole or Dead-End/Tangent (in-line) Pole	5–6	2–3
138-kV Cable Riser Pole or Dead-End/Tangent (in-line) Pole	4–5	1.5–2
69-kV Cable Riser Pole or Dead-End/Tangent (in-line) Pole	3–4	1.5
12-kV Cable Riser Pole (12-kV Segment C Interstate 5 Crossing)	3–4	2
12-kV Cable Riser Pole or Dead-End/Tangent (in-line) Pole	2	2

Source: SDG&E 2012b

Key: kV = kilovolt

Although the precise number of structures to be installed and removed would be defined during final engineering, it is estimated that:

- 92 transmission and distribution line poles would be installed;
  - 82 steel transmission line poles would be installed (49 230-kV poles, 24 138-kV poles, and 9 69-kV poles); and
  - 10 steel distribution line poles would be installed;[13]
- 109 transmission and distribution line structures would be removed (92 wood poles/H-frames, 12 steel poles, and five lattice steel towers);
- 13 transmission line splice vaults would be installed;
- 10 distribution line splice vaults would be installed;
- 1 splice vault would be removed; and
- 1.9 miles of new conduit would be installed to house the proposed underground transmission and distribution lines (Table 2-3).

[13] The proposed distribution line poles would be made of weathered (weathering) steel (similar to COR-TEN steel) that is designed to blend into the background environment and does not require painting. A stable rust-like coating forms on the exterior surface of weathering steel when exposed to weather for several years.

Source: SDG&E, 2012

Existing view from Calle Saluda at Prima Desecha Trail looking northwest

Visual simulation of proposed 230-kV transmission line at proposed pole site No. 30

EE-003279-0001-04TTO.b.ai (2014 Corp Archives) 10/24/2014

Figure 2-5a

Existing and Proposed Transmission Lines

South Orange County Reliability Enhancement Project

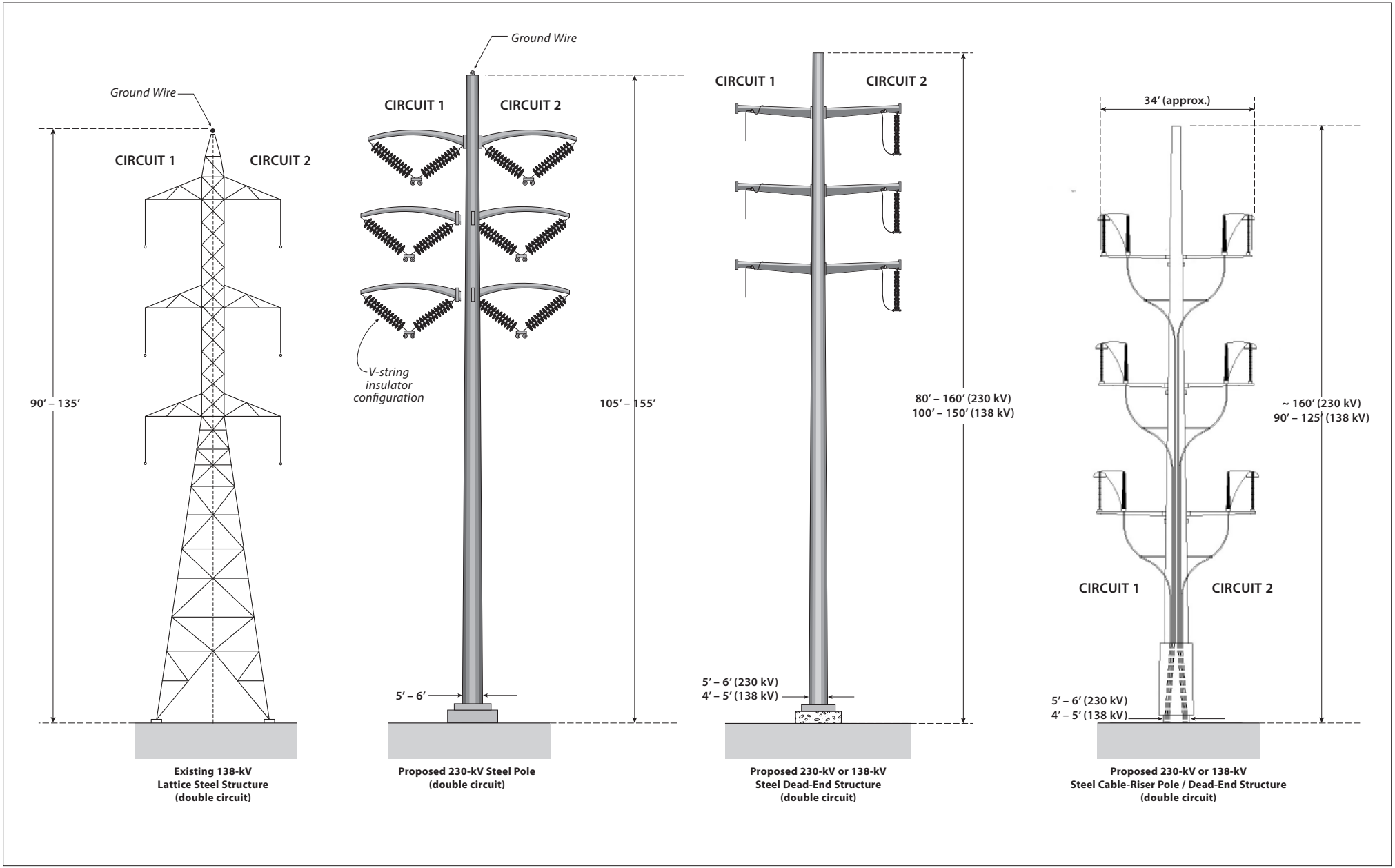

EE-003279-0001-04TTO.g.ai 10/24/2014

Figure 2-5b

Existing and Proposed 138-kV and 230-kV Structures

South Orange County Reliability Enhancement Project

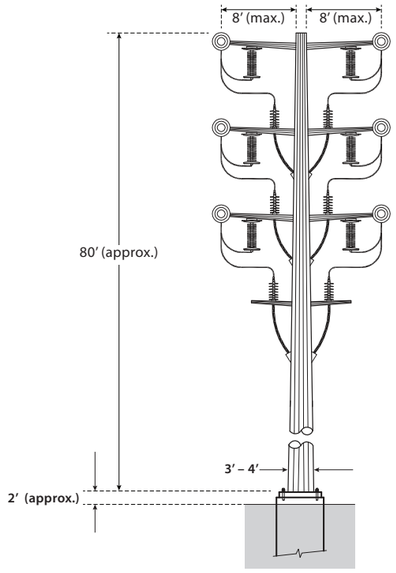

Proposed 69-kV Steel Cable-Riser Pole
(double circuit)

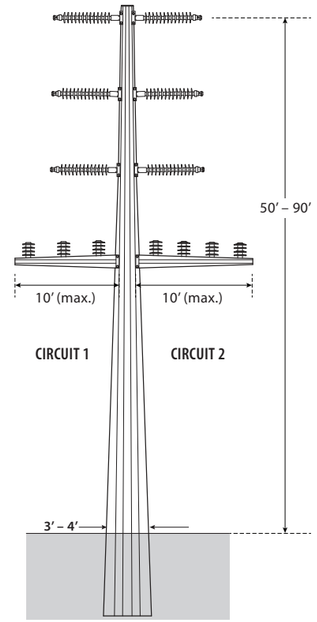

Proposed 69-kV Steel Pole with
12-kV Distribution Line Underbuild
(double circuit)

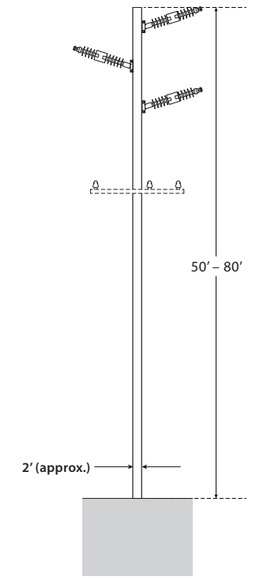

Existing 69-kV Wood Pole
(12-kV distribution line underbuild shown)

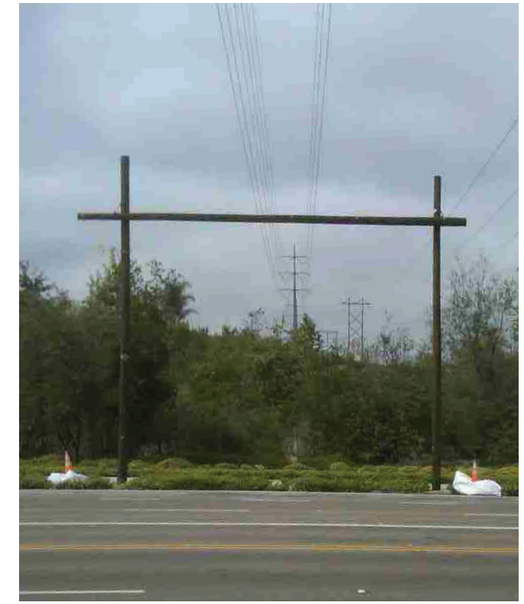

Typical H-Frame Guard Structure
(temporary, for safety during conductor installation)

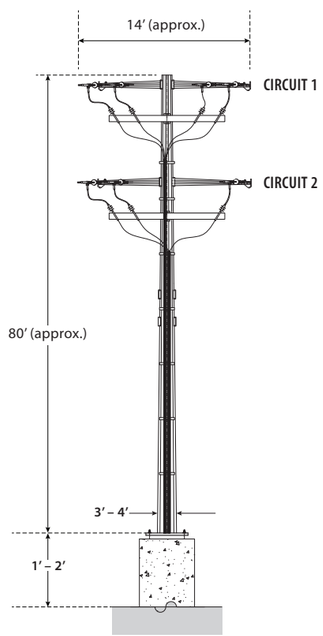

Proposed 12-kV Steel Cable-Riser Pole for
Interstate 5 Crossing (double circuit)

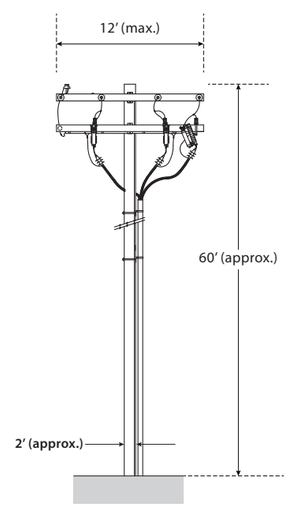

Proposed 12-kV Steel Cable-Riser Pole

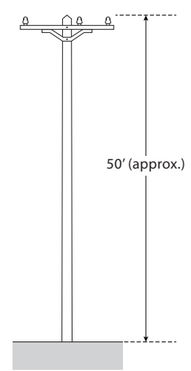

Existing 12-kV Wood Pole

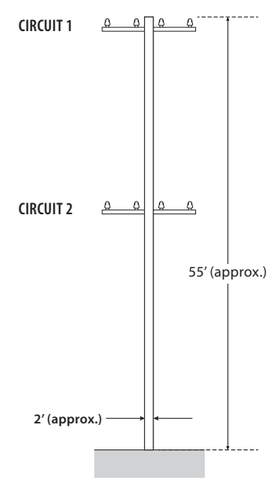

Proposed 12-kV Steel Pole
(double circuit)

NOT TO SCALE

EE-003279-0001-04TT0.h.ai 10/24/2014

Figure 2-5c **Existing and Proposed 12-kV and 69-kV Structures and Typical Guard Structure**
South Orange County Reliability Enhancement Project

The proposed conduit would be made of PVC. The term *conduit* refers to protective tubing through which transmission and distribution lines are installed. A cluster of conduit, which is typically housed together in concrete, is called a *duct bank* (Figure 2-6). The proposed splice vaults (Figure 2-6) would be made of concrete and installed along the proposed underground transmission and distribution line routes. During operations, the vaults are used to access underground cables for inspection, maintenance, and repair. The proposed duct banks and splice vaults are further discussed in Section 2.4.5.5, "Underground Installation."

2.3.3.4 Existing and Proposed Conductor and Optical Ground Wire Sizes

Overhead segments of the proposed 230-kV transmission lines would have 900-kcmil[14] aluminum conductor steel supported (ACSS)/alumoweld(AW) conductor.[15] In addition, optical ground wire (0.5-inch diameter Alumoweld shield wire with fiber optic inner core) would be strung along the tops of the proposed 230-kV structures. Overhead segments of the proposed 138-kV transmission lines would use 900-kcmil ACSS/AW conductor cables, and overhead segments of the proposed 69-kV transmission lines would use 900-kcmil ACSS/AW conductor cables. The proposed underground transmission line segments would use Cross-linked polyethylene-insulated solid-dielectric, copper-conductor cable. The proposed overhead 12-kV distribution lines would use 636-kcmil aluminum conductor steel-reinforced /alumaweld (ACSR/AW) conductor, and the underground 12-kV distribution lines would use 1,000 kcmil copper conductor cable for substation getaways up to the first manhole and 1,000 kcmil aluminum conductor cable for all other underground distribution lines.

The existing overhead 230-kV transmission line that provides power to Talega Substation uses 1033.5 kcmil ACSR/AW conductor. The existing overhead 138-kV transmission lines that would be modified as part of the proposed project use various sizes of conductor (ranging from 336 kcmil ACSR/AW to 1033.5 kcmil ACSR/AW), and the existing overhead 69-kV transmission lines use various size conductor (ranging from 336 kcmil ACSR/AW to 1033.5 kcmil ACSR/AW). The existing overhead 12-kV distribution lines that would be modified as part of the proposed project use No. 2 aluminum steel-reinforced conductor,[16] and the existing underground 12-kV distribution lines use 2/0 aluminum 1,000 kcmil conductor cable.

[14] A circular mil (cmil) is a standard unit of measure used for electrical systems that refers to the area of the cross section of larger conductor sizes. One cmil is equal to the area of a circle with a 1-mil diameter, and 1 kcmil is equal to 1,000 cmils. Large conductor sizes rated for use on electrical transmission lines are generally 0.6-inches to 2-inches in diameter. ACSS/AW 900-kcmil conductor is approximately 1.2-inches in diameter. In general, larger diameter conductor is capable of greater electrical carrying capacity than smaller diameter conductor (Grigsby 2001).

[15] ACSS conductor cable has an aluminum-coated steel core design that allows for the use of fully annealed (softened) aluminum conductor, which is capable of operating at higher temperatures and transmitting a greater amount of electricity with reduced line loss in comparison to other types of aluminum conductor, e.g., aluminum conductor steel reinforced (Southwire 2014).

[16] American Wire Gauge conductor size No. 2 has a diameter of approximately 0.3 inches (Grigsby 2001). The proposed 636-kcmil aluminum steel-reinforced conductor would be approximately 0.6 inches wider in diameter than the existing distribution line conductor and would be capable of increased electrical carrying capacity.

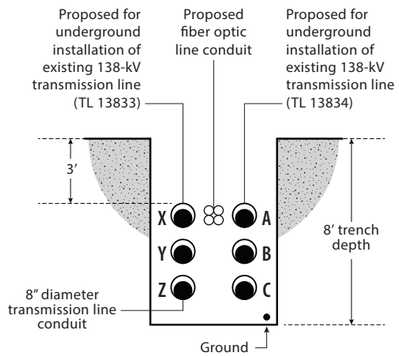

Proposed Double-Circuit Duct Bank Configuration for Transmission Line Segment 1 (Camino Capistrano)

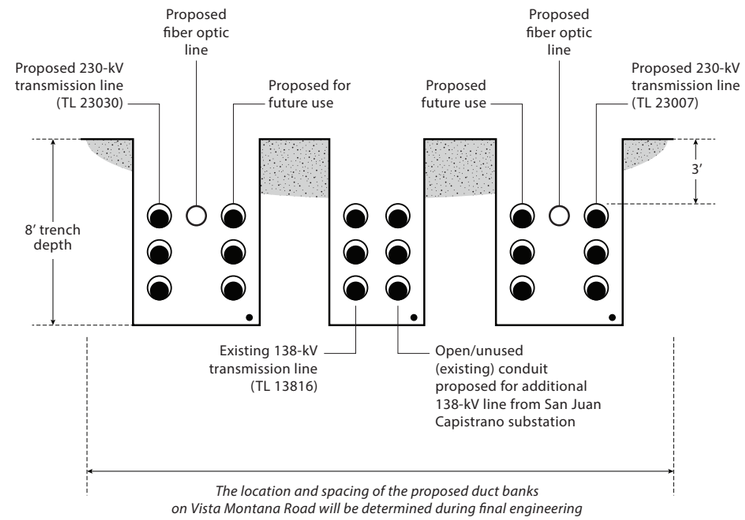

Proposed Double-Circuit Duct Bank Configurations for Transmission Line Segment 2 (Vista Montana Road)

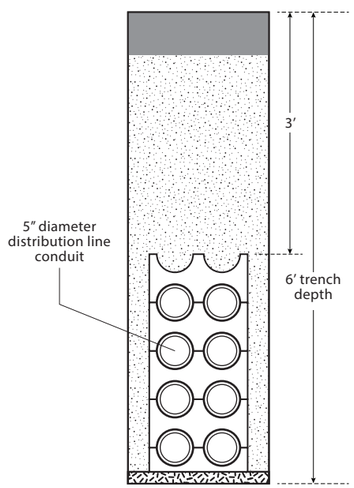

Proposed Double-Circuit Duct Bank Configuration for Underground Distribution Line Installations

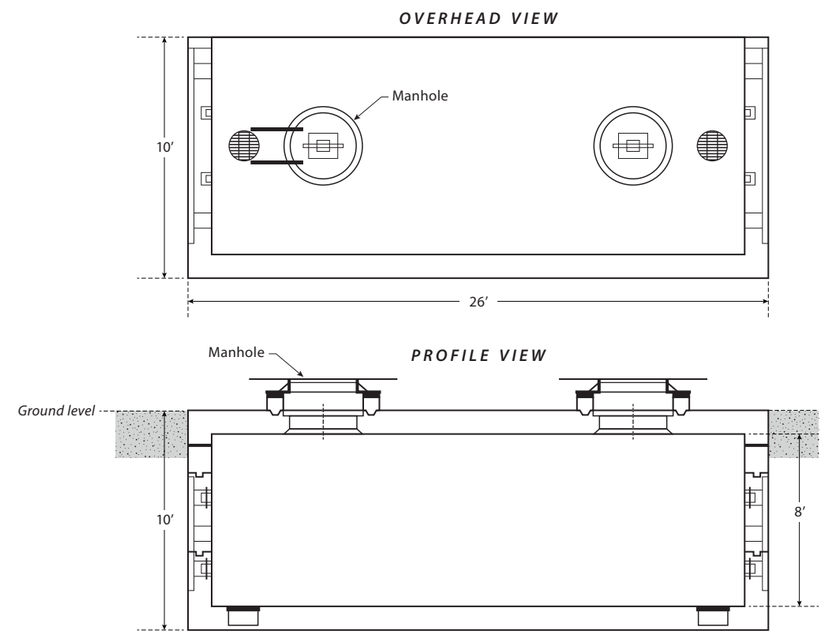

Typical Concrete Splice-Vault Configuration for Underground Transmission Lines

EE-003279-0001-04TT0.i.ai 08/12/2014

Figure 2-6

Proposed Underground Duct Bank Conduit Configurations and Splice Vaults

South Orange County Reliability Enhancement Project

2.3.4 Telecommunications

An underground AT&T telecommunications cable currently connects to Capistrano Substation. This cable would be relocated into the proposed underground duct banks (12-kV Circuits 196, 197, and 315) to be installed from San Juan Capistrano Substation south along Camino Capistrano to Calle Bonita and then east toward I-5 (12-kV Segment A, Figure 2-2). Two, 4-inch ducts would be extended from Camino Capistrano into the new 138-kV control shelter for AT&T's telecommunication line. Currently, AT&T feeds the existing substation from a telecommunication line extending from Calle Bonita. Due to the site grading required for Phase 2, this existing telecommunication line cannot be extended to the new 138-kV control shelter – therefore new conduits must be installed from Camino Capistrano. The exact location of the ducts has not yet been determined by AT&T. All SDG&E transmission and distribution duct packages would have conduit installed for SDG&E fiber telecommunication installation into the substation – no additional conduit packages would be required to bring SDG&E fiber telecommunication lines into the substation.

The applicant's two fiber optic telecommunications lines between Trabuco Substation and Capistrano Substation would be relocated into the proposed underground 138-kV getaways (Transmission Line Segment 1a, Figure 2-1). They would transition from underground to overhead with lines TL13833 and TL13834 (Table 2-1).

At Talega Substation, the applicant's fiber optic telecommunications lines are attached to structures that support TL695. The telecommunications lines extend to the existing structure located near proposed pole No. 38 (Figure 2-1). At this location, the telecommunications lines transition underground and terminate at Pico Substation. The existing telecommunications lines would be replaced by *optical ground wire*[17] installed along the tops of the proposed 230-kV structures and fiber optic telecommunications lines installed within the underground conduit proposed for Transmission Line Segment 2, within the proposed San Juan Capistrano Substation site, and within the Talega Hub/Corridor and Talega Substation site (Figure 2-1).

2.3.5 Rights-of-Way

The applicant's easement within the transmission corridor between Talega Substation and Capistrano Substation was acquired in the 1960s. Southern California Edison owns and operates four 220-kV transmission lines within the same transmission corridor. The average width of the applicant's easement within the corridor is 150 feet. The applicant owns the Capistrano Substation property and has easements for Talega Substation and the areas west of Talega Substation called Talega Corridor and Talega hub (Figure 2-1).

2.3.5.1 New Rights-of-Way

The applicant estimates that a total of approximately ~~9.97~~2.07 acres of new ROW along 0.~~3~~5 mile of new transmission line corridor within the Talega Hub/Corridor area west of Talega Substation, would be required for the installation of new 230-kV transmission lines and the relocation of existing 138-kV and 69-kV transmission line (Figure 2-7). ~~The new ROW would comprise of approximately 5.94 acres (800~~

[17] *Optical ground wire* is a type of cable that combines the functions of grounding and communications. The conductive part of the cable grounds adjacent electrical structures to the earth, and shields conductors from lightning strikes. The optical fibers within inner core of the cable are used for high-speed data transfer.

Path: \\prtbhp1\GIS\SanFrancisco\SOCRE\Maps\MXDs\Letter_Sized\Figure2_Talega_ROW.mxd

Existing ROW

New ROW Potentially Required

County Boundary

Source: CPUC 2014 and 2016

Figure 2-7

New ROW for the Proposed Project

South Orange County
Reliability Enhancement Project

~~feet by 420 feet) from Talega Associates, LLC and approximately 4.03 acres (600 feet by 480 feet) from the Foothill/Eastern Transportation Corridor Agency.~~

2.3.6 Fire Safety Features

The proposed project would include the following design components, which could reduce fire risk: increased conductor spacing for new 69-kV structures (conductor spacing is typically increased from 6 to 9 feet, the installation of transmission and distribution line steel poles designed to withstand wind speeds of 85 miles per hour, the replacement of existing wood poles with steel poles, and the relocation into underground conduit of a few miles of overhead distribution line. The applicant and its contractors would follow SDG&E's Wildland Fire Prevention and Fire Safety Standard during construction of the proposed project (see Section 2.6.1.3, "SDG&E Wildland Fire Prevention and Fire Safety Standard").

2.4 Construction of the Proposed Project

2.4.1 Construction Schedule, Personnel, and Equipment

The applicant estimates that construction of the proposed project would require approximately 64 months (Table 2-6). Figure 2-~~7~~8 illustrates how the construction periods for each component of the proposed project may overlap. The applicant anticipates that construction within the Talega Hub/Corridor area and along the proposed 230-kV route would not occur during peak electrical demand periods, which typically occur from June through September. A more detailed construction schedule is provided in Appendix G. For the purposes of this EIR, assumptions were made about construction schedule and sequencing. Therefore, the following descriptions are based upon these assumptions and may not constitute the final construction schedule and sequencing. Actual construction sequencing for transmission lines would be dependent upon numerous factors such as construction start date, time of year, and availability of outages. Depending upon the time of year construction begins, the first construction activities would vary. For example, if construction were to begin in May (as assumed above), initial transmission line construction would focus on activities and project segments that can be completed during peak load season. Alternatively, if construction were to being in the fall (outside of peak load season), initial transmission line construction would focus on portions of the project that would require outages.

Table 2-6 Construction Schedule

Project Component	Estimated Start	Estimated Duration
San Juan Capistrano Substation (Phase 1) - Includes energizing proposed 138-kV substation facilities - Includes Transmission Line Segment 1a	May 2015	30 months
12-kV Distribution Lines	May 2015	11 months [a.]
Transmission Line Segments 1b through 4 (230-kV lines)	May 2015	36 months
San Juan Capistrano Substation (Phase 2) - Includes energizing all proposed substation facilities	November 2017	21 months
Substation Site and Transmission Line Corridor Restoration	November 2017	4 months [b.]
Transmission Lines Segment 4 (138-kV and 69-kV lines) - Talega Substation, Talega Hub/Corridor	October 2019	9 months
Estimated Completion Date	**August 2020**	**64 months**

Source: SDG&E 2012b
Key: kV = kilovolt
Notes:
[a] Includes an additional month (April 2015) for rerouting 12-kV Circuits 314 and 799 to a temporary position near the proposed San Juan Capistrano Substation site. The remainder of the 12-kV distribution line work would occur later during the construction schedule.
[b] Restoration activities would begin in 2017 and be ongoing throughout the remainder of construction.

Figure 2-~~7~~8 Hypothetical Construction Schedule and Phasing Based on a May 2015 Start Date

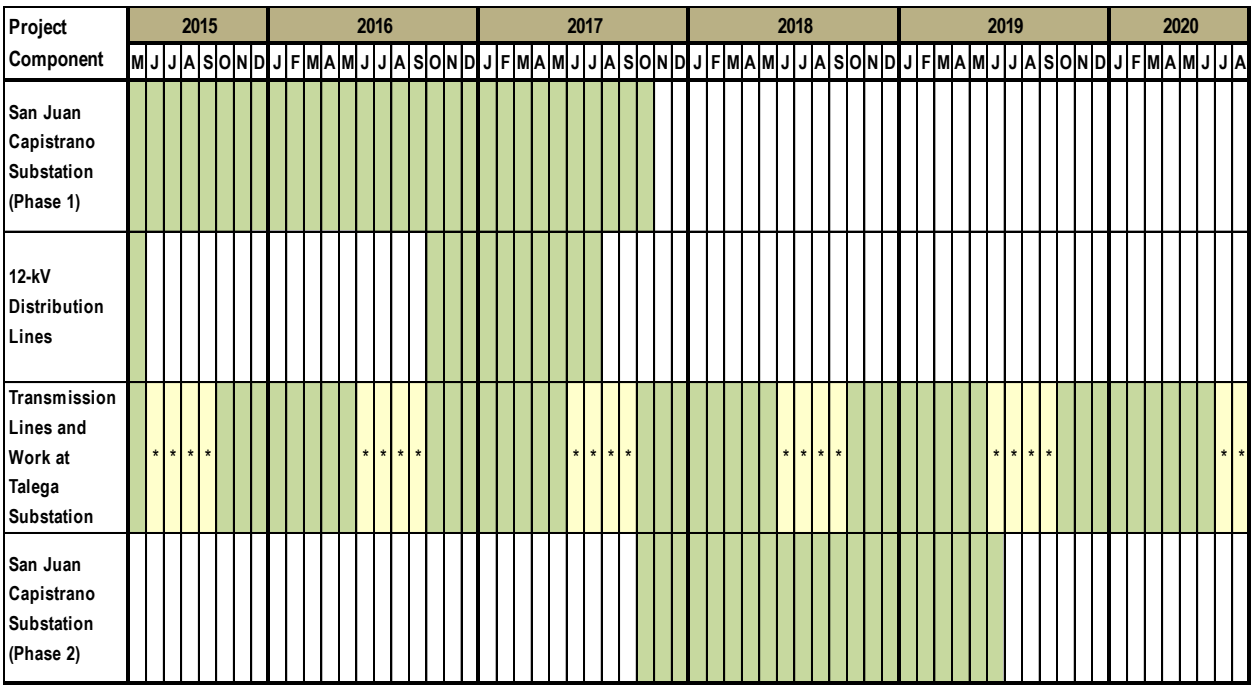

Source: SDG&E 2012b

Note: * All outages for construction would require approval in advance by the California Independent System Operator. Transmission line work would be limited during peak load season (June through September) or at any time depending upon requirements of the CAISO. Work that requires energizing and de-energizing transmission line segments would be scheduled to avoid customer electrical outages.

2.4.1.1 Construction Phasing and Outage Planning

Phasing for construction of each component of the proposed project and planned electrical outages would be determined during final engineering. The final construction phasing plan would be sequenced based on input from all relevant groups, including the CPUC and California Independent System Operation (CAISO), to ensure that electrical loads are maintained. This section provides a preliminary phasing plan organized by project component and discusses outage planning. The applicant anticipates that construction activities would begin at the Capistrano Substation site as follows.

Capistrano Substation Site

Construction would begin with demolition of existing facilities located within the lower yard area of the Capistrano Substation site (Figure 2-3). Trenching for underground conduit installation and construction of foundations for transmission line poles west of the Capistrano Substation site would also commence. Construction Phase 1 at Capistrano Substation would generally proceed as described in Section 2.4.4., "Substation Construction Activities."

Following completion of Phase 1, the 138-kV transmission lines and 12-kV distribution lines would be connected, and the 138/12-kV transformers and 138-kV and 12-kV facilities would be energized. The applicant assumes that outages required to connect the proposed transmission and distribution lines to the new 138-kV and 12-kV substation components would not occur during peak load season and that outages would be subject to change and cancellation based on varying load conditions from weather and other

outages that may occur on the State's transmission system.[18] The Talega–Laguna Niguel–San Mateo 138-kV Line (TL13835) would temporarily be looped into the new 138-kV substation facilities until the proposed 230-kV facilities are energized. As discussed in the next section, TL13835 would temporarily be converted into the Talega–San Mateo–Capistrano 138-kV Line during construction.

Grading, Access Roads, and 230-kV Structure Foundations

Most of the grading for access road and structure foundation construction would be completed as an early step after start of construction. After grading is complete, foundations for ~~many~~some of the proposed 230-kV structures could be constructed. Line TL13835 would not need to be de-energized for these construction activities and could occur during peak load season as needed.

Work Requiring Outage of TL13835 (Outside Peak Load Season)

The construction of proposed pole Nos. 34 to 42 would require that line TL13835 be de-energized. The applicant would install these poles depending upon outage availability. After grading and structure foundation installations are complete, the section of existing conductor between proposed pole Nos. 34 to 42 would be removed. The proposed 230-kV structures and conductor would then be installed, which would require a continuous outage of TL13835. The applicant anticipates that an overhead tap (a connection point) would be installed to an adjacent 138-kV line near Pico Substation to create a three-terminal line (the Talega–San Mateo–Capistrano 138-kV Line). The tap would provide flexibility for TL13835 outages required during 230-kV construction northwest of proposed pole No. 34. Actual construction sequencing is dependent upon the actual construction start date, time of year, and availability of outages.

Installation of the proposed 230-kV structures and conductor northwest of proposed pole No. 34, including the underground section along Vista Montana Road, may continue until peak load season. During this period, the new 230-kV line would likely be energized at 138 kV and connected to the remaining conductor and structures of TL13835. Construction sequencing would be planned such that adequate structures and conductor are in place for TL13835 to operate during peak load season.

Talega Substation and Talega Hub/Corridor Area

Work within the Talega Hub area could begin pending outage availability and as schedule permits. Some 69-kV and 138-kV project elements within the Talega Hub are required to create clearance for the new 230-kV transmission lines. Work at the Talega Hub/Corridor area would likely begin with grading and foundation installation. Grading, foundation installation, and structure erection for pole Nos. 44 to 49 would likely not require an outage and could be initiated as the overall schedule permits.

After the proposed Escondido–Talega 230-kV Line (TL23030) is installed, the outages at Talega Substation required to complete the proposed project could occur. To energize TL23030, the following work would need to be completed:

- San Juan Capistrano Substation 230-kV/138-kV facilities constructed; and
- Conductor strung from pole Nos. 1 to 49 (excluding structure 43, which would only support TL23007).

[18] Transmission line outages require approval by the California Independent System Operator. Outages when the applicant switches (cuts over) from the use of old facilities to the proposed facilities may need to occur after normal business hours, at night, or on weekends when customer electrical requirements are lower.

With the proposed TL23030 line (Escondido–Talega–San Juan Capistrano) completed and energized, the remaining work at Talega Hub could then be completed to allow for the installation of the San Onofre–Talega 230-kV Line (TL23007). The applicant anticipates that the work at Talega Substation that would occur after energizing the proposed TL23030 line would be the final project component to be constructed.

Outage Planning

During final engineering for the proposed project, SDG&E Grid Operations would conduct system performance studies for all planned outages. These studies would identify operating conditions (e.g., highest system loads) that can accommodate each outage. SDG&E Grid Operations would also identify any mitigating procedures to minimize the customer load at risk. All transmission outages would be reviewed and approved by the CAISO and studied in advance by the applicant's outage coordination team. An outage plan, including a description of temporary configurations, would be submitted to the Western Electricity Coordinating Council and CAISO in time to allow for the required 180-day review process prior to start of construction. After the 180-day review, day-ahead studies by SDG&E Grid Operations and CAISO would be completed prior to each planned outage to verify that the outage would be acceptable based on expected load and/or weather conditions. Real-time conditions on the day of, or during, the outage could necessitate an outage recall that would require the applicant to reenergize its facilities and stop construction activities associated with the outage.

SDG&E Grid Operations anticipates that, at most, a single 138-kV line would be de-energized at a time. A specific construction sequencing plan has been created to enable that allowance. For every outage taken on a line, a recall time is specified and a recall plan (a "go-back" plan) is in place to restore service as quickly as possible if necessary. The duration of each outage would depend on the time of year and planned work activities. The longest outages would occur along transmission line TL13835.

2.4.1.2 Construction Workforce and Equipment

The applicant estimates that up to 80 people per day would be required to construct the proposed project. Included in this estimate is a maximum of 20 people per day working at the proposed San Juan Capistrano Substation site. Up to 15 workers per day would be required for construction of the 12-kV distribution lines. In addition, up to nine crews for grading, foundation installation, and wire stringing (approximately 45 workers) could be working at the same time for construction of the proposed double-circuit 230-kV transmission line and at Talega Substation. Construction of the proposed San Juan Capistrano Substation would require more workers than the improvements to the Talega Substation, as shown in Table 2-7. For a complete list of construction equipment, including all equipment used during transmission line construction, refer to Appendix F.

Table 2-7 Construction Personnel at the San Juan Capistrano and Talega Substation Worksites

Construction Activity	Substation	Average Number of Workers (Daily)
Demolition	San Juan Capistrano	9
Grading/Site Development	San Juan Capistrano	11
Below-Grade Construction	San Juan Capistrano and Talega	7 to 8
Above-Grade Construction	San Juan Capistrano and Talega	7 to 16
Relay Testing, Cutover, and Energizing	San Juan Capistrano and Talega	6 to 11

Source: SDG&E 2012b

2.4.1.3 Vehicle Trips during Construction

Construction workers commuting to and from worksites would account for the majority of daily vehicle trips during construction. Waste and concrete hauling would also generate a substantial number of on-road vehicle trips. The applicant estimates that one to two truck trips per day would be required during trenching activities at any single worksite. The number of truck trips required to haul excavated materials from trenching activities for underground transmission and distribution line installation would vary based on the rate of the trenching, number of sites excavated at the same time, the excavated area's terrain, and proximity to staging areas used for the storage of fill and excavated materials.

The applicant estimates that up to 174 one-way construction trips could be generated per day. This estimate assumes 87 vehicle roundtrips and includes both on-road construction vehicles and worker commute vehicles. These estimates assume that multiple transmission and distribution line segments would be constructed at the same time.

Oversized/overweight vehicles would be needed to deliver the proposed transformers to the substation sites and deliver each underground splice vault.

2.4.2 Land Disturbance

Approximately 49 acres would be temporarily disturbed and ~~11~~16 acres permanently disturbed for construction of the proposed project (Table 2-8).[19] The map sheets provided in Appendices C and D indicate where temporary and permanent disturbance areas would occur.

Temporary disturbance areas would include staging areas; laydown areas (transmission line pole work areas); and conductor cable pull, tension, reel, and splicing sites (wire stringing sites). Helicopter *fly yard*[20] disturbance areas are not included in Table 2-8 in addition to staging areas because the fly yards would be located within a staging area, at one of the applicant's permanent storage areas at an existing substation site, or at an airport. Refer to Section 2.4.8, "Staging Areas, Stringing Sites, Work Areas, and Helicopter Fly Yards," for a description of where fly yards would be located. Trenching areas for underground line installation, guard structure installation sites, and structure removal sites would also be temporary disturbance areas. Structure removal sites would be restored by grading (as appropriate), reseeding, and revegetation.

Permanent disturbance areas would include new access road segments; retaining walls (where necessary); distribution and transmission line poles, pole foundations, clearance areas (areas maintained free of vegetation around each pole); and maintenance pads. Refer to Section 2.4.8, "Staging Areas, Stringing Sites, Work Areas, and Helicopter Fly Yards," for further description about each type of disturbance area.

[19] The permanent land disturbance estimate accounts for areas that are already permanently disturbed (e.g., Talega Substation and areas of the applicant's Capistrano Substation property). Areas that are already permanently disturbed would be temporarily disturbed during construction of the proposed project, which would result in fugitive dust emissions and other effects, but these areas would not become new permanent disturbance areas.

[20] Helicopter *fly yards* are areas that helicopters fly to and from while carrying out construction activities. Helicopters would load, unload, land, and refuel at designated fly yards. Helicopter fly yards are designated at specific staging areas outside of transmission line ROW and at specific laydown areas (work areas) within transmission line ROWs.

Table 2-8 Temporary and Permanent Land Disturbance Estimates

Component [1]	Acres Disturbed During Construction	Acres Restored	New Acres Permanently Disturbed
Substations			
Capistrano/San Juan Capistrano Substation [2,3]	6.4	0.0	3.2
Talega Substation	7.1	0.0	0.0[3]
Subtotals	***13.5***	***0.0***	***3.2***
Transmission Lines			
Laydown areas / new underground conduit [4,5]	~~10.03~~17.11	~~10.02~~7.71	~~0.01~~9.4
Maintenance pads (including clearance areas)	~~6.93~~3.21	0.0	~~6.93~~3.21
Pole removal sites [6]	2.04	2.04	0.0
Stringing sites [7]	2.0	2.0	0.0
Staging areas [8]	~~12.2~~8.80	~~12.2~~8.80	0.0
New access roads segments [9]	~~0.5~~0.2	~~0.0~~0.16	~~0.5~~0.04
Subtotals	***~~33.7~~33.36***	***~~26.26~~20.71***	***~~7.44~~12.65***
Distribution Lines [10]			
Trenching for new underground conduit [11]	1.6	1.6	0.0
Laydown areas [12]	0.4	0.4	0.0
Clearance areas (and four maintenance pads) [12]	0.3	0.0	0.3
Stringing sites	0.66	0.66	0.0
New access roads segments [9]	0.04	0.0	0.04
Subtotals	***3***	***2.66***	***0.34***
Totals	**~~50.2~~49.86**	**~~28.92~~23.37**	**~~10.98~~16.19**

Source: SDG&E 2012b

Key: Clearance Area = area maintained free of vegetation around each pole; I-5 = Interstate 5; Laydown Area = temporary work areas at each pole site; Maintenance Pad = permanent work areas maintained at pole sites; Stringing Site = conductor cable pulling, tensioning, reel, or splicing sites; Staging Area = temporary storage or construction activity preparation area

Notes:

1. All disturbance estimates were provided in the applicant's as GIS data unless otherwise indicated.
2. The proposed San Juan Capistrano Substation facilities would require the entire 6.4-acre Capistrano Substation property.
3. The permanent disturbance estimates account for 3.2 acres of the Capistrano Substation site and the entire Talega Substation site that are already permanently disturbed. Construction of the proposed project would temporarily disturb land at these sites but would not result in an equivalent amount of new permanent disturbance areas.
4. Construction work areas include temporary work space for construction of new overhead transmission line structures, construction areas for trenching and installation of underground splice vaults and temporary guard structure installations on each side of roadway crossings and other sensitive crossings (e.g., railroads and waterways).
5. The applicant estimates that approximately 40 guard structures would be installed and then removed for the proposed transmission line installations (see Section 2.4.5.3, "Foundations, Assembly, and Wire Stringing").
6. This estimate accounts for additional disturbance areas for approximately 35 poles that would be removed but are not located adjacent to/in proximity to a proposed pole site. It was assumed that each pole would require a 35-foot by 70-foot work area for removal.
7. The stringing site estimate accounts for disturbance areas not already included in the laydown areas disturbance estimate.
8. Staging areas (also commonly referred to as staging yards or laydown yards) are fenced, secure areas where construction staging and materials laydown and storage commonly occur. Staging areas may include helicopter landing areas (see Section 2.4.8, "Staging Areas, Stringing Sites, Work Areas, and Helicopter Fly Yards"). An additional staging area (Staging Area 5; Figure 2-1) was added to account for helicopter operations that may occur near Talega Substation.
9. New access road disturbance estimates are based the GIS data provided and the data presented in Table 2-10. Where new access road segments would be created, the lengths and widths provided by the applicant were multiplied to estimate the disturbance area. Where an existing access road would be widened to a transmission line pole site, the applicant's GIS data accounted for the disturbance, and the disturbance is included in the laydown area, maintenance pad, or staging area disturbance estimate.
10. The same staging areas (yards)used for transmission line construction would be used for distribution line construction.
11. The disturbance estimate for distribution lines sections that would be installed in new underground conduit was based on the assumption that open-cut trenching would require a 25-foot-wide work area and that the total length of new trench would be approximately 2,700 feet.
12. The applicant did not provide GIS data for distribution line laydown areas. For the purposes of this EIR, it is assumed that each temporary laydown area would be 40 feet wide and 40 feet long. This estimate may be larger than what the applicant would require in some cases because it does not account for laydown areas that would overlap. Clearance areas were estimated to be a 10-foot-diameter radial area around the base of each distribution line pole. Maintenance pads (35-feet wide by 70-feet long each) for four distribution line poles that would be installed at the proposed I-5 crossing are included in the clearance area disturbance estimate and would so be utilized for construction activities.

2.4.2.1 Excavation, Fill, and Surface Improvements

Table 2-9 presents the estimated amount of material (soil and rock) that would be excavated (cut) and the amount required to fill excavated areas or level ground surfaces. After areas are excavated and grading is completed at the proposed San Juan Capistrano Substation site, other surface improvements would be completed. After Construction Phase 1 (Section 2.4.4.1, "San Juan Capistrano Substation Construction") for the proposed substation, a 12-inch layer of Class II Aggregate gravel would be spread throughout the lower yard area, and the substation driveways would be paved. After Construction Phase 2, a 12-inch layer of Class II Aggregate rock would be spread throughout the upper yard area, and the remaining, unpaved substation driveway surfaces would be paved.

Table 2-9 Cut and Fill Estimates

Component	Cut (cubic yards)	Fill (cubic yards) [d.]
San Juan Capistrano Substation Grading Phase 1	20,400	22, 800
San Juan Capistrano Substation Grading Phase 2	12,200 [a.]	8,000
Transmission pole drilling and hole filling	250 [b.]	125
Distribution pole drilling and hole filling	20 [c.]	10
Transmission pole site grading	10,600	5,800
Distribution pole site grading	Not specified	Not specified
Trenching: jack and bore (3 locations) [e.]	2,000	1,700
Trenching: open cut	510	650
Staging areas and helicopter fly yards	Not specified	Not specified
Access roads	Not specified	Not specified

Source: SDG&E 2012b

Notes:

a. If soil from the upper yard is disposed of offsite because of contamination from the existing Capistrano Substation, clean imported soil or excess soil from the lower yard would be used to replace the contaminated soil as needed during grading.

b. Assume 82 transmission poles to be installed and 3 cubic yards of soil excavated per hole.

c. Assume 10 distribution poles to be installed and 2 cubic yards of soil excavated per hole.

d. The amount of fill soil required, in general, is less than the amount excavated because of the equipment, conduit, concrete, aggregate, and engineered fill materials installed in excavated areas.

e. The applicant has identified one location where jack and bore construction would be required.

2.4.3 General Construction Methods and Materials

2.4.3.1 Nighttime and Other Non-standard Work

The applicant does not anticipate that nighttime construction would be required for the proposed substation, transmission lines, or 12-kV distribution lines; however, some special construction activities may require that work be performed during non-standard work hours.

Nighttime or other non-standard work hours could be required by other oversight agencies (e.g. Caltrans, CAISO, and local jurisdictional agencies). Some construction activities that could require non-standard work hours include (but are not necessarily limited to):

- Energizing underground conductor or other transmission line construction activities that require CAISO outages.
- Work (e.g. stringing of new conductor) over Caltrans ROW (see Section 2.4.9).

- Transfers (cut over) from old facilities to the proposed facilities. Delivery of oversized/overweight equipment (e.g., transformers to be installed at the proposed San Juan Capistrano Substation).
- Vacuum filling of new transformers (see "Vacuum Filling" section below).

Vacuum Filling

The transformers to be installed at San Juan Capistrano Substation would be filled with transformer oil after installation at the substation but prior to energizing the substation. This process involves establishing a vacuum within the transformers while pumping transformer oil into bottom. Damp air within the transformer is removed (typically) by circulating hot transformer oil. The pumps would be powered by 480-volt electrical power from the substation site or a portable generator (e.g., WhisperWatt or equivalent petroleum-fuel-powered generator) that would generate noise levels below 60 dBA[21] at 3 feet.

The filling process runs continuously and is expected to take between 48 and 96 hours per *transformer bank*—depending on the dew point and transformer manufacturer specifications. The two proposed 230/138-kV 352 MVA transformers would each take approximately 36 hours to fill, and three proposed 138/12-kV 30 MVA transformers would each take approximately 24 hours to fill.

2.4.3.2 Identification of Underground Utilities

By California law, prior to conducting any excavation, including trenching or drilling boreholes for structure installations, the applicant or its contractor would be required to contact Underground Service Alert to identify underground utilities in the construction area. If other utilities are located in the construction area, the applicant would contact the owner of the utility to discuss protection and avoidance measures. For trenching, the applicant would conduct exploratory excavations (i.e., potholing) to verify the locations of underground facilities.

2.4.3.3 Water Use during Construction

Water would be used for dust control and work associated with the proposed substation facilities and transmission poles that require concrete foundations. The applicant estimates that 39,300,000 gallons of water would be required for construction activities and anticipates that the Municipal Water District of Orange County would supply the water. Up to 100,000 gallons of water could be used per day and up to 800,000 gallons per month during grading activities at the Capistrano Substation site. The applicant estimates that approximately 4.5 million gallons of water would be required for grading at the site (3 million gallons during substation construction Phase 1 and 1.5 million gallons during Phase 2; refer to Section 2.4.4.1, "San Juan Capistrano Substation Construction"). The applicant notes that under severe drought conditions, a moratorium on the use of potable water for dust control, compaction and other construction activities could be imposed by regulatory agencies.

The applicant estimates that approximately 34,800,000 gallons of water would be used during construction activities (dust control, grading, and structure foundation) for the transmission line portion of the project.

[21] The A-weighted decibel (dBA) noise scale deviates from the decibel scale at specific frequencies to account for how humans perceive sound.

Water would be transported to project sites in water trucks equipped for dispersing water onto areas disturbed by earth-moving activities and construction vehicle movement. The applicant anticipates that trucks capable of carrying 4,000 gallons of water would be used.

2.4.3.4 Blasting

The applicant does not anticipate blasting would be required to complete construction of the proposed project.

2.4.3.5 Tree Removal

A number of trees would be removed west of Camino Capistrano along Segment 1a (Figure 2-1) and within and near the proposed substation site.

2.4.3.6 Waste Disposal and Recycling

The applicant estimates that 75,500 cubic yards of solid waste, including excess soil from grading and excavation, would be generated during construction of the proposed project. The applicant reuses or recycles old utility structures/poles, materials, and components following the retirement of substations and power lines. Whatever cannot be reused or recycled is disposed of at a facility licensed to accept the waste. The applicant anticipates that nonhazardous solid waste would be disposed of at Prima Deschecha Landfill or, alternatively, at the Otay Landfill. The applicant estimates that approximately 80 percent of substation waste (building materials [e.g. concrete, steel, etc.], wiring/connectors and insulators, old substation equipment [steel]) would be reused or recycled.

Steel transmission and substation structures/poles, conductor cable, scrap steel, copper, and other metal, concrete, and batteries are typically reused, recycled, or sold for scrap. Powerline insulators and untreated scrap wood are typically disposed of in a landfill. Soils, vegetation, and soil mixed with debris would be tested. If nonhazardous, it would be disposed of at a landfill. Nonhazardous, excess soil from grading activities at the proposed transmission line structure and access road sites may be spread over existing access roads or work areas as appropriate.

Asphalt, concrete, and other excavated materials from trenching activities for underground conduit and vault installation would be hauled to a temporary staging area or one of the applicant's existing materials storage yards (see Section 2.4.8, "Staging Areas, Stringing Sites, Work Areas, and Helicopter Fly Yards"). Suspect- materials (stained, discolored, odious, or otherwise suspect) would be tested and managed in accordance with all local, state and federal regulations. If nonhazardous, they may be stored for use as backfill material or disposed of in a landfill.

Treated Wood Poles

Treated wood transmission poles would be disposed of at facilities appropriately licensed to accept this type of waste. The applicant estimates that 208 tons of wood utility poles would be removed as part of the proposed project.

2.4.3.7 Hazardous Waste and Contaminated Groundwater and Soils

Used transformer oil and transformer oil from the transformers decommissioned as part of the proposed project would be tested and recycled or disposed of pursuant to all applicable regulations. Groundwater

that may be encountered during trenching would be removed using pumps, stored for testing, and disposed of in accordance with all applicable regulations.

Contaminated soils encountered during construction of the proposed project exceeding land use regulatory limits would be excavated and removed. Contaminated soil removed from construction areas, and soils excavated during trenching that exceed regulatory limits for contamination, would be transported and disposed of in accordance with all applicable regulations. The applicant has identified two potential hazardous waste disposal facilities in the proposed project area. The Waste Management Kettleman Hills Facility is located about 230 miles north of San Juan Capistrano in Kettleman City, California. The Clean Harbor Environmental Services facility is located in Buttonwillow, California, about 180 miles north of San Juan Capistrano.

After excavation but prior to removal from the construction area, soil and other waste material may be temporarily covered with plastic sheeting, and appropriate best management practices (BMPs) would be implemented until the waste can be characterized for appropriate disposal. The waste may also be temporarily stored in roll-off bins.

Used Transformer Oil

The applicant anticipates that used transformer oil would be pumped into tanker trailers and transported to an appropriately permitted offsite recycling or disposal facility.

2.4.4 Substation Construction Activities

2.4.4.1 San Juan Capistrano Substation Construction

Construction of the proposed San Juan Capistrano Substation would occur within the existing property boundary; no adjacent properties or uses would be relocated (Figure 2-3).

Upper, Upper-Mid, Lower-Mid, and Lower Pad Development

Site development would be performed in two phases and involve regrading most of the existing property to create four separate and distinct pads in a terraced configuration (Figure 2-4 and Appendix E). The west side of the site would contain the lower pad, of approximately 1.1 acres in area, where the 12-kV facility and 138/12-kV transformers would be located. The next pad to the east, the lower-mid pad, would be approximately 12-feet to 14-feet higher and approximately 1.4 acres in area; it would contain the 138-kV GIS substation building and the 230/138-kV transformers. The lower and lower-mid pads would be located in the existing lower yard area of the property.

The upper-mid pad would be approximately 10-feet to 12-feet higher than the lower-mid pad and approximately 0.9 acres in area; it would contain the 230-kV GIS substation building. The upper pad would be approximately 7-feet higher than the upper-mid pad and approximately 0.8 acres in area; it would contain the 230-kV capacitor banks. The far east end of the upper pad would remain with an existing approximately 8-foot to 10-foot high embankment at a 2 to 1 slope to meet the existing sidewalk elevation along Calle Santa Rosalia. The upper and upper-mid pads would be located in the existing upper yard area of the property.

Construction Phase 1 (Lower Yard Area)

Construction activities in the lower yard area of the substation property would occur during Phase 1. The existing footprint of Capistrano Substation would not be disturbed during this phase, and the existing

substation would remain energized. Each of the following bulleted activities would occur, in general, subsequent to the preceding activity:

- Construct a temporary getaway to remove the one existing 12-kV circuit that crosses the lower yard and reroute the existing 12-kV circuit that cross the lower yard.
- Remediate the abandoned concrete utility building in lower yard area of asbestos and lead paint. Abatement would be required prior to demolition.
- Install a temporary security fence that surrounds the upper and lower yards until the permanent wall and fencing is constructed.
- Regrade along the north property line and realign the northern access road off of Camino Capistrano. The completion of north access road is required to provide 24 hours a day, seven days a week access to the upper yard of the existing substation while the remainder of the lower yard is under construction.
- Demolish and remove the existing concrete utility building and its foundation (5,200 square feet) in the lower yard.
- Remove existing miscellaneous items such as remnant foundations, fencing, concrete steps, water lines, sewer lines, septic tanks, and paving.
- Grade the lower yard area to create two terraced pads (the lower pad and lower-mid pad; Figure 2-4 and Appendix E). The lower yard area is underlain by shallow, undocumented fill soils and loose alluvial sands. To provide uniform support of the new pads and poles, the upper three to five feet of these soils would be over excavated and recompacted prior to placing new fill and grading of the pads.
- Plug and abandon the onsite water well pursuant to Orange County well abandonment and environmental health procedures (Geosyntec 2012).
- Reconstruct the existing 20-foot wide southern access driveway into a 30-foot wide access driveway.
- Construct an approximately 10-foot high masonry or concrete retaining wall to separate the two lower pads.
- Construct the proposed masonry walls along the north, south, and west borders of the lower yard portion of the property.
- Construct bioretention facilities (see Grading and Drainage Design, below).
- Install a 12-inch layer of Class II aggregate throughout the lower yard and pave the access roads after completion of Construction Phase 1 grading.
- Install below-grade foundations for all the 138-kV equipment including the control shelter, the GIS substation building and equipment, 138-kV cable poles, and 138-kV transformer termination stands.
- Install below-grade foundations for 12-kV equipment including 138/12-kV transformers (including oil containment and fire walls), switchgear pads, and capacitor pads.
- Construct the new 138-kV GIS substation facility and new 12-kV air-insulated substation facility on the lower and lower-mid pads.
- Install control, telecommunication, and security ducts.

- Construct and stub power ducts (12-kV and 138-kV) outside the substation.
- Begin installation of landscaping.
- Install ground grid.

Above-grade 138-kV construction, including the GIS substation building and masonry block control shelter and 12-kV construction, would begin after foundation work is completed. Wiring for equipment controls and protection devices would be installed concurrently with above-grade construction. Activities would include the following, but may not occur in the order listed:

- Install 138-kV equipment in the new 138-kV GIS substation building.
- Install and wire control/protection panels, equipment, and batteries in the control shelter.
- Construct three 138-kV transformer termination stands.
- Construct two firewalls between the three 138/12-kV transformers.
- Install and assemble the three 138/12-kV transformers on their foundations.[22]
- Install and assemble the switchgear on foundations.
- Install and assemble three 12-kV capacitors on foundations.
- Install 138-kV and 12-kV poles.
- Install substation lighting and associated electrical equipment to power the substation.
- Install telecommunications and security cables.
- Install conductor cables.
- Equipment testing would be performed following installation of equipment, relay panels, controls, batteries, telecommunication, and station lighting and power systems.

A temporary 138-kV transmission line section would be installed using an existing position in the new GIS substation and existing poles of the 138-kV line that currently connects Talega Substation to Laguna Niguel Substation. The temporary line would provide a 138-kV connection between Talega Substation and the new 138-kV facilities at the proposed San Juan Capistrano Substation, while the proposed 230-kV transmission facilities are constructed. In addition, a few temporary poles and underground ducts may be installed within the proposed substation site and along Calle Bonita to allow for temporary re-routing of one 12-kV circuit (Circuit 314) during grading and construction of the lower and lower-mid pads.

Following completion of the activities listed above, the 138-kV transmission lines and 12-kV distribution lines would be connected, and the 138/12-kV transformers and 138-kV and 12-kV facilities would be energized.

Construction Phase 2 (Upper Yard Area)

Construction activities in the upper yard area of the proposed substation site would occur following energizing the proposed San Juan Capistrano Substation 138-kV facilities and de-energizing of the existing Capistrano Substation 138-kV facilities. Construction access would be from the relocated

[22] Night or weekend work could be required to accommodate delivery of the transformers to be installed at the proposed San Juan Capistrano Substation. Vacuum filling of the transformers would also occur at night (Section 2.4.3.1, “Nighttime Work and Other Non-standard Work”).

northern access road within the northern boundary of the proposed substation site. A temporary chain link security fence would be constructed along the south side of the access road to keep construction vehicles and personnel out of the active 138/12-kV yard. During Construction Phase 2, each of the following bulleted activities would occur, in general, subsequent to the preceding activity:

- Remove old 138/12-kV air-insulated substation equipment and foundations.
- Regrade the upper yard area into two pads: the upper-mid and upper pads.
- Extend the lower-mid pad area to the east (east of the new, energized 138-kV facilities) to accommodate the proposed 230/138-kV transformers.
- Construct an approximate 10-foot-high retaining wall across the eastern end of lower-mid pad to allow development of the upper-mid pad for the proposed 230-kV GIS substation building.
- Grade the upper pad for 230-kV capacitor banks.
- Rebuild an existing embankment at the east end of the substation site to a 2 to 1 slope.
- Install a 12-inch layer of Class II aggregate throughout upper pads and pave the remaining access road areas.
- Complete construction of the northern and southern substation screening walls.
- Remove and replace fencing.
- Construct below-grade foundations for all 230-kV equipment, including the control shelter, GIS substation building and equipment, transformer dead-end poles, 230/138-kV transformers including oil containment and firewalls, 230-kV capacitors, and 230-kV steel poles.
- Install control, telecommunication, and security ducts.
- Install ground grid.
- Install the remaining exterior landscaping.

Above-grade 230-kV installations would commence as foundation work is completed. Activities would include the following, but may not occur in the order listed:

- Construct the 230-kV GIS substation building and masonry block control shelter.
- Wire equipment controls and protection devices.
- Install 230-kV equipment in the new 230-kV GIS substation building
- Install and wire control/protection panels, equipment, and batteries in the control shelter.
- Construct two 230-kV transformer dead-end structures.
- Install a firewall between the transformers.
- Install two 230-kV capacitors.
- Install 230-kV steel poles.
- Install conductor cables.
- Install substation lighting and associated electrical equipment to power the substation

Equipment testing would be performed following installation of equipment, relay panels, controls, batteries, telecommunication, and station lighting and power systems. After the equipment is tested, the following steps would be taken to complete construction and installation of the proposed 230-kV substation facilities:

- Connect the two 230-kV transmission lines to the new 230-kV GIS substation facility.
- De-energize the temporary 138-kV transmission line.[23]
- Adjust relays at remote ends of the transmission lines.
- Energizing the proposed 230-kV transmission lines.
- Energize the buses, 230/138-kV transformers, and 230-kV capacitors.

Grading and Drainage Plan

The difference in elevation between the upper and lower yard areas (Figure 2-3) is approximately 47 feet. Construction of the proposed substation would include permanent cut and fill slopes and installation of retaining walls. The majority of the site's storm water drainage currently flows to a discharge structure located at the southwest corner of the site from which it is discharged via an 18-inch pipe into the existing 57-inch city storm drain running along Camino Capistrano. A portion of the northwestern quadrant of the site drains by sheet flow to the curb inlets along the east side of Camino Capistrano.

After construction, storm water drainage would be collected through a series of inlets, culverts, and brow ditches and conveyed to bioretention facilities located at the northwest and southwest corners of the site. The bioretention facilities would have a controlled discharge to the existing 57-inch storm sewer located under Camino Capistrano. There would be no additional sheet flow runoff from the site to the curb and gutters on Camino Capistrano.

Hydromodification Control Best Management Practices

The proposed project would implement water quality standards and hydromodification controls consistent with San Diego Regional Water Quality Control Board (Region 9) and South Orange County permit requirements. Implementation of water quality standards would include construction of hydromodification control BMPs and bioretention facilities. Bioretention facilities, such as open water quality basins and/or subsurface vaults, would be installed to provide flow duration control of the site runoff to a level consistent with City of San Juan Capistrano requirements.

Storm Water Pollution Prevention Plan

Prior to construction, the applicant would acquire a National Pollutant Discharge Elimination System (NPDES) permit from the San Diego Regional Water Quality Control Board and prepare a Storm Water Pollution Prevention Plan (SWPPP). The NPDES permit and the SWPPP would describe dewatering procedures, storm water runoff prevention control procedures, monitoring and reporting procedures, and BMPs.

[23] Periods during which the applicant switches (cuts over) from the use of temporary facilities to the proposed facilities may occur after normal business hours, at night, or on weekends when customer electrical requirements are lower.

Preliminary Site Inspections

Inspections of the Capistrano Substation site were conducted in 2002, 2008, and 2009. The inspections identified environmental issues involving lead-based paint; soil contaminated with petroleum hydrocarbons, lead, and chromium; asbestos-containing materials; and a structure with lead-based paint.

2.4.4.2 Talega Substation Construction Activities

The following activities would occur within the existing footprint of Talega Substation (Figure 2-1):

- Relocate 138-kV line TL13831 within Talega Substation to a new overhead steel pole (proposed pole No. 22a) and connect TL13831 to a new bay position. One new breaker and disconnects would be added. An existing steel pole would be relocated to accommodate the new bay position, and a new dead-end pole and cable riser pole would also be installed (proposed pole No. 21a).
- Extend TL13812 to the bay position vacated by TL13831 underground through the substation in approximately 700 feet of new conduit that would begin at proposed pole No. 23a.
- Install two new 230-kV poles (poles No. 48 and 49) and remove one existing pole (Structure Z322704) inside Talega Substation to accommodate the extension of TL23030.
- Disconnect TL23007 from the Talega Substation.
- Remove transformer banks 60 and 62 from service at Talega Substation.

2.4.5 Transmission Line Construction and Removal

The following sections provide an overview of the general methods that would be used to construct the proposed overhead and underground transmission lines. The methods used at each worksite would be similar to those described below but may vary based on final engineering designs for the proposed project. For a complete list of construction equipment required for transmission line construction, refer to Appendix F.

2.4.5.1 Access Road Construction

Equipment and vehicles would use existing access roads to reach the existing and proposed transmission line structure sites. Where necessary to access proposed transmission line structure or underground vault sites, new *spur roads*[24] to the existing access roads would be constructed. Existing access roads and the proposed spur roads are shown in the map sheets presented in Appendices C and D. The new roads would be approximately 14-feet wide when straight and up to 20-feet wide at curves. Bulldozer and soil compactor vehicles would be used to establish new spurs to access roads or to upgrade access roads.

Improvements (reestablish or refresh [regrade]) to existing access roads would be constructed, as necessary(Table 2-10). New or reestablished spur roads would be constructed at proposed poles No. D2, D3, 18 to 20, 25, 27, 28, 43, 45, 14a, 20a, 9b, and 47. In some areas, public roads would be used to access transmission line structures. Refer to Section 4.15, “Transportation and Traffic,” for a list of public roads that would be used. Less than 0.5 mile of new access spur road segments would be constructed (Table 2-10).

[24] *Spur roads* are shorter roads that extend or branch off of access roads. For the disturbance estimates prepared for this EIR, spur roads are referred to as access roads.

Table 2-10 Access Road Construction

Pole No.	Description of Proposed Road Construction
D2 and D3	Construct new road (130-feet long and 14-feet wide).
4	Widen existing road by 4 feet.
7	Improve (i.e., re-grade) existing road and widen corner by 2 feet.
13	Widen existing road by 5 feet.
20	Reestablish unused existing spur road (250-feet long and 14-feet wide).
21	Widen turn on existing road.
25	Construct new spur road (75-feet long and 14-feet wide).
27	Reestablish existing road (75-feet long and 14-feet wide).
28	Construct new road (300-feet long and 14-feet wide).
33	Widen existing road by 5 to 10 feet.
34	Temporarily widen existing road by 5 feet.
35	Temporarily widen existing road by 5 feet.
36	Widen existing road by 5 to 10 feet. Widen two additional roads by 5 to 10 feet each where they intersect with the road to pole No. 36 to create an area usable for conductor pulling.
40	Widen existing roads by 5 feet to create conductor pulling sites located east and west of the structure.
43	Construct new spur road (75-feet long). Width would be approximately 14 feet, but maintenance pads and conductor pulling sites would overlap with the road.
45	Construct new spur road (50-feet long). Width would be approximately 14 feet, but maintenance pads and conductor pulling sites would overlap with the road.
9b and 47	Reestablish existing road (75-feet long). Width would be approximately 14 feet, but maintenance pads and conductor pulling sites would overlap with the road.
4b	Widen existing road by 5 feet.
9a to 11a	Temporarily widen existing road by 25 feet for construction of new underground conduit installation.
14a and 20a	Construct new road (75-feet long). Width would be approximately 14 feet, but maintenance pads and conductor pulling sites would overlap with the road.

Source: SDG&E 2012b
Note: All measurements are approximate.

2.4.5.2 Site Preparation, Work Areas, and Retaining Walls

Prior to installing structure foundations, vegetation at each of the proposed structure sites would be cleared, and the area would be graded flat or terraced if steep slopes are present and depending on soil types present. At some sites, soil may be imported to raise the elevation of the work pad or soil may be excavated to lower the elevation. In some cases, retaining walls may be necessary.

Typically, each transmission line structure~~s~~ would ~~each~~ require a cleared, flat, work area for structure installation (up to 150-feet wide by 150-feet long). These flat work areas are temporary and are referred to as laydown areas or work pads. A cleared, permanent work area(s) referred to as ~~(~~a maintenance pad,~~)~~ that are approximately 35- to 50-feet wide by 75-feet long is typically maintained at transmission structures. Clearance areas (30 feet in diameter) would be maintained free of vegetation around each transmission line pole. Clearance areas would be at least 8 feet in diameter around each distribution line pole. Actual anticipated maintenance pads have been included with the preliminary project design and are shown as permanent impacts in ~~(~~Appendix C~~)~~.

2.4.5.3 Foundations, Assembly, and Wire Stringing

Foundation Construction

For the purposes of analysis in this EIR, it is assumed that each of the proposed 230-kV, 138-kV, and 69-kV transmission line structures would be steel poles and require foundations. In some cases, however, the proposed steel poles would be direct buried into auger holes, which does not require steel reinforcement or anchor bolt cages and requires less concrete than when foundations are installed. Concrete would be used to backfill the holes when the direct-bury installation method is used.

To construct a foundation for steel pole installation, a large auger is first used to excavate an approximately 9- to 11-foot diameter by 20-foot to 40-foot deep hole. Steel reinforcement and anchor-bolt cages are then installed in the hole. The cages would be assembled offsite and transported to the structure sites. Fifty to 100 cubic yards of concrete would then be poured into the hole. The concrete foundation would extend 2 feet above the ground surface. The concrete curing period is approximately one month, during which time workers would remove the concrete forms and place backfill around the foundations.

Dewatering

Dewatering may be necessary if water is present in the auger holes excavated for the steel poles. In general, the following construction dewatering steps would be implemented when dewatering is required or as specified by the NPDES permit:

- A submersible pump would be installed in the hole.
- Groundwater would be pumped to a de-siltation tank (baker tank) for sedimentation settling and filtering. Baffles would be installed in the tank to increase sedimentation. Water in the tank would be allowed to flow out from the tank after filtration.
- Turbidity testing would be performed periodically to ensure compliance with NPDES requirements. If turbidity measurements do not meet permit requirements, additional baker tanks or filtration may be required.

Landslide Control

A preliminary geotechnical report completed for the proposed transmission line states that significant landslide hazards are present along sections of the proposed route because of the soil types, slope, potential seismic activity, and other conditions (URS 2012). The proposed transmission line would be constructed within an existing transmission corridor that has experienced substantial landslides, some of which impacted the applicant's existing transmission facilities. The preliminary geotechnical report recommends that hillside grading be completed to form level pads or create stable slopes at a number of the proposed transmission pole sites. The report recommends that liquefaction potential along the proposed route be investigated further (URS 2012). Refer to Section 4.6, "Geology, Soils, and Mineral Resources," for further discussion about geologic hazards.

Assembly and Erection

The steel poles would be delivered in two or more sections by flatbed truck or helicopter to each structure installation site and assembled onsite using a small truck-mounted crane or helicopter. The proposed double-circuit poles would have six cross arms (three on each side) that would support three conductors on each side of the pole. Each set of three conductors would create a single AC circuit.

The cross arms would be bolted to the poles, and insulators would be bolted to the cross arms. After assembly, a large crane or helicopter would be used to lift and install each pole section into place on the anchor bolts embedded in the concrete foundation. The nuts on the foundation would then be tightened and secured. Where a foundation is not required for steel pole installation (e.g., for the shorter poles), the pole would be installed directly into the hole and concrete would be used as backfill. Aerial bucket trucks are used access structure arms as needed for modifications after the poles are installed. Condor boom trucks are used to access structures more than 100-feet tall.

Temporary Guard Structures

Guard structures are installed temporarily to facilitate the installation of overhead conductor across roadways, sensitive waterways, and utility corridors. Traffic control is typically used for small roadway crossings. For very large roadway crossings, such as freeways, both guard structures and traffic control are typically used.

Prior to stringing conductor, the applicant w would utilize one or more of the following for guard structures: bucket trucks temporary, wood, H-frame guard structures (Figure 2-5c), or flower pots on each side of roadway crossings near the curb, railway crossings, and other locations where the new conductor could come in contact with existing electrical and communication facilities, vehicles, or pedestrians should the conductor accidentally fall during stringing operations. Guard structures would also be installed at each side of waterway crossings.

If temporary wood H-frame guard structures are used, an auger would be used to excavate holes for the guard structures poles, which would be installed by a crane rated to lift 25 tons. No concrete foundations are required for guard structure installation. The applicant does not anticipate that guard structure installation would require grading or site preparation. The guard structures would be removed following the completion of wire stringing operations, and the holes would be backfilled with the excavated soil and additional fill as needed from other areas excavated as part of the proposed project. For the purposes of this EIR, it is estimated that guard structure installation and removal activities would each temporarily disturb an area approximately 20-feet wide by 20-feet long.

Transmission Line Stringing (Wire Stringing)

Wire stringing operations begin with the installation of *travelers* (rollers) on the bottom of each of the insulators using helicopters or aerial man lifts. The rollers allow conductor to be pulled through structure cross arms. Stringing equipment (Wire tensioner, puller, reel truck) is set up on either end of a pull at two stringing sites that are approximately 35-feet wide by 50-feet long. Depending on the topography, minor grading or brushing (vegetation removal) may be required at each site to create level work areas for equipment.

A *sock line* (a small cable used to pull the conductor) is then pulled onto the rollers from structure to structure using helicopters or bucket trucks. Once the sock line is in place, it is attached to the conductor and used to pull (or string) the conductor into place on the rollers using conventional tractor-trailer pulling equipment located at each conductor pull site. The conductor is pulled through each structure under controlled tension to keep it elevated and away from obstacles, thereby preventing third-party damage to the line and protecting the public.

After conductor is pulled into place, the conductor sag between the poles is adjusted by accessing each structure pole top. All overhead conductors would be sagged and spaced with ground clearances that meet or exceed the requirements specified in CPUC General Order No. 95 (1997). Conductor would be installed with a minimum ground clearance of 30 feet or 25 feet where there is pedestrian-only access.

Insulators would be installed on the new 230-kV poles using either a dead-end or a V-string configuration (for tangent structures – see Figure 2-5b).

After sagging, the conductor is clipped into the end of each insulator, the rollers are removed, and vibration dampers and other accessories are installed. The proposed optical ground wire would be strung at the top of the proposed 230-kV structures in a similar manner.

It typically takes approximately 5 hours (about half a workday) to pull three conductor cables (one complete circuit) through one side of the double-circuit structures along a 12,000-foot section of a transmission line route when a helicopter is used. Helicopter use for wire stinging and other activities if described in Section 2.4.6, "Helicopter Use."

2.4.5.4 Removal of Existing Poles

Existing transmission line poles and components (e.g., cross arms and insulators) would be dismantled by crane or helicopter and hauled away by truck. After the poles have been removed, concrete foundations (where present) would be jackhammered to below grade, and debris would be removed. Where the pole is direct buried and no foundation is present, the poles would be completely removed. If a pole cannot be pulled from the ground, it would be cut into sections from the top down to a point located 6 to 12 inches below the surface. If necessary, poles may be cut at or slightly above ground level to avoid impacts to sensitive resources. The remaining hole would be backfilled with clean fill soil or ground materials similar to those in the immediate area of the hole, and the site would be restored (see Section 2.6.1.4, "Other Environmental Procedures and Protocols," under the, "Cleanup and Restoration," heading).

Transmission pole removal would be completed from existing maintenance pads at the existing pole sites. A permanent disturbance area would not be maintained at the existing pole sites other than areas that overlap with maintenance pads for the proposed poles. Existing access roads would be used to remove each of the poles.

The applicant would remove conductor using methods similar to the conductor installation process (wire stringing) but in reverse. Old conductor would be wound onto conductor spools. Old poles, associated hardware, conductor, and debris would be removed from the site and placed on flatbed trucks for recycling or disposal in accordance with all applicable laws (Section 2.4.3.6, "Waste Disposal and Recycling").

2.4.5.5 Underground Installation

Trenching (Open Cut)

The majority of the underground conduit would be installed using open-cut trenching techniques. Most of the proposed conduit would have a double-circuit vertical configuration (Figure 2-6). Flat-duct configurations may be used in congested underground areas or to facilitate the transition to an overhead position.

Single-circuit transmission line trenches would be approximately 7-feet-deep and 3-feet-wide, and trenches for double-circuit, vertical conduit-bank installations would be approximately 8-feet deep and 3-feet wide. It is anticipated that double-circuit vertical, underground conduit-banks would be installed along Transmission Line Segment 2. Trench depth would vary depending on soil stability and the presence of existing substructures. The trench would be widened and shored where necessary to meet California Occupational Safety and Health Administration safety requirements. Once installed, the depth

from grade to the top of the concrete duct package would be approximately 2.5 feet, and the depth from grade to the top of the conduit in the duct package would be approximately 3 feet.

Jackhammers would be used if necessary to break up concrete that saw-cutting and pavement-breaking machines cannot access. Backhoes would be used to excavate trenches. Road graders and roller construction vehicles, grinders, vibrating plates, and other equipment would be used to repair and repave streets. Water trucks, loaders, bobcats, air compressors and generators, and standard 1-ton pickup trucks would also be used. Where trenching would occur within public roadways, traffic control would be implemented pursuant to local permit requirements.

Trenching operations would be staged so that a maximum of 300 to 500 feet of trench is left open on a street at any one time or as allowed by local permit requirements. Approximately 400 cubic yards per day of excavated material would be generated for each 300 to 500 feet of excavated trench. While the completed trench sections are being restored, additional trench sections would be excavated. This process would continue until trenching is completed. If trench water is encountered, trenches would be dewatered using a portable pump, as described in Section 2.4.5.3, “Foundations, Assembly, and Wire Stringing” and disposed of in accordance with acquired permits.

Conduit Installation and Backfill

After trenching, the applicant would install conduit to house the electrical cables and pour concrete around the conduit to form duct banks. Eight-inch-diameter PVC conduit would be installed. Additional ducts for communication cables required for electrical system protection and communication purposes would be installed in the same trench as the conductor cables.

Excavated material would be used to backfill each trench after installation of the duct banks (it is not anticipated that additional backfill would be required). The remainder of the excavated material would be spread across the ROW or access roads, if possible, or disposed of at an approved facility after testing to determine if hazardous materials are present (Section 2.4.3.6, “Waste Disposal and Recycling”). Road base backfill or a slurry concrete cap would be installed after backfilling with excavated materials, and disturbed road surfaces would be restored in compliance with local permits. Each bank of conduit (duct bank) would have a minimum of 36 inches of backfill cover.

Where a duct bank would cross or parallel other substructures that have operating temperatures at earth temperature, a minimum radial clearance of 18 inches is required. Such substructures include gas lines, telephone lines, water mains, storm drains, and sewer lines. Where a duct bank would cross or parallel other substructures that have operating temperatures that substantially exceed earth temperature, an increased radial clearance may be required. Such heat-radiating facilities may include other underground electrical circuits, steam lines, or heated oil lines. In addition, increased radial clearance may be required where a duct bank would cross heat-radiating substructures at right angles. Larger trenches would be excavated where vaults are installed.

Vault Installation

The applicant would excavate and place precast concrete splice vaults in regular intervals during trenching for conduit installation (Figure 2-6). The vaults would be used initially to pull cables through the conduits and later to splice cable together. During operation, the vaults are used access underground cables for inspection, maintenance, and repair. The vaults would be constructed of prefabricated or cast-in-place, steel-reinforced concrete. Each vault would have one or two manhole covers measuring approximately 36 inches in diameter. The installation of each vault would occur over a one-week period, with excavation and shoring of the vault pit followed by delivery and installation of the vault, filling and

compacting of backfill, and repaving the excavated area. In some cases, concrete would be used as backfill and soil backfill would not be required.

Cable Pulling, Slicing, and Termination

Each conductor section would be pulled into conduit from a splice vault to a second splice vault, or a cable pole structure. A cable reel would be placed at the first splice vault, and a cable-pulling rig would be placed at the subsequent splice vault or cable pole along the route. Prior to pulling conductor through the conduit, a rope would be pulled through using a fish line attached to the cable puller. The cable puller would then pull the rope, which would be attached to the conductor cable. Lubricant would be applied to the conductor as it enters the conduit to decrease friction during pulling. Once the conductor is pulled through to the second splice vault along the route, it would be spliced to a new conductor section on a cable reel, and the process would repeat from splice vault to splice vault until the underground conductor reaches a substation or a transition area where the conductor converts to overhead installation.

Jack and Bore Trenching

The jack and bore underground construction method would be used to install new underground conduit beneath Camino Capistrano and under the railroad tracks, west of the proposed San Juan Capistrano Substation (see Appendix C, Segment 1a). The jack and bore method pushes a steel casing through the soil, removing excess soil with a rotating auger (Figure 2-~~8~~9). Steel conduit approximately 36 inches-wide would be installed.

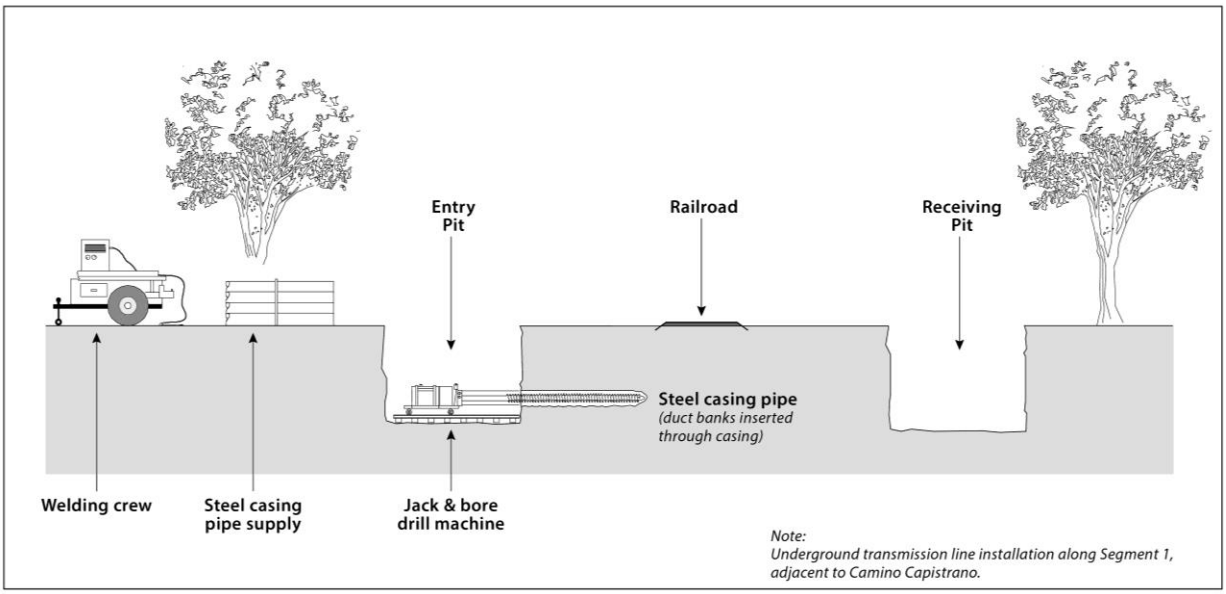

Figure 2-~~8~~9 Jack and Bore Trenching

The following steps summarize the jack and bore construction process:

1. A bore pit would be excavated on one side of the area to be bored, and a receiving pit would be excavated on the opposite side. The bore pit would be approximately 40-feet long by 12-feet wide by 15-feet deep, and the receiving pit would be approximately 20-feet long by 12-feet wide by 15-feet deep.
2. Boring equipment would be placed within the bore pit. Boring equipment is used to insert (to push) a steel casing through the soil. Water may be used (depending on site-specific soil

conditions) to lubricate the casing as it is pushed through the soil. The pieces of casing are welded together in segments as they are inserted.

3. Once the full length of casing is inserted, extending from the bore pit to the receiving pit, duct banks are inserted through the casing.
4. The inserted duct banks would be connected to transmission line duct banks located outside the bored area, and then the bore pit and receiving pits would be backfilled.

Jacking and receiving pits for the construction of the underground conduit would be at least 25 feet from the centerline of the nearest track, in compliance with SCRRA Engineering Standard 5001. The depth below ground surface of steel casing installation would be determined by local requirements. At the proposed jack and bore location, railroad requirements for depth below the existing railroad tracks would also apply.

2.4.6 Helicopter Use

Depending on site accessibility, safety considerations, and the construction schedule, helicopters may be used instead of ground equipment to complete transmission line structure assembly and erection; wire stringing; and structure removal activities described in Section 2.4.5, "Transmission Line Construction and Removal." Helicopters may also be used to transport crews and materials. Helicopters are not anticipated to be used for construction of 12-kV distribution structures. Final use of helicopters during construction is not known until the transmission line construction contractor is identified and the project design is finalized.

The applicant anticipates that helicopters may be used for wire stringing along the alignment and other construction activities (such as structure installation or removal). The applicant has preliminarily identified that helicopter usage could occur at (but not necessarily be limited to)structures sites Nos. 11 to 15, 20 to 42, 1b, 14a, and 20a. The following types of helicopters could be used during construction of the proposed project:

- *Heavy Duty (Type 1)*: Erickson Aircrane, Boeing CH-47, or similar helicopter models would be used for heavy lift operations (e.g., tower structures, steel monopoles, construction equipment delivery, wire spool delivery) with weights in excess of 11,000 pounds.
- *Medium Duty (Type 2)*: Sikorsky S-61, Bell 205/212, or similar helicopter models would be used for medium lift operations (e.g., drilling equipment, water trailers, fire buckets, wire-stringing equipment) with weights ranging from 6,000 to 11,000 pounds.
- *Light Duty (Type 3)*: AS350, MD500, KMAX, or similar helicopters would be used for light lifts and for wire stringing and personnel transport.

Typically, helicopters are used for about half of a workday to string approximately 12,000 feet of a transmission line route. Helicopters are not generally needed for wire stinging again for two to three weeks or until the next section of line is ready for stringing. The applicant anticipates that wire stringing for the proposed project would take approximately one year and that helicopter use would occur intermittently. Throughout the year, helicopters would be used for approximately 168 hours of rotor time to support the proposed 230-kV stringing activities. Helicopters would be used for additional periods as needed for structure installation and removal. Up to three helicopters may be used in a single day if wire stringing occurs along multiple transmission line sections on the same day that a helicopter is in use for pole removal and installation. Further discussion about how helicopters are used for structure removal,

installation, and wire stringing is provided in Section 2.4.5.3, "Foundations, Assembly, and Wire Stringing."

Helicopters would only be used during daylight hours, and helicopter flight paths would be limited to existing transmission line ROWs except for ingress and egress from airports or helicopter fly yards. The applicant would prepare a Helicopter Lift Plan that may include, among other sections, Project Helicopter Operations; General Use Restrictions and Regulatory Compliance; Landing Areas; Personal Protective Equipment; Landing Zone Limitations; Performance Planning and Weight and Balance; Fire Prevention Procedures; and Congested Area Plans.

2.4.7 12-kV Distribution Line Construction

The following discussion provides an overview of the general methods that would be used to construct the proposed overhead and underground distribution lines. The methods used at each worksite would be similar to those described below but may vary based on final engineering designs for the proposed project. For a complete list of construction equipment required for distribution line construction, refer to Appendix F.

Direct-Bury Steel Pole Installation

Each of the proposed 12-kV structures would be installed directly into auger holes except for Structures D2 through D5, which would require foundations. Structures D2 through D4 would be taller (Table 2-4) and would support overhead 12-kV conductor that would cross I-5. Foundation construction is discussed in Section 2.4.5.3, "Foundations, Assembly, and Wire Stringing."

To direct-bury steel poles holes, an area 20-inches to 48-inches in diameter and 7-feet to 12-feet deep would be excavated, depending on the height of the pole. The holes would be excavated using a small truck-mounted or track-mounted drilling rig. New poles would be delivered to the worksite by a flatbed truck. Assembly and erection would be similar to the description provided in Section 2.4.5.3, "Foundations, Assembly, and Wire Stringing," for the proposed transmission line poles, but helicopters would not be required. Crane and boom/bucket truck sizes would vary depending on the height of the pole. All distribution pole holes would be backfilled and compacted with the previously excavated soil. Remaining excavated material would be placed around the holes or spread onto access roads and adjacent areas.

Distribution Line Stringing

Distribution line stringing would similar to transmission line stringing, but helicopters would not be required. Conductor would be installed with a minimum ground clearance of 25 feet or 17 feet where there is pedestrian-only access per General Order 95 standard. Bucket trucks would be used instead of temporary guard structures at road crossings or flaggers would be used to halt traffic for brief periods while overhead conductor is installed. Insulators with stringing sheaves would be installed on the distribution structures. Sheaves are rollers that temporarily attach to the lower end of the insulators to allow conductor to be pulled along the line. A rope would then be pulled through the rollers from structure to structure. The rope would be pulled through the rollers using a bucket truck or aerial man lift.

Once the rope is in place, it would be attached to a steel cable, then pulled back through the sheaves and into place using conventional tractor-trailer pulling equipment located within a conductor pulling site. The conductor would be pulled through each structure under controlled tension to keep the conductor elevated and away from obstacles. In some cases, sleeves or splices may be installed overhead as described in Section 2.4.5.3, "Foundations, Assembly, and Wire Stringing," for transmission line

stringing when stringing operations slightly damage the conductor or the conductor is not long enough and must be joined to another segment. After the conductor is pulled into place, the sag between the structures would be adjusted. The conductor would then be attached to the end of each insulator, the sheaves would be removed, and the vibration dampers and other hardware accessories would be installed.

If distribution conductor is damaged during stringing, a section of the conductor may be replaced or a repair sleeve may be wrapped around the outside of the conductor and pressed into place to protect the conductor. The applicant would use full-tension splices or compression splices when conductor is damaged too severely for a repair sleeve, when the conductor is not long enough to span between structures, or if pulling sites are too far apart. For full-tension splices, two ends of conductor are connected with the use of heavy-duty vices.

Underground Distribution Line Installation

Underground distribution lines would be installed in a duct bank composed of two to eight 5-inch-diameter PVC conduit, along with manholes/handholes that would be comprised of concrete, and backfilled with sand, or native fill. Trench depth would be determined based on site-specific topography and soil conditions, but it is anticipated that the trenches would be 6 feet deep and 2.5 feet wide. To facilitate cable pulling and splicing, pre-formed, steel-reinforced, precast concrete splice vaults measuring approximately 8 feet long, 5.5 feet wide, and 7 feet deep would be installed in-line with the underground duct banks every 500 to 800 feet. Splice vaults would be delivered to the associated work areas on flatbed trucks and lowered into place using small, truck-mounted cranes.

After conduit installation, concrete would be poured around the conduit to form duct banks. The depth from grade to the top of the concrete duct package would be approximately 2.5 feet, and the depth from grade to the top of the conduit in the duct package would be approximately 3 feet. Conductor cables would be installed in the duct banks upon completion of the duct bank installation. Each cable segment would be pulled into the duct bank and terminated at the cable-riser pole where the line converts to an overhead configuration. Trenching, conduit installation, vault installation, cable pulling, and splicing is further discussed in Section 2.4.5.5, “Underground Installation,” which addresses the installation of underground transmission lines.

Distribution Pole Removal

The existing wooden distribution poles would be completely removed where possible. Poles that cannot be pulled from the ground or that are in environmentally sensitive areas with no bucket truck access, would be cut into sections from the top down to a point located 6 to 12 inches below the surface. Refer to Section 2.4.5.4, “Removal of Existing Poles.”

2.4.8 Staging Areas, Stringing Sites, Work Areas, and Helicopter Fly Yards

The following types of work areas are discussed in this section:

- *Staging Areas:* Temporary material and equipment storage yards and worker meeting sites;
- *Laydown Areas:* Temporary distribution or transmission line pole work areas or areas where pole components may temporarily be situated for assembly;
- *Maintenance Pads:* Permanent work areas maintained at most transmission line pole sites and some distribution line pole sites (for the larger poles) that provide a safe work area for the use of vehicles, equipment, and materials by personnel during maintenance activities;

- *Clearance Areas:* Areas maintained free of vegetation around each distribution and transmission line pole;
- *Stringing Sites:* Conductor cable (wire) pulling equipment sites, tensioning equipment sites, reel sites, and splicing sites required for stirring conductor on overhead structures; and
- *Helicopter Fly Yards:* Areas that helicopters fly to and from while carrying out construction activities. Helicopters would load, unload, land, and refuel at designated fly yards. Helicopter fly yards are designated at specific staging areas outside of transmission line ROWs and at specific laydown areas (work areas) within transmission line ROWs. Each helicopter fly yard would be an approximately 100-foot-by-100-foot areas located within a staging area, at one of the applicant's permanent storage areas at a substation site, or at an airport.

2.4.8.1 Staging Area

Construction of the proposed project would require temporary staging areas to store construction equipment, construction materials, and excavated materials. Listed in Table 2-11 and shown in Figure 2-1, are the seven staging areas that the applicant has identified during construction.

Table 2-11 Proposed Staging Areas

Staging Area No.	Staging Area Name	Staging Area Location	Staging Area Size (in acres)
1	Juliana	At the eastern terminus of Juliana Farms Road, San Juan Capistrano	2.45
2	Prima	At the Prima Deschecha Landfill	0.94
3	La Pata	East side of Avenida La Pata near Vista Hermosa Sports Park, San Clemente	0.97
4	Del Cerro	Southwest of the intersection of Calle Del Cerro and Avenida Vista Montana in San Clemente	2.59
5	Toll Roads	At the eastern terminus of Corte Cristianitos, San Clemente	1.63
6	Vista Montana	Northwest of the intersection of La Pata Avenue and Vista Montana, San Juan Capistrano	1.54
7	Alternate Prima Staging Yard	At the Prima Deschecha Landfill	2.08

Staging areas would be enclosed by a chain link fence that is at least 6-feet high and has a locked gate. The Capistrano and Talega substation sites would also be used as staging areas. Additionally, the applicant's storage areas at Margarita and Rancho Mission Viejo Substations (Figure 1-1) and the following substations that are each located from 45 to 75 miles southeast of Talega Substation: Peñasquitos, Clairemont, Kearny, and Miguel substation may also be used for staging areas. Staging areas for the proposed 12-kV distribution line work would be the same as those for the proposed transmission line work.

All staging and work areas would be cleared of vegetation. Mowers and bulldozers would be used to clear the areas. Depending on local topography, these areas may be graded flat or in a terraced fashion. Soil may be imported, as necessary, to raise the elevation of work areas. Forklifts; cranes; truck-mounted cranes; flatbed trucks with lifting booms; dump trucks; loaders; delivery trucks; 2-ton flatbed trucks, specialized rigging, reel, tool vans, and mechanic trucks; and standard 1-ton pickup trucks would be used to load and unload equipment at staging areas.

2.4.8.2 Laydown Areas, Maintenance Pads, and Clearance Areas

Construction would also require temporary laydown areas (work areas) in proximity to each of the proposed transmission line pole sites. Permanent work areas (maintenance pads) would be maintained at most pole sites. In addition, new access road segments would be constructed or and existing segments would be improved. All access roads would be maintained permanently. Access road construction areas are further discussed in Section 2.4.5.1, "Access Road Construction." Construction vehicles and equipment would be parked in proximity to work areas. Large equipment may be left on site overnight.

Each of the proposed 230-kV, 138-kV, and 69-kV steel poles and four of the steel distribution poles (proposed pole Nos. D2 through No. D5 at the proposed I-5 crossing) would require, at maximum, 150-foot by 150-foot (0.5-acre) laydown areas. The poles are typically installed near the center of the laydown area. Maintenance pads would be approximately 35 feet wide by 70 feet long (0.06 acres). In some cases, laydown areas and maintenance pads for different pole sites would overlap. A 30-foot-diameter radial clearance area would be maintained free of vegetation around the base of each transmission pole for maintenance and inspection activities. The clearance area around each distribution line pole would be 8 feet to 10 feet in diameter. Each of the proposed staging areas, stringing sites, and ~~temporary~~ laydown areas result in temporary impacts;~~,~~ ~~permanent~~ maintenance pads, pole sites/permanent clearance areas, and access roads result in~~are shown~~ permanent impacts~~in~~ (Appendix C).

2.4.8.3 Stringing Sites

Installation of the overhead transmission lines would also require approximately 23 wire-stringing sites. Stringing sites are typically required every 1 to 4 miles along transmission lines. Transmission line stringing is described in Section 2.4.5.3, "Foundations, Assembly, and Wire Stringing." Large wire-stringing equipment may be left overnight at stringing sites during active construction. Pull and tension equipment typically remains in place for up to five days per pull per segment.

2.4.8.4 Airports and Helicopter Fly Yards

No airports or airstrips, public or private, are located within 2 miles of components of the proposed project. Airports that may be used for helicopter staging and landing zones for material pickup may include:

- Oceanside Airport (approximately 26 miles southeast of Talega Substation);
- Palomar Airport (approximately 32 miles southeast of Talega Substation); and
- Gillespie Field Airport (approximately 55 miles southeast of Talega Substation).

The applicant has identified the following helicopter fly yards:

- Staging area at Prima Deschecha Landfill (Staging Area 2; Figure 2-1);
- Storage area immediately south of Margarita Substation (Figure 1-1);
- Storage area immediately west of Rancho Mission Viejo Substation (Figure 1-1); and
- Open space north of Talega Substation, where Avenida Pico becomes Cristianitos Road (Staging Area 5; Figure 2-1).

In addition, it is assumed that helicopters may land or be refueled at Staging Areas 1 to 3 (Figure 2-1) or at the applicant's substation sites identified above in Section 2.4.8.1, "Staging Areas at the Applicant's Substation Sites."

If, during final engineering, the applicant determines that staging areas or helicopter fly yards other than those evaluated in this EIR would be required, additional environmental analysis pursuant to the California Environmental Quality Act (CEQA) may be required.

2.4.9 Roadway and Railway Crossings and Road Closures

The proposed transmission line route would cross a number of roadways, including I-5 (Table 4.15-1). The applicant would adhere to the requirements of encroachment permits for highway, railway, and roadway crossings from Caltrans, Metrolink/Amtrak, and local jurisdictions, as required. Guard structures would be installed and traffic control used, as required, depending on the size of road crossed and permit requirements (Section 2.4.5.3, "Foundations, Assembly, and Wire Stringing"). The applicant would coordinate with local jurisdictions to ensure access for emergency vehicles. A Draft Traffic Control Plan is provided in Appendix Q.

The applicant anticipates that traffic would be temporarily stopped when the sock line is flown by helicopter over a public road. A sock line is used for stringing conductor cable on utility poles (Section 2.4.5.3, "Foundations, Assembly, and Wire Stringing"). Traffic would also be temporarily stopped in the event that an external load, such as the section of a transmission line structure, is flown by helicopter over a public road. The temporary traffic stops would last a few minutes.

Interstate 5 Overhead Crossing

I-5 is located approximately 1,000 feet east of the proposed San Juan Capistrano Substation. The proposed double-circuit 230-kV transmission line route and 12-kV distribution line routes would cross I-5 (Figure 2-1). The applicant would procure a permit from Caltrans to string new conductor across I-5. All guard structure usage, traffic stops, and timing restrictions would be conducted according to the specific Caltrans permit conditions. It would take approximately one week to complete the proposed construction activities at the I-5 crossing.

The applicant would acquire a permit from Caltrans to install safety netting across I-5 and across SR-74, if required. The applicant anticipates that the permit would require that the netting be installed early on a Sunday morning when traffic is minimal and that the California Highway Patrol would assist with slowing traffic to allow for netting installation. Once the netting is in place, wire stringing would be possible during periods with greater traffic levels as permitted. Permit requirements for netting removal would be similar to those for netting installation. Public notification would occur as required by the Caltrans crossing permit.

Underground Construction within Roadways and Railways

Transmission and distribution lines would be installed underground across or adjacent to roadways in several locations (Figures 2-1 and 2-2). All traffic control measures implemented for work in these locations would be consistent with the conditions outlined within the encroachment permit from the City of San Juan Capistrano. Where trenching is required, steel plating (trench plates) would be placed over open trenches to ensure safe vehicle and pedestrian crossing between construction periods (see Section 2.4.5.5, "Underground Installation").

Camino Capistrano, Calle San Diego, and Metrolink Railway

Overhead transmission lines would be replaced and transmission lines would be installed in new underground conduit west of Capistrano Substation across Camino Capistrano, a Metrolink rail line, Calle San Diego, and a grass-covered park area with a playground and volleyball court located within that applicant's existing ROW through an apartment complex (Segment 1a; Figure 2-1). Overhead transmission line installation, including the use of guard structures, and trenching for the installation of underground conduit would be completed as described in Section 2.4.5, "Transmission Line Construction and Removal."

Camino Capistrano is a busy four-lane arterial roadway that provides access to several schools in San Juan Capistrano. ~~Partial closure of the roadway would be required during the proposed construction activities, and full roadway closure may be required for short-term periods.~~ Full road closures of Camino Capistrano are not anticipated. The draft Traffic Control Plan provided by SDG&E's substation contractor includes temporary restriping Camino Capistrano to accommodate three lanes of travel during underground construction. The proposed construction activities along Camino Capistrano would take approximately 1.5 months.

A Metrolink rail line parallels the west side of Camino Capistrano. Jack and bore trenching would be required to install transmission lines under the railway as described in Section 2.4.5.5, "Underground Installation." ~~Calle San Diego is a two-lane collector roadway that parallels the west side of the Metrolink rail line. Partial or full closure of Calle San Diego would be required during the proposed construction activities, which would take approximately 2 weeks along Calle San Diego.~~

Vista Montana Road and Via Pomplona

Vista Montana Road is the entrance roadway to San Juan Hills High School and the Rancho San Juan residential development from La Pata Avenue. Partial closure of the four-lane Vista Montana Road would be required for approximately 8 months to install the proposed underground transmission lines. Traffic would be closed in one direction (two lanes) along Vista Montana Road for approximately 4 months, and then the opposite direction (two lanes) would be closed for 4 months. Via Pomplona, which intersects with Vista Montana, would be partially ~~or fully~~ closed for up to approximately 2 months. Via Pomplona is a two-lane road that provides one of the two entrances to the Rancho San Juan residential development from Vista Montana Road. An encroachment permit from the City of San Juan Capistrano would be required. In addition, new ROW would be obtained from Woodbridge Homes (Rancho San Juan residential development).

2.4.10 Final Engineering and Additional Environmental Analysis

The applicant completed preliminary geotechnical investigations in 2008 and 2012 at the Capistrano Substation site and along the proposed 230-kV transmission line route (Geosyntec 2012, URS 2012). The applicant would conduct site-specific, engineering-level geotechnical investigations of the approved substation site and transmission line route prior to construction of the proposed project.

Recommendations from the geotechnical investigations would be incorporated into the final design of the proposed substation, transmission lines, and 12-kV distribution lines. These recommendations may include increased grading; additional erosion, drainage, or landslide control measures; and deeper bore hole depth for foundations ~~(to a maximum of 40 feet)~~, among others. In instances where, as a result of refined engineering design, anticipated construction activities vary substantially from those described in the EIR, additional environmental analysis may be required.

2.5 Operation and Maintenance

The applicant would not alter its existing operations and maintenance protocols due to construction or operation of the proposed project. The applicant would continue to routinely inspect, maintain, and repair its transmission, distribution, and telecommunications lines and substations regardless of whether the proposed project is constructed. The applicant does not anticipate that operations and maintenance activities would increase in intensity, frequency, or duration because the proposed project would be constructed within the applicant's existing substation sites and transmission and distribution line corridors. Activities during operation of the proposed project would involve routine inspection and preventive maintenance to ensure service reliability and emergency work as needed to maintain or restore service.

No new staff would be required for operation and maintenance of the proposed San Juan Capistrano Substation, proposed modifications at Talega Substation, or proposed installation of transmission lines and 12-kV distribution lines. The applicant's existing staff would travel from the SDG&E's local service facilities to complete operations and maintenance activities.

2.5.1 Substation Operation and Maintenance

Capistrano Substation and Talega Substation are unstaffed, and the proposed San Juan Capistrano Substation would be unstaffed as well. The proposed substation would be inspected several times per week by the applicant's existing staff. Routine maintenance trips by a two- to four-person crew would occur approximately six times per year. Routine vegetation clearing would occur at the proposed substation as needed to maintain safety, access, and aesthetics. Vegetation clearing typically requires one or two light-duty vehicles and a few workers to trim and clear vegetation. Annual maintenance at the proposed substation would require approximately 10 workers for approximately one week. Operations and maintenance at Talega Substation would be the same as currently required.

2.5.1.1 Gas-Insulated Equipment (Sulfur Hexafluoride)

The insulating media in the proposed San Juan Capistrano's GIS equipment would be SF_6 gas, which is one of the four primary greenhouse gases (GHGs) defined by the Kyoto Protocol (see Section 4.7, "Greenhouse Gases"). The applicant estimates that approximately 21,640 pounds of SF_6 gas would be contained at the proposed San Juan Capistrano Substation. The applicant's protocols for maintaining GIS equipment—equipment that would be insulated with SF_6—are consistent with United Stated Environmental Protection Agency (USEPA) guidelines. For the proposed project, the GIS equipment would be certified by the manufacturer to have a SF_6 leak rate of less than 0.5 percent per year. The applicant anticipates, however, that equipment guaranteed by the manufacture to have a 0.1 percent per year leak rate would be installed.

The GIS equipment within the proposed substation would be electronically monitored from the applicant's central operations center. All equipment that uses SF_6 would be monitored for variations in pressure. An automatic alarm system would signal substation crews in the event of significant pressure changes. An electronic inventory of SF_6 bottles would be maintained of bottle weight, number, and SF_6 volume. Routine inventory inspections would be conducted to keep track of onsite stock and usage rates. The volume of gas in each piece of equipment would monitored, tracked, and recorded. Inspection sheets would be used to document the weight (lbs) and volume of SF_6 gas used, which piece of equipment SF_6 is used in, and which storage bottle the SF_6 came from.

The USEPA's rule, "Mandatory Reporting of Greenhouse Gases" (40 Code of Federal Regulations Part 98), requires mandatory reporting of GHGs. Subpart DD of this rule, "Electrical Transmission and Distribution Equipment Use," applies to SF_6 reporting from GIS substations. Pursuant to the final Mandatory Reporting Rule for Additional Sources of Fluorinated GHGs, owners and operators of electric power system facilities with a capacity that exceeds 17,820 pounds (7,838 kilograms) of SF_6 must report emissions from the use of electrical transmission and distribution equipment. Owners or operators must collect SF_6 emissions data, calculate GHG emissions, and follow specific procedures for quality assurance, missing data, recordkeeping, and reporting. The rule requires that each electric power system facility report total SF_6 emissions, including emissions from equipment leaks; during installation, servicing, decommissioning, and disposal; and from storage cylinders.

2.5.2 Transmission and 12-kV Distribution Line Operation and Maintenance

Transmission and distribution line operation and maintenance activities include security and other inspections, ROW and access road repairs, *pole brushing*—the removal of vegetation around poles—in accordance with firebreak clearance requirements, herbicide application, emergency and non-emergency repairs and replacements, and tree trimming. No on-road vehicle trips in addition to those currently required are anticipated for the proposed transmission and 12-kV distribution lines.

2.5.2.1 Helicopter Use during Operations

The applicant inspects the transmission line corridors between the Capistrano and Talega substation sites at least once per year by helicopters for safety and to maintain system performance. Additional inspection by helicopter may occur depending on the severity of weather events. Helicopters may also be used for repair work along transmission line routes in areas that have no vehicle access or with rough terrain. Corona discharge[25] inspections are completed annually by helicopter.

The applicant performs aerial and ground inspections of its distribution facilities at frequencies specified in General Order No. 165 (CPUC 2009) and reports inspection activities and results annually to the CPUC. Helicopter use by the applicant for inspection and maintenance activities is not anticipated to increase due to construction of the proposed project.

2.5.3 Fire Prevention during Operations

The applicant would maintain work areas around each of the proposed transmission line structures (minimum 15-foot radius/30-foot diameter) and 12-kV distribution line structures (minimum 4-foot radius/8-foot diameter) and under transmission and distribution lines clear of shrubs and other obstructions as specified in California Public Resources Code Sections 4292 and 4293 and CPUC General Order No. 95 (CPUC 1997). Pursuant to General Order 166 (CPUC 2012), the applicant prepares and updates annually emergency plans that include plans for the prevention of powerline fire ignitions during windy and high-temperature weather conditions in fire-prone areas.

In addition, the applicant would maintain access roads (14-feet to 20-feet wide) to each of the proposed transmission line structures and maintain work pad areas (approximately 35 feet by 70 feet) for maintenance purposes at most of the proposed structure sites. Clearance areas (30 feet in diameter) would

[25] Corona discharges are responsible for the crackling, hissing, or popping sounds associated with high-voltage transmission lines and may indicate the need for maintenance work. Ultraviolet camera sensors can be used to identify corona discharge areas. Corona noise is discussed further in the environmental setting and analysis provided in Section 4.11, "Noise and Vibration."

be maintained free of vegetation around each transmission line pole. Clearance areas would be at least 8 feet in diameter around each distribution line pole. Vegetation that has a mature height of 15 feet or more would not be allowed to grow within 10 horizontal feet of any conductor cable. Vegetation is maintained at specific distances (heights) below overhead conductor, as required by General Order No. 95. The minimum vegetation clearance for distribution and 69kV lines is 48 inches, and 120 inches for 138kV and 230kV lines. The applicant and its contractors would follow its Wildland Fire Prevention and Fire Safety Standard during operation and maintenance activities (see Section 2.6.1.3, "SDG&E Wildland Fire Prevention and Fire Safety Standard").

2.5.4 Water Use during Operations

Water would not be used to wash the proposed transmission lines because non-ceramic (polymer) insulators would be used. Restroom facilities would not be installed as part of the proposed project. Water would be used for routine equipment cleaning, worker consumption, and landscaping irrigation during operation and maintenance of the proposed project.

2.5.5 Nonhazardous Waste, Hazardous Waste, and Chemical Storage and Use

Each of the proposed San Juan Capistrano transformers would be filled with transformer oil (mineral oil). Refer to Section 2.4.3.1, "Nighttime Work," under the "Vacuum Filling" heading. Combined, the proposed transformers at San Juan Capistrano Substation would contain approximately 65,400 gallons of transformer oil. The existing transformers at Capistrano Substation contain approximately 17,100 gallons of transformer oil, combined. After construction of the proposed project, the amount of oil contained in the transformers at Talega Substation would be reduced from approximately 85,200 gallons to 51,900 gallons. Transformer spill containment basins would be installed. Oil removed from the transformers would be recycled.

Handling and disposal of all waste products associated with operation and maintenance activities would comply with all applicable laws and regulations.

2.6 Applicant Procedures, Plans, Standards, and Proposed Measures

In addition to the design of the proposed project described in this chapter, the applicant's existing procedures, plans, and standards would be followed. The applicant's existing procedures, plans, and standards are intended to ensure a consistent level of impact avoidance and minimization for all work carried out by the applicant or its contractors. The applicant would also implement a series of project-specific Applicant Proposed Measures (APMs). The APMs are presented in Section 2.6.2, "Applicant Proposed Measures."

2.6.1 Applicant Procedures, Plans, and Standards

The following procedures, plans, and standards are implemented by the applicant at the program level. They are not project specific and are implemented more or less uniformly throughout the applicant's various endeavors, operations, and practices. They are not necessarily evaluated and updated based on specific project types or scopes. They are intended to ensure a consistent level of impact avoidance and reduction for all work performed by that applicant or its contractors.

- SDG&E Natural Community Conservation Plan (NCCP);

- SDG&E Water Quality Construction Best Management Practices Manual;
- SDG&E Wildland Fire Prevention and Fire Safety Standard; and
- Other SDG&E environmental procedures and protocols.

2.6.1.1 SDG&E Natural Community Conservation Plan

The proposed project would incorporate the standard set of operational protocols and mitigation set forth in SDG&E's Subregional NCCP. The applicant has entered into an agreement with the United States Fish and Wildlife Service (USFWS) and the California Department of Fish and Wildlife (CDFW) to establish SDG&E's Subregional NCCP. SDG&E entered into an Implementation Agreement with the USFWS and CDFW, respectively, for the management and conservation of multiple species and their associated habitats as established according to federal and State Endangered Species Acts and the State's NCCP Act. The SDG&E's Subregional NCCP is a Habitat Conservation Plan as permitted under Section 10A of the federal Endangered Species Act for incidental take and an NCCP as permitted under a management authorization pursuant to Section 2835 of the California Fish and Game Code.

SDG&E's Subregional NCCP establishes a comprehensive, long-term, habitat-based agreement among SDG&E, the USFWS, and the CDFW for the management and conservation of multiple species covered in the plan and their associated habitat. It prescribes (as protocols) protection, mitigation, and conservation measures that SDG&E must implement. As such, the NCCP provides protection for those species while allowing SDG&E to develop, install, maintain, operate, and repair necessary electric and gas utility facilities in the plan area.

SDG&E's Subregional NCCP applies to all components of the proposed project, and the management and conservation of the biological resources within the proposed project area. SDG&E would conduct pre-activity surveys to evaluate the scope and nature of potential impacts in advance of construction or maintenance activities. The pre-activity survey results, when submitted, would initiate consultation with the USFWS and CDFW under established timeframes to identify potential impacts and feasible avoidance, minimization, and/or mitigation measures, as described in SDG&E's Subregional NCCP. Specific SDG&E Subregional NCCP Operation Protocols, Habitat Enhancement Measures, and mitigation that would be incorporated into the proposed project include the following (all section numbers in the following list refer to the SDG&E Subregional NCCP):

- Vehicles would be kept on access roads and limited to 15 miles per hour (Section 7.1.1, 1).
- No plants would be collected (Section 7.1.1, 2).
- Measures to prevent or minimize wild fires would be implemented, including exercising care when driving and not parking vehicles where catalytic converters can ignite dry vegetation (Section 7.1.1, 9).
- Field crews would refer all environmental issues, including questions regarding environmental impacts, to the Environmental Surveyor (Section 7.1.1, 10).
- All SDG&E personnel would participate in an environmental training program conducted by SDG&E, with annual updates (Section 7.1.2, 11).
- The Environmental Surveyor would conduct pre-activity studies for all activities occurring in natural areas, and would complete a pre-activity study form including recommendations for review by a biologist and construction monitoring, if appropriate. The form would be provided to CDFW and USFWS but does not require their approval (Section 7.1.3, 13).

- The Environmental Surveyor would flag boundaries of habitats to be avoided and, if necessary, the construction work boundaries (Section 7.1.3, 14).
- The Environmental Surveyor would conduct monitoring as recommended in the pre-activity study form (Section 7.1.4, 35).
- Fugitive dust would be controlled by regular watering and speed limits (Section 7.1.4, 39).
- New access roads would be designed and constructed according to the April 1991 "SDG&E Guide for Encroachment on Transmission Rights-of-Way" (Section 7.1.6, 46).
- No wildlife, including rattlesnakes, would be collected or harmed, except to protect life and limb (Section 7.1.1, 2 and 7).
- Feeding of wildlife is prohibited (Section 7.1.1, 4).
- No pets are allowed within the ROW (Section 7.1.1, 5).
- Littering is not allowed, and no food or waste would be left on the ROW or adjacent properties (Section 7.1.1, 8).
- Field crews would refer all environmental issues, including wildlife relocation, dead or sick wildlife, or questions regarding environmental impacts to the Environmental Surveyor. Biologists or experts in wildlife handling may be necessary to assist with wildlife relocations (Section 7.1.1, 10).
- Supplies, equipment, or construction excavations where wildlife could hide (e.g., pipes, culverts, pole holes, trenches) would be inspected prior to moving or working on/in them (Section 7.1.4, 37 and 38).
- During the nesting season, the presence or absence of nesting species (including raptors) shall be determined by a biologist who would recommend appropriate avoidance and minimization measures (Section 7.1.6, 50).

2.6.1.2 SDG&E Water Quality Construction Best Management Practices Manual

The applicant's Water Quality Construction BMPs Manual (SDG&E 2011) organize its standard water quality protection procedures for construction activities. The primary focus of most of the BMPs documented is to avoid or reduce water quality impacts during the construction of linear projects (e.g., transmission line construction). The BMPs were derived from several sources, including State of California water quality guidelines and Caltrans water quality BMPs. The applicant's BMP manual would be used during construction, operations, and maintenance of the proposed project to ensure compliance with all applicable government-mandated water quality standards.

2.6.1.3 SDG&E Wildland Fire Prevention and Fire Safety Standard

Construction and operation of the proposed project would be consistent with the SDG&E's Wildland Fire Prevention and Fire Safety Standard (Electric Standard Practice 113.1), which outlines practices and procedures for activities occurring within high risk and highest risk fire areas as designated by the applicant. These designations are applied to areas within the applicant's service area based on California Department of Forestry and Fire Protection (CAL FIRE) wildland Fire Threat Zone[26] boundaries.

[26] CalFire Fire Threat Zones are identified on maps and available within GIS data compiled by CalFire's Fire Resource and Assessment Program.

Segments 2 through 4 the proposed project (including the Talega Substation) would be constructed within the Fire Threat Zone (SDG&E High Fire Threat Zone).[27] No portions of the project are within the SDG&E wildland Highest Risk Fire Area as defined by the applicant.

2.6.1.4 Other SDG&E Environmental Procedures and Protocols

Traffic Control

The applicant anticipates that the traffic control plans required by agencies with jurisdiction over roadways that would be accessed by the proposed project would include measures to ensure that traffic flow is not completely restricted and that emergency access is maintained at all times. Traffic control notes are often included within a traffic control plans along with specific measures that directly or indirectly ensure that emergency access would be maintained. Example traffic control notes/measures could include:

- Emergency vehicle access shall be maintained at all times;
- During non-working hours, if possible, provide for use of the full roadway width that existed prior to construction;
- Due to peak volumes of pedestrian and vehicular traffic associated with schools, large vehicles or deliveries of large equipment shall not occur during the morning (approximately 7:30 to 8:00 am) when school children are dropped off and in the afternoon when school is let out (approximately 3:30 to 4:00 pm);
- Traffic control shall be in accordance with final engineering plans and approved drawings attached to the permit;
- When required, traffic shall be controlled by flaggers. Flaggers shall be in constant communication with each other during flagging operations; and
- All dirt and debris shall be removed from the roadway each day before the completion of work. Streets must be maintained in drivable condition at all times.

Cleanup and Restoration

All temporary disturbance areas (Section 2.4.2) would be restored to preconstruction conditions following construction of the proposed project. Restoration of all construction sites and structure removal sites would include, as appropriate, grading disturbed areas to original contours, reseeding, and revegetation. In addition to restoring landscaping and vegetation, the applicant would restore all removed curbs, gutters, and sidewalks and repave all removed or damaged paved surfaces. All construction materials and debris would be removed from the proposed project area and recycled or properly disposed of offsite. The applicant would conduct a final survey to ensure cleanup activities are successfully completed.

Additional Relevant SDG&E Procedures and Protocols

Other SDG&E environmental procedures and protocols include:

- Management of Contaminated Equipment and Materials, Hazardous Materials Business Plan;

[27] The SDG&E High Risk Fire Area is a contiguous area, which is also referred to as the SDG&E High Fire Threat Zone in Electric Standard Practice 113.1 (SDG&E 2012a).

- Addresses the evaluation of potentially hazardous materials that may be present due to former or present onsite uses as well as hazardous waste that may be generated during construction or operation of proposed land uses.

- Herbicides and herbicide application procedures; and
  - Used for the identification of SDG&E approved herbicides and identify measures for the proper application of herbicides during operation and maintenance activities.

2.6.2 Applicant Proposed Measures

The applicant has incorporated the measures presented in Table 2-12 into the design of the proposed project. The APMs are designed to take advantage of project design flexibility by avoiding or minimizing environmental impacts to the extent *feasible*. CEQA defines the term, *feasible*, as "capable of being accomplished in a successful manner within a reasonable period of time, taking into account economic, environmental, social, and technological factors."

Table 2-12 Applicant Proposed Measures

APM Number	Applicant Proposed Measure
Aesthetics	
AES-1	**Clean Work Areas.** During construction, SDG&E would keep construction activities as clean and inconspicuous as practical.
AES-2	**Restore Disturbed Areas.** When proposed project construction has been completed all disturbed terrain would be restored through recountouring and revegetation in order to re-establish a natural appearing landscape and reduce potential visual contrasts between disturbed areas and the surrounding landscape.
AES-3	**Visual Screening-San Juan Capistrano Substation.** The applicant would install landscaping and a screening wall would be installed in key areas along the perimeter of San Juan Capistrano Substation to partially screen views of substation structures and to visually integrate the new substation facilities with the existing setting. Figure 2-4 depicts the general location of new substation landscaping. Plant material would be appropriate to site-specific conditions and the local landscape setting. Landscaping would be consistent with technical requirements for proposed project operations and maintenance and would incorporate input from the City of San Juan Capistrano, local residents, and SDG&E's facility security.
Air Quality	
AQ-1	**Control Fugitive dust emissions.** The applicant would minimize fugitive dust by: • Using a gravel apron to reduce mud/dirt track out from unpaved truck exit routes. • Applying water to disturbed areas within a construction site. • Limiting the on-site vehicles to a 15 mph speed limit ~~enforced by radar~~ on unpaved roads. If necessary, SDG&E or its contractor(s) can install speed monitoring equipment at strategic locations and along project roads. • Requiring all trucks hauling dirt, sand, soil, or other loose material to be covered with a fabric tarp and maintain a freeboard height of 12 inches. • Applying a cover to storage piles when wind events are declared. • Requiring local streets to be swept by Rule 1186 compliant PM10 efficient vacuum units a minimum of once per month.
AQ-2	**Minimize NOx and PM emissions from off-road diesel-powered construction equipment.** Where available, SDG&E will ensure that all off-road diesel-powered construction equipment with engines greater than 50 horsepower (hp) are compliant with Tier 4 interim or Tier 4 off-road emissions standards, as specified by the phase-in schedule below: • 2015: 5% Tier 4 interim engines • 2016: 10% Tier 4 engines • 2017: 20% Tier 4 engines • 2018: 30% Tier 4 engines

Table 2-12 Applicant Proposed Measures

APM Number	Applicant Proposed Measure
	• 2019: 40% Tier 4 engines • 2020: 50% Tier 4 engines In the event equipment with a Tier 4/Tier 4 interim engine is not available for any off-road engine larger than 50 hp, that engine shall be operated with tailpipe retrofit controls that reduce exhaust emissions of NOx and PM to no more than Tier 3 emission levels. Equipment with an engine not compliant with the Tier 4/Tier 4 interim standard will be allowed only when the applicant has performed (and documented) a good faith effort (due diligence) to locate Tier 4 and/or Tier 4 interim equipment in the Project vicinity (defined as within 200 miles of the Project site). Use of older equipment (operated with tailpipe retrofit controls that reduce exhaust emissions of NOx and PM to no more than Tier 3 emission levels) would be allowable following due diligence and associated documentation that no Tier 4/Tier 4 interim equipment (or emissions equivalent retrofit equipment) is available for a particular equipment type. Each case shall be documented with written correspondence (or signed statement and electronic mail) by the appropriate construction contractor, along with documented correspondence from at least two construction equipment rental firms providing equipment within the defined project vicinity (200 miles). Documentation of due diligence will be submitted to CPUC staff for before equipment is used on the project. The applicant will make available to CPUC staff and/or construction monitors a copy of each piece of construction equipment's certified tier specification, BACT documentation, and/or CARB or SCAQMD operating permit, as applicable, at the time of mobilization of each applicable unit of equipment.
Cultural Resources	
CUL-1	**Worker Training for Cultural Resources.** Prior to the initiation of construction or ground-disturbing activities, all SDG&E, contractor, and subcontractor personnel would receive training regarding the appropriate work practices necessary to effectively implement the APMs and to comply with the applicable environmental laws and regulations, including the potential for exposing subsurface cultural resources and paleontological resources and to recognize possible buried resources. Training would inform all construction personnel of the anticipated procedures that would be followed upon the discovery or suspected discovery of archaeological materials, including Native American remains, and their treatment, as well as of paleontological resources.
CUL-2	**Cultural Resource Monitoring.** A qualified archaeologist would attend preconstruction meetings, as needed, and a qualified archaeological monitor would monitor ground disturbing activities in the vicinity of all known cultural resources within the proposed project area. The requirements for archaeological monitoring would be noted on the construction plans. The archaeologist's duties would include monitoring, evaluation of any finds, analysis of collected materials, and preparation of a monitoring results report conforming to Archaeological Resource Management Reports guidelines.
CUL-3	**Avoid Known Cultural Resources.** Known cultural resources that can be avoided would be demarcated as Environmentally Sensitive Areas. Construction crews would be instructed to avoid disturbance of these areas.
CUL-4	**Unanticipated Cultural Finds**. In the event that cultural resources are discovered, the archaeologist would have the authority to divert or temporarily halt ground disturbance to allow evaluation of potentially significant cultural resources. The archaeologist would contact SDG&E's Cultural Resource Specialist and Environmental Project Manager at the time of discovery. The archaeologist, in consultation with SDG&E's Cultural Resource Specialist, would determine the significance of the discovered resources. SDG&E's Cultural Resource Specialist and Environmental Project Manager must concur with the evaluation procedures to be performed before construction activities are allowed to resume. For significant cultural resources, a Research Design and Data Recovery Program would be prepared and carried out to mitigate impacts.
CUL-5	**Curate Cultural Discoveries**. All collected cultural remains would be cataloged and permanently curated with an appropriate institution. All artifacts would be analyzed to identify function and chronology as they relate to the history of the area. Faunal material would be identified as to species.
CUL-6	**Archeological Monitoring Results Report.** An archaeological monitoring results report (with appropriate graphics), which describes the results, analyses, and conclusions of the monitoring program, would be prepared and submitted to SDG&E's Cultural Resource Specialist, SDG&E's Environmental Project Manager, and the CPUC. Any new cultural sites or features encountered would be recorded with the SCCIC or SCIC.

Table 2-12 Applicant Proposed Measures

APM Number	Applicant Proposed Measure
CUL-7	**Monitoring by Native Americans.** Native American monitoring may be implemented if transmission line construction has the potential to impact identified and mapped traditional locations and places, Native American monitoring may be implemented. The role of the Native American monitor would be to represent tribal concerns and communicate with the tribal council. Appropriate representatives would be identified based on the location of the identified traditional location or place.
CUL-8	**Paleontological Monitoring.** A paleontological monitor would work under the direction of a qualified project paleontologist and would be on site to observe excavation operations that involve the original cutting of previously undisturbed deposits with high paleontological resource sensitivity A paleontological monitor is defined as an individual who has experience in the collection and salvage of fossil materials.
CUL-9	**Discovery of Fossils.** In the event that fossils are encountered, the paleontological monitor would have the authority to divert or temporarily halt construction activities in the area of discovery to allow recovery of fossil remains in a timely fashion. The paleontologist would contact SDG&E's Cultural Resource Specialist and Environmental Project Manager at the time of discovery. The paleontologist, in consultation with SDG&E's Cultural Resource Specialist, would determine the significance of the discovered resources. SDG&E's Cultural Resource Specialist and Environmental Project Manager must concur with the evaluation procedures to be performed before construction activities are allowed to resume. Because of the potential for recovery of small fossil remains, it may be necessary to set up a screen-washing operation on site. When fossils are discovered, the paleontologist (or paleontological monitor) would recover them along with pertinent stratigraphic data. In most cases, this fossil salvage can be completed in a short period of time. Because of the potential for recovery of small fossil remains, such as isolated mammal teeth, recovery of bulk sedimentary- matrix samples for off-site wet screening from specific strata may be necessary, as determined in the field. Fossil remains collected during monitoring and salvage would be cleaned, repaired, sorted, cataloged, and deposited in a scientific institution with permanent paleontological collections, and a paleontological monitoring report would be written.
CUL-10	The applicant proposes to take the following steps found in Council Policy 602, which applies to the alteration, modification, or demolition of "significant" structures: 1. Advertise for a period of three months that the former utility structure may be available for relocation. 2. Prepare a photographic record of the former utility structure. Photographs will include: a. Each elevation, b. Close-ups of any unusual or unique architectural features; and c. Views of the structure from a distance. In addition, measured drawings or plans will be included. 3. If not relocated, allow the removal of any architectural elements of the former utility structure for a period of two weeks at the expense of any local historic interest group or organization removing the element.
Geology	
GEO-1	**Conduct Geotechnical Investigation.** Conduct an Engineering-level Geotechnical Investigation for Liquefaction Potential and Implement Recommended Design Measures. A geologic hazard evaluation was conducted by URS in 2008 to evaluate the pole locations along the proposed project transmission line route for the presence of geologic hazards that may affect the new towers and poles The geologic hazard evaluation indicated the presence of geologic conditions potentially susceptible to liquefaction at the locations of proposed Pole Nos. 8, 9 and 10. Prior to construction, an engineering-level geotechnical investigation would be performed at these locations under the supervision of a California Certified Engineering Geologist or California licensed Geotechnical Engineer to further evaluate the liquefaction potential at each of these pole locations and to develop design measures to minimize the potential for damage to proposed project structures in the event of strong ground shaking. Recommendations of the geotechnical investigation would be incorporated into the final design for these structures. These recommendations would include augmented grading practices, expanded erosion control measures and deeper foundations.
GEO-2	**Geotechnical Landslide Survey.** Conduct an Engineering-level Geotechnical Survey for Landslides and Implement Recommended Design Measures to Ensure Slope Stability is not Impacted and the Potential for Damage to Protect Structures is Minimized. A geologic hazard evaluation was conducted by URS in 2008 to evaluate the structure locations along the proposed project transmission line route for the presence of geologic hazards that may affect the new towers and poles. The geotechnical hazard evaluation identified areas with recent and ancient landslides along the proposed project transmission line route due to unstable slope conditions in portions of both the Capistrano and Monterey

Table 2-12 Applicant Proposed Measures

APM Number	Applicant Proposed Measure
	formations. Prior to construction, an engineering-level geotechnical investigation would be performed at each pole location along the transmission line route that is in or near a mapped landslide or other unstable slope condition. This investigation would be performed under the supervision of a California Certified Engineering Geologist or California licensed Geotechnical Engineer, and would identify protection measures to be designed and implemented to ensure that the proposed project does not materially increase slope stability risks and to minimize potential for damage to proposed project structures in the event of landslides. These recommendations would include augmented grading practices, expanded erosion control measures and deeper foundations.
Greenhouse Gases	
GHG-1	**Operations Emissions Controls.** SDG&E developed this APM to ensure that sulfur hexafluoride is properly managed. SDG&E would implement its existing sulfur hexafluoride mitigation strategies during the operation and maintenance of sulfur hexafluoride-containing equipment installed as part of the proposed project. These strategies include: • Recording company-wide sulfur hexafluoride purchases, use, and emissions rates to comply with the USEPA's requirements for Electrical Transmission and Distribution Equipment Use (Mandatory Reporting of Greenhouse Gases, 40 CFR Part 98, Subpart DD) and the CARB's Regulation for Reducing Sulfur Hexafluoride Emissions from gas-insulated switchgear (Code Regs. Tit. 17, § 95350-95359); • Implementing a sulfur hexafluoride recycling program; • Training employees on the safety and proper handling of sulfur hexafluoride; • Continuing to report GHG emissions with the Climate Registry; and • Implementing SDG&E's sulfur hexafluoride leak detection and repair program. This program includes monthly visual inspections of each GCB, which includes checking pressure levels within the breaker and recording these readings in SDG&E's Substation Management System. During the installation or major overhaul of any GCB, the unit is tested over a 24-hour period to ensure no leaks are present. Minor overhauls of each GCB are conducted every 36 to 40 months to check overall equipment health. This process includes checking gas pressure, moisture ingress, and sulfur hexafluoride decomposition. If the GCB fails any of these checks, the unit is checked for leaks and repaired. In addition, all GCBs are equipped with a gas-monitoring device and alarm that automatically alerts SDG&E's Grid Operations Center. If gas pressure approaches minimum operating levels, an alarm is immediately reported to SDG&E's Substation Construction and Maintenance Department. The GCB is usually inspected for leaks within 24 hours of such an alarm. SDG&E's leak detection practice includes the following three methodologies: - Spraying a leak-detection agent onto common leak points—including O rings, gaskets, and fittings; - Using a field-monitoring device (sniffer) to detect the presence of sulfur hexafluoride gas; and - Using a laser-detection camera to detect the presence of sulfur hexafluoride gas when the above two methods are unsuccessful in finding a leak.
Hazards and Hazardous Materials	
HAZ-1	**Conduct Environmental Site Assessment.** Prior to the start of earth disturbance activities at the upper yard portion of the existing Capistrano Substation site, a Phase II Environmental Site Assessment (soil sampling) would be performed and, if any contaminated soil is found to be present, contaminated soils would be managed, removed, transported, and disposed of in accordance with all applicable laws, ordinances and safety standards. The Environmental Site Assessment would be completed pursuant to ASTM International standard requirements.
HAZ-2	**Hazardous Materials and Waste Management Plan.** The applicant would prepare a project-specific Hazardous Materials and Waste Management Plan (HMWMP) following final CPUC project approval and be submitted to the CPUC prior to issuance of any applicable Notice to Proceed for the project. Handling, recycling, and waste transportation, and temporary waste storage procedures would be outlined within the HMWMP. The project-specific HMWMP would include site-specific procedures and would be developed based on SDG&E standards and applicable hazardous materials laws, standards, and regulations. Sampling and cleanup levels would be established in the HMWMP as follows: • Confirmation samples would be taken to ensure that site conditions are consistent with current and proposed land uses (i.e., electric substation); • Confirmation samples would be taken, utilizing industry standard testing methods (e.g. EPA Methods), for appropriate site specific contaminants of concern;

Table 2-12 Applicant Proposed Measures

APM Number	Applicant Proposed Measure
	• Final sampling procedures would be included within the project-specific HMWMP; and • Final cleanup levels would be identified in the HMWMP and be consistent with acceptable levels for Commercial Industrial land uses. Plans for the unanticipated discovery of contaminated soil and/or groundwater during construction would be included in the HMWMP, including: • Procedures in response to the discovery of contaminated soil or groundwater, including those for stopping work, securing the contaminated area, preventing the spread of contamination, and appropriate waste management (testing, profiling, shipping disposal); • Training requirements for construction workers performing excavation activities; • Dewatering procedures; and • Procedures for notifying SDG&E and agency personnel in the event of the discovery of contaminated soil and/or groundwater. The applicant's outline of environmental procedures for management of the following would be addressed in the HMWMP: • Asbestos Management; • Hazardous Materials Transportation Security Plans; • Hazardous Materials and Waste Management; • Hazardous Material and Waste Shipping; • Hazardous Waste Minimization Plans; and • Field Guidelines for Emergency Incidents. Soil sampling and building materials sampling results from applicable Environmental Site Assessments would be applied to development of the HMWMP.
HAZ-3	**Personal Protection Equipment .** Specialized crews would be utilized to conduct any remediation (safe removal of contaminants) at the Capistrano Substation site prior to actual construction of the proposed project commencing. Proper personal protection equipment (PPE) would be utilized by all remediation workers that may come into contact with known contaminated soil or hazardous building materials. PPE would be determined based upon the nature of the contamination present at any given portion of the substation site and would comply with all applicable CalOSHA standards.
HAZ-4	**Dewatering, Discharge, and Contaminated Water.** Pumped water that is not potentially contaminated with sediments or other materials would be discharged in accordance with requirements of the Construction General Permit. The water would be discharged near the extraction location and thereby returned to the local groundwater. Potentially contaminated water would be handled and disposed off site in accordance with applicable federal and state laws.
HAZ-5	**Recycling and Reuse.** It is SDG&E's practice to reuse or recycle all old structures/poles, materials, and components following the retirement of substations, transmission lines, and structures/poles. Whatever cannot be reused or recycled is disposed of at an appropriate facility pursuant to all applicable laws.
HAZ-6	**Fire Control.** ~~No work~~Construction restrictions would occur during times of high fire threat such as Red Flag Warnings issued by the National Weather Service or other severe fire weather conditions as identified by SDG&E. Consistent with SDG&E's Electric Standard Practice 113.1 and the project-specific fire plan, prior to starting construction activities, SDG&E would clear dead and decaying vegetation from proposed project work areas where personnel are active or where equipment is in use or being stored within ROWs, staging areas, stringing sites, and access roads. Cleared dead and decaying vegetation would either be removed or chipped and spread on site. The project-specific fire plan would requirements for equipping diesel and gasoline operated engines with spark arrestors, carrying emergency fire suppression equipment, furnishing a water truck on or immediately adjacent to the proposed project work area, restricting smoking and vehicle idling, construction restrictions during Red Flag Warning periods (as applicable); and conducting pre-activity tailgate

Table 2-12 Applicant Proposed Measures

APM Number	Applicant Proposed Measure
	meetings that include fire safety discussions.
Noise	
NOISE-1	**Nighttime and Weekend Activities.** Any endeavors during the construction phase wherein nighttime and/or weekend activities are necessary (such as due to Caltrans transportation constraints for conductor stringing (I-5) or oversized/ overweight loads or CAISO outage constraints) would be limited to the extent feasible so that noise would not exceed the pertinent maximum noise level limits or the hourly L_{50} limits when measured at the nearest residential property. For example, to minimize potential noise disturbances during nighttime deliveries of transformers, the applicant would make every reasonable effort to minimize the duration of trucking activities at the project site. This would entail pulling delivery vehicles onto the project site, parking them overnight, and unloading/installing the item(s) during normal, daytime construction hours. If nighttime or weekend activities cannot be conducted to meet the city's noise standards, SDG&E would communicate the exception to the appropriate local agency at least 24 hours in advance of conducting work that may exceed the threshold(s).
Public Services and Utilities	
PS-1	**Recreational Facility Access.** Construction within existing public parks would not completely restrict access through the parks. Where necessary, SDG&E would create temporary foot and bicycle paths along with appropriate advanced notice and signage to direct and allow for the pedestrian and bicycle access through each affected park.
PS-2	**Repair Damage to Public Facilities.** All recreational facilities that are physically impacted during construction activities would be returned to an approximate pre-construction state, allowing for SDG&E operation and maintenance activities, following the completion of the proposed project. SDG&E would make replacements of any public damaged or removed equipment, facilities, and infrastructure, in a timely manner.
PS-3	**Roadway Repair.** SDG&E Contract Administrators oversee all aspects of construction and would ensure that contractors repair any damage caused by construction activities. Contract Administrators would also work with the customers and/or local agency to ensure repairs are sufficient and consistent with pre-construction conditions. Contractors working for SDG&E typically photograph and/or video document pre-construction conditions. At the completion of construction activities, this documentation is used to ensure that any damage that is caused by construction work is repaired.
Transportation and Traffic	
TR-1	**Avoid Traffic Near Schools.** Construction generated traffic associated with the San Juan Capistrano Substation and construction of the 138kV getaways (new underground cable packages and new Pole Nos. 1a through 7a) would avoid the start and ending time for the Saddleback Valley Christian School and the JSerra Catholic High School. Workers would arrive at construction sites by 7:30 AM and would not leave prior to 3:30 PM.
TR-2	**Avoid SR-74 Traffic.** Construction generated traffic associated with the San Juan Capistrano Substation and construction of the 138kV getaways (new underground cable packages and new pole Nos. 1a through 7a) would avoid the SR-74 off ramp from I-5. Avoidance of the SR-74 and I-5 interchange would ensure that construction generated traffic would not exacerbate existing conditions on the stretch of road between the intersections of SR-74 and Rancho Viejo Road and SR-74 and Del Obispo.
TR-3	**Emergency Access.** SDG&E would coordinate with local emergency response agencies during all construction within existing roadways. Coordination with local emergency response agencies (such as Orange County Sheriff's Department and Orange County Fire Authority) would ensure that impacts to emergency access are less than significant.
TR-4	**Off-Peak Deliveries.** Deliveries would be scheduled during off-peak traffic periods to reduce trips during the most congested periods of the day.
TR-5	**Material Removal, City Streets.** For any underground work along city streets, materials would be removed from work areas on a daily basis to minimize traffic impacts.
TR-6	**Helicopter Use.** When helicopters are in use for construction activities, designated fly yards would be kept clear of all other construction activity. If helicopters are used during construction of the proposed project, existing helicopter landing areas would be used wherever feasible. Helicopter landing areas along the existing ROW would be located away from residences and other land uses (generally at least one mile from sensitive noise receptors).
TR-7	**Traffic Control Plans.** Contractors working for SDG&E would develop specific traffic control plans immediately prior to the start of construction that adhere to the Standard Traffic Control Procedure from the authority having jurisdiction (federal, state, county, city, or municipality) of the roadway being impacted. The traffic control plans would be created for the various construction phases of the San Juan Capistrano Substation, underground transmission and underground

Table 2-12 Applicant Proposed Measures

APM Number	Applicant Proposed Measure
	distribution segments leaving the San Juan Capistrano Substation, and overhead transmission. The approved traffic control plans would describe lane closures and other methods for reducing adverse construction-related traffic impacts and require SDG&E to coordinate in advance with emergency service providers to avoid restricting movements of emergency vehicles, to ensure that emergency vehicle access is maintained and that impacts to traffic flow are minimized. All traffic control plans would be developed, reviewed and approved by the authority having jurisdiction of the specific roadway being impacted. The traffic control plans would include vehicular and non-vehicular traffic and would be communicated to the public at least 48 hours in advance of the traffic control measures being installed in the roadway or as required by the traffic control permit.

Source: SDG&E 2012b
Key: kV = kilovolt; SJC = Proposed San Juan Capistrano Substation site; Talega = Talega Hub/Corridor area and Substation; TL = Transmission Line; 12-kV = 12-kV Distribution Line

The applicant's environmental compliance management program is designed to ensure that APM implementation is monitored, documented, and enforced during the appropriate phases of projects (e.g., preconstruction, construction, operations, and maintenance). All of the applicant's contractors are contractually obligated to properly implement the APMs and ensure their effectiveness at avoiding or reducing environmental effects.

2.7 Permitting, Consultation, and Approval Requirements

Table 2-13 lists the federal, State, and local permits, consultations, and approvals that may be required for construction and operation of the proposed project.

Table 2-13 Permits, Consultations, and Approvals

Permitting, Consultation, or Approval Requirement	Agency / Group	Purpose/Description
Federal		
National Environmental Policy Act (NEPA)	United States Marine Corps Department of the Navy, United States Marine Corps	Consultation and approval by the lead NEPA agency for right-of-way modification within the United States Marine Corps' Camp Pendleton property.
Clean Water Act Section 404/Rivers and Harbors Act Section 10: Nationwide Permit	United States Army Corps of Engineers	Section 404 regulates discharge off 'fill' into "Waters of the United States" Section 401 requires that any applicant for a Section 404 Permit also obtain a Clean Water Certification from the state (see below).
Federal Endangered Species Act	United States Fish and Wildlife Service	Special status species survey and mitigation as required, take authorization (i.e., Incidental Take Permits, if required), and informal or formal consultation.
Federal Aviation Regulations Part 77 (Objects Affecting Navigable Airspace), Part 133 (Rotorcraft External-Load Operations)	Federal Aviation Administration	Consultation regarding objects that may affect navigable airspace. Consultation to determine whether Congested Area Plan approval for helicopter external-load operations is required.

Table 2-13 Permits, Consultations, and Approvals

Permitting, Consultation, or Approval Requirement	Agency / Group	Purpose/Description
State		
California Public Utilities Code Section 1001 et seq. and California Public Utilities Commission (CPUC) General Order No. 131-D	CPUC	CEQA review and overall approval of the proposed project including approval of a Certificate of Public Convenience and Necessity (CPCN) or CPCN exemption and approval of a Permit to Construct
Section 401 of the Federal Clean Water Act, National Pollutant Discharge Elimination System General Permit for Discharge of Construction Related Storm Water	State Water Resources Control Board	Management of storm water during construction, Notice of Intent required under Section 401
Section 1600 of the California Department of Fish and Game Code and Consultation	California Department of Fish and Wildlife	Streambed alteration agreement for construction in bed and bank of streams
Section 2081 of the California Endangered Species Act and Consultation	California Department of Fish and Wildlife	Special status species survey and mitigation requirements, take authorization (if required), and consultation for Section 2081 of the California Endangered Species Act
California Streets and Highways Code 660 to 711.21, California Code of Regulations 1411.1 to 1411.6	California Department of Transportation (Caltrans)	Caltrans requires that all work done within or spanning a state or interstate highway right-of-way (ROW) receive an encroachment permit. Permits are also required for oversize and/or overweight truckloads that exceed legal load limits as defined by the California Vehicle Code.
National Historic Preservation Act Section 106, California Register of Historical Resources, California Public Records Act	State Historic Preservation Office, Native American Heritage Commission	Consultation for Section 106 of the National Historic Preservation Act. Consultation regarding known cultural resources. Consultation regarding the listing of cultural or historic resources in the National Register of Historic Places or California Register of Historical Resources.
Local		
Permit to Construct, Permit to Operate, Permit for Alteration/Modification, Emission Reduction Credits, Rule 403 Permit (Fugitive Dust)	South Coast Air Quality Management District	Consultation and Permitting for air pollution, including fugitive dust and greenhouse gas emissions; Permits to Construct are for new or relocated equipment as well as alteration (both physical modification and change of operating conditions) of existing equipment
Section 401 of the Federal Clean Water Act, National Pollutant Discharge Elimination System General Permit for Discharge of Construction Related Storm Water	San Diego Regional Water Quality Control Board (Region 9)	As directed by State Water Resources Control Board, monitor development and implementation of Stormwater Pollution Prevention Plans and other aspects of the National Pollutant Discharge Elimination System permit and 401 certification program. SWPPPs are required for storm water discharges associated with construction activities that disturb more than 1 acre of land. Additionally, an MS4 permit for small storm sewer systems may be required, which would require a Storm Water Management Program.
Railroad Crossing Permit, Right of Way Encroachment, Right of Entry, Construction design and plans Approval	Metrolink/Amtrak/ Southern California Regional Rail Authority	Permission to install overhead conductor cable across railroad lines. Permission to construct within and under (jack-and-bore trenching) a railway ROW. Approval of design, construction, and construction staging plans prior to construction.
Demolition Permit	City of San Juan Capistrano	1918-built former utility structure demolition

Table 2-13 Permits, Consultations, and Approvals

Permitting, Consultation, or Approval Requirement	Agency / Group	Purpose/Description
Building Permit	City of San Juan Capistrano	New substation construction.
Grading Permit	Orange County, City of San Juan Capistrano, City of San Clemente	Grading for the proposed substation.
Encroachment Permit	Orange County, City of San Juan Capistrano, City of San Clemente	An encroachment permit is required any time there is work being done within the public ROW, including curb drains, lane closures, and utility trenches by utility agencies.

Source: Ecology & Environment, Inc.
Key: Caltrans = California Department of Transportation; CEQA = California Environmental Quality Act; CPCN = Certificate of Public Convenience and Necessity; CPUC = California Public Utilities Commission; NEPA = National Environmental Policy Act; ROW = right-of-way; SWPPP = Storm Water Pollution Prevention Plan

2.7.1 California Environmental Quality Act

The CPUC is the CEQA Lead Agency for review of the proposed project. SDG&E must comply with the CPUC's General Order 131-D, which contains Certificate of Public Convenience and Necessity permitting and CEQA-review requirements for the construction of the proposed project.

2.7.2 National Environmental Policy Act

Work proposed at the Talega Substation site and Talega Hub/Corridor area within San Diego County (Figure 2-1) would be located on land owned by the United States Marine Corps Marine Corps within its Camp Pendleton base. Marine Corps Base Camp Pendleton stated that activities occurring on Marine Corps Base Camp Pendleton may require an environmental review pursuant to the National Environmental Policy Act (NEPA).

This page intentionally left blank.