SECTION 1
Project Description

1.1 Introduction

Sierra Pacific Power Company (Sierra Pacific), in its California Public Utilities Commission (CPUC) application (A.06-04-017), filed on April 19, 2006, seeks a Permit to Construct (PTC) an approximately 3,500-foot power line of new 60 kilovolt (kV) circuit on an existing 12.5 kV distribution line in unincorporated Nevada County, near the town of Hirschdale, pursuant to CPUC General Order (GO) 131-D. The application includes the Proponents Environmental Assessment (PEA) (Sierra Pacific, 2006) prepared pursuant to Rule 2.4 of the CPUC's Rules of Practice and Procedure.

Sierra Pacific, who currently operates a single-circuit 60 kV electric power system in the Truckee-Reno area, requests to construct approximately 3,500 feet of new 60 kV single-circuit on an existing 12.5 kV distribution line. The entire proposed route would be located on an existing Sierra Pacific easement on private property. Under GO 131-D, approval of this project must comply with the California Environmental Quality Act (CEQA).

Under CEQA, the CPUC must prepare an "Initial Study" for discretionary projects such as the Proposed Project to determine whether the project may have a significant adverse effect on the environment. If an Initial Study prepared for a project indicates that such an impact could occur, the CPUC would be required to prepare an Environmental Impact Report (EIR). If an Initial Study does not reveal substantial evidence of such an effect, or if the potential effect can be reduced to a level of insignificance through project revisions, a Negative Declaration can be adopted (Public Resources Code, Division 13, Section 21080(c)(1)).

A Mitigated Negative Declaration (MND) may be adopted when "the initial study has identified potentially significant effects on the environment, but (1) revisions in the project plans or proposals made by, or agreed to by, the applicant before the proposed negative declaration and initial study are released for public review would avoid the effects or mitigate the effects to a point where clearly no significant effect on the environment would occur, and (2) there is no substantial evidence in light of the whole record before the public agency that the project, as revised, may have a significant effect on the environment" (Public Resources Code, Division 13, Section 21064.5).

This Initial Study/Mitigated Negative Declaration considers the potential environmental impacts from Sierra Pacific's Hirschdale Power Line Project (the Proposed Project).

1.2 Project Objective

Sierra Pacific's objective of the Hirschdale Power Line Project as stated in the Proponent's Environmental Assessment (PEA) (Sierra Pacific, 2006), is as follows:

> **Ensure transmission system reliability** – to ensure the area transmission system meets planning criteria by providing an alternative transmission path to the Glenshire Substation as the primary source is aging and difficult to maintain.

Normally, the Glenshire Substation is sourced via Sierra Pacific's 608 Line from Truckee, and backed up by this same line from the Reno Area. However, the Reno source was removed in 2004 as a result of intense development in west Reno, and because of the age and exposure of the 608 line as it traversed the Truckee River Canyon. The 608 Line from Reno is almost 28 miles long and approximately 70 years old. Sierra Pacific maintains that the 608 Line is difficult to access and maintain as it passes through the Truckee River Canyon. The 621 line from Truckee to Glenshire is approximately nine miles long and approximately 1 mile long from Glenshire to Hirschdale. Most of the 621 line has been rebuilt in recent years and the terrain is predominantly flat and accessible. Providing Glenshire Substation with an alternate source via the 621 line would result in more reliable system that would also be easier and less costly to maintain.

1.3 Project Location

The Proposed Project is located in eastern Nevada County approximately five miles east of Truckee, California (Figure 1-1). The Proposed Project route would be in an existing Sierra Pacific distribution line corridor generally paralleling local roads and traversing open space with sagebrush scrub vegetation, including scattered pine trees and pine woodland.

1.4 Existing System

Sierra Pacific currently serves the Truckee-Reno areas with a system of substations and electrical power lines as well as a small network of local distribution lines in the Truckee area. These distribution lines generally follow city streets and back property lines carrying lower voltage electricity from the substations to Sierra Pacific's residential and commercial customers. Figure 1-2 illustrate the local Sierra Pacific system.

1.5 Sierra Pacific Power Company's Proposed Project

Figure 1-3 shows the location and alignment of the Proposed Project which would connect Line 621 to Line 608 by installing approximately 3,500 feet of new 60 kV single-circuit on an existing 12.5 kV distribution line.

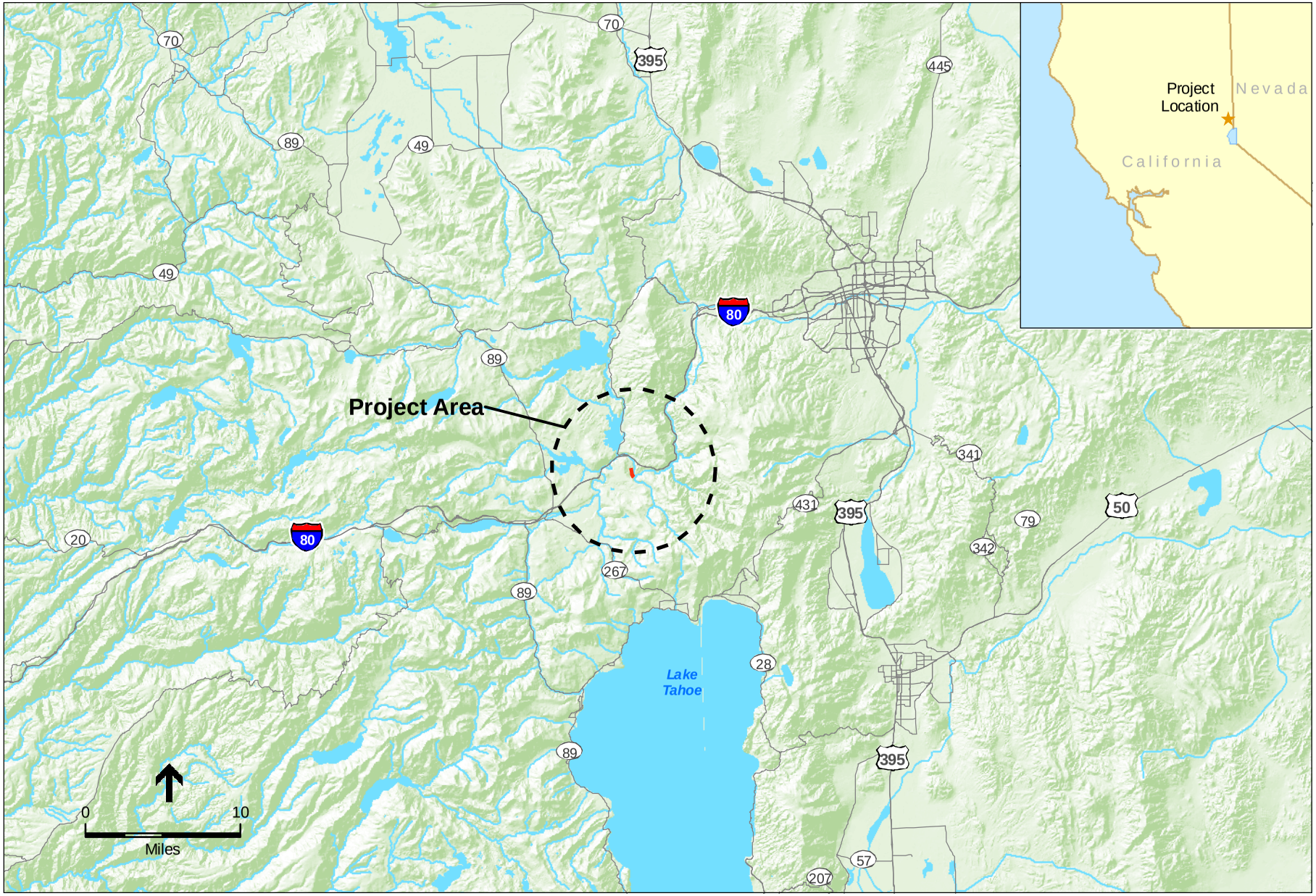

SOURCES: ESA (2006), ESRI (2006), Sierra Pacific (2005), USGS (1993)

Sierra Pacific Hirschdale Power Line Project . 206056

Figure 1-1
Vicinity Map

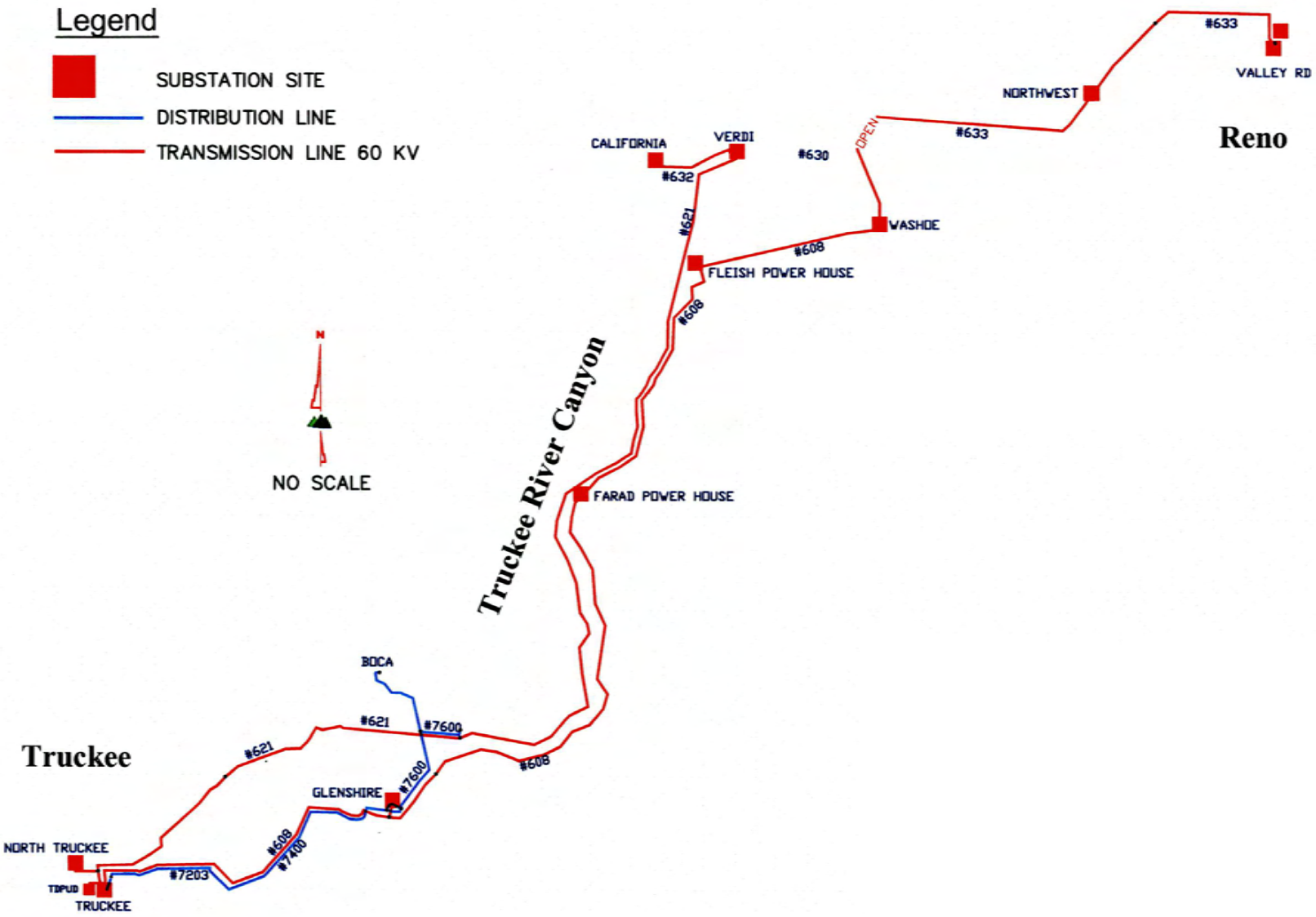

SOURCE: Sierra Pacific

Sierra Pacific Hirschdale Power Line Project . 206056

Figure 1-2

Sierra Pacific's Regional System

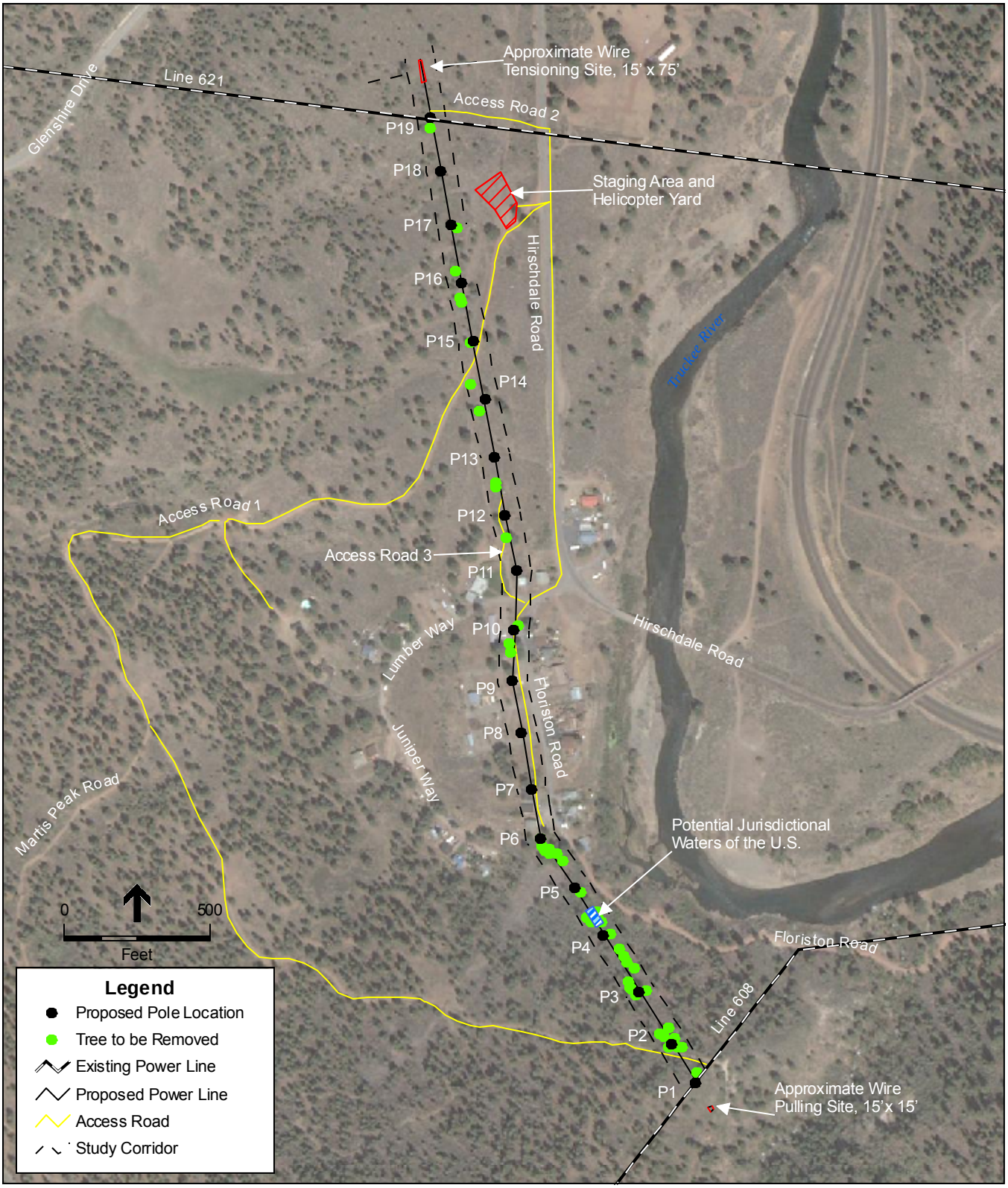

Sierra Pacific Power Company Hirschdale Power Line Project .206056

SOURCES: ESA (2007), GlobeXplorer (2006), Sierra Pacific (2006)

Figure 1-3
Project Area Map

1.6 Project Components

A summary of the key components of the proposed Hirschdale Power Line Project is provided Table 1-1, followed by a more detailed discussion by component.

TABLE 1-1
SUMMARY OF PROJECT COMPONENTS

60 kV Single Circuit Power Line
• Install new single-circuit 60 kV line from Line 621 to Line 608 (requiring approximately 19 new poles) • Install new conductors (three) and insulators • Transfer existing 12.5 kV single-circuit distribution to the new wood poles; remove existing wood poles • Voltage of new circuit: 60 kV alternating current • Pole Type: wood poles • Pole Height: generally 57.5 feet above the ground surface • Span between Poles: approximately 200 feet

1.6.1 Power Line

Sierra Pacific proposes to upgrade the existing 12.5 kV single-circuit wood pole distribution line with a new 60 kV single-circuit wood pole line for approximately 3,500 feet. Overall, the upgraded line would require one-for-one pole replacement of approximately 19 poles. The route alignment, proposed pole locations, proposed new pole locations, and tentative locations of pull/tension sites and access roads are shown in Figure 1-3.

1.6.2 Poles

The power line for the Proposed Project would be supported by wood poles that would be approximately 15 inches in diameter at base and approximately 9 inches in diameter at tip, and would be approximately 57.5 feet in height, approximately 1 inch in diameter larger at the base and approximately 9 feet higher than the existing poles. Existing distribution underbuild would be transferred to the new poles.

Three 60 kV and three 12.5 kV conductors would be installed on each pole with a minimum conductor height of 25 feet above ground. Figure 1-4 illustrates the proposed pole designs. Span lengths between the poles would be approximately 200 feet. The poles would be directly embedded at a depth of approximately 7.5 feet depending on load and soil characteristics. No foundations would be required. The new poles would be placed adjacent to the existing poles (i.e. within approximately 3 feet of the existing poles).

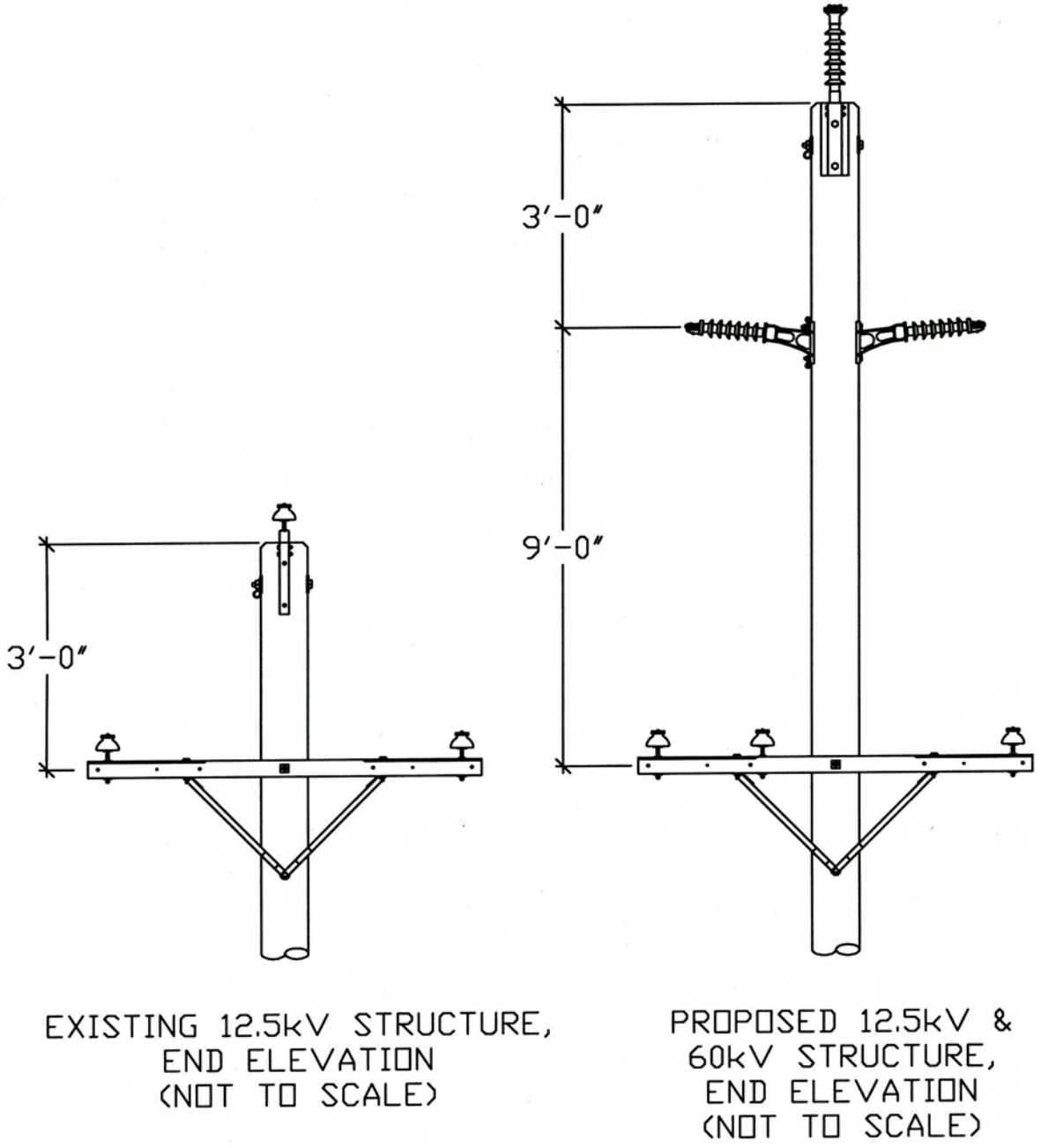

SOURCE: Sierra Pacific

Sierra Pacific Hirschdale Power Line Project . 206056

Figure 1-4

Existing and Proposed Pole Structures

1.7 Right-of-Way Requirements

Sierra Pacific currently owns right-of-way (ROW) easements of undetermined widths[1] along the existing 12.5 kV distribution line. The Proposed Project would require a 40 foot wide easement.

1.8 Construction

This section describes construction methods to be used for the Proposed Project.

1.8.1 Power Line Construction

Construction of the power line would include digging a hole, assembling the wood pole (i.e., adding arms, insulators, etc.), installing the pole, stringing the new nonspecular conductors for the 60 kV single-circuit, and replacing the existing 12.5 kV line and hardware on the new pole. In addition, construction of the 60 kV power line would require establishment of a staging area/helicopter yard, pull and tension sites; and access to pole sites and pull and tension sites along the power line route.

1.8.1.1 Staging Area/Helicopter Yard

A 14,000 square-foot area in an existing parking lot near the Proposed Project would be used as a staging area and helicopter yard. The site would be cleared of all vegetation using a hydroaxe.[2] It would temporarily stage construction vehicles and materials, tools, and equipment and would serve as a reporting location for workers. The helicopter that would be used to construct the power line would be fueled at the yard. Aviation fuel would be transported to the helicopter yard by fuel truck to directly refuel the helicopter. No aviation fuel would be stored on site at the staging area/helicopter yard.

1.8.1.2 Pull and Tension Sites

In order to install the conductor, a pull site is proposed on the top of the hill at the south end of the Proposed Project and a tension site is proposed at the north end of the Proposed Project. The pull site would require a temporary disturbance area of 225 square feet and the tensioning site would result in a temporary disturbance area of 1,125 feet. The sites would be cleared of all vegetation using a hydroaxe. Equipment required at the pull site would be a trailer mounted drum puller and a line truck. The area for the tension site would be larger because a line truck with conductor reels as well as a tensioner truck would need to sit one in front of the other.

1 Sierra Pacific's current ROW easements for the existing distribution line were secured in the 1920s and 1930s and do not specify width.

2 A hydroaxe is a type of vegetation cutting machine that is typically mounted on a rubber tired tractor or bulldozer.

1.8.1.3 Access Roads

Construction crews would use existing roads along the Proposed Project corridor to access six of the pole sites. The other 13 pole sites would be accessed by helicopter. One new 20-foot wide and approximately 500-foot long overland access road is proposed from Hirschdale Road to the existing Line 621 ROW. The new access road would be prepared by removing all vegetation within the 20-foot by 500-foot area using a hydroaxe. These areas are identified on Figure 1-3. Turn-around areas would be required at the ends of Proposed Project right-of-way, along the Line 608 and Line 631 access roads.

Table 1-2 below provides a summary of the different types of access roads, the type of preparation that would be required, and the estimated disturbed area.

TABLE 1-2
SUMMARY OF ACCESS ROAD REQUIREMENTS

Road Name	Type of Road	Preparation Type	Area
Hirschdale Road	Existing - Paved	None	None
Floriston Avenue	Existing - Paved	None	None
Access Road 1	Existing - Dirt	None	None
Access Road 2	Proposed - Dirt	Hydroaxe	10,000 square feet
Access Road 3	Existing - Dirt	None	None

1.8.1.4 Helicopter Access

Helicopter access would be used to install 13 of the 19 proposed poles (Poles 1-5 and 12-19) as well as the conductor for these locations; however, Sierra Pacific may opt to string conductor by foot in some of these areas in lieu of a helicopter. A heavy-duty helicopter, such as a Skycrane, would be used to install the poles and haul in equipment and materials; whereas a light-duty Hughes 500 or 530 would be used to string the conductor. A helicopter would be used in areas where access is difficult or where there are sensitive resources such as wetlands. Only one helicopter is expected to be used at a time, not to exceed four hours a day. Additionally, the helicopter would not ‘touch down’ or land within the ROW.

1.8.1.5 Vegetation Removal

Helicopter construction would eliminate the need for a new permanent road within the Proposed Project ROW; however Sierra Pacific would need to clear low vegetation using a hydroaxe within the easement near structures 1-5 and 12-19 to land a compressor to dig new holes. In wooded or forested areas, trees would be removed within the ROW to provide safe clearance for the wires (See Figure 1-3). Because there would be no new ROW road for the new 60 kV line, access to trees requiring removal would be achieved by overland travel (i.e. by foot) from the nearest road. Tree removal would be done by hand using chain saws. The removed trees would be lopped and scattered within the ROW. Specifically, the wood would be cut into 12-inch lengths and pieces

larger than 8 inches in diameter would be split to speed drying. Figure 1-3 identifies the trees that are proposed to be removed. After tree removal, as mentioned above, Sierra Pacific would need to hydroaxe a 20-foot wide, 500-foot long road for overland travel along the existing 621 line ROW from Hirschdale Road to the distribution line.

1.8.1.5 Pole Installation

Pole holes at structure sites 1-5 and 12-19 would be excavated by hand to depths of 7.5 feet. Pole holes at structures 6-11 would be excavated conventionally with backhoes or line trucks with augers to depths of 7.5 feet. Blasting could be necessary in areas where there is rocky terrain (i.e., near Poles 1-5 and Poles 12-19). Blasting would be conducted only where digging is impeded by bedrock. All blasting procedures would be carried out in compliance with applicable laws and permit conditions.

A helicopter would be used to install poles 1-5 and poles 12-19 (See Figure 1-3). The wood poles associated with poles 6-11 would be delivered to the pole sites by a semi-tractor truck. Insulators and stringing sheaves would be assembled on the poles at the staging area/helicopter yard and the entire assembly would then be transported by helicopter or truck to its location. A pickup truck would be used to transport the crew, hand tools, and other minor materials to and from the nearest road to each of the pole locations. Table 1-3 shows a summary of pole installation and associated disturbance area estimates.

TABLE 1-3
SUMMARY OF TYPICAL POLE INSTALLATION METRICS

	Proposed Project Single-circuit 60 kV wood poles (approximate metrics)
Pole Diameter	At base = approximately 15 inches, at tip = approximately 9 inches
Auger Hole Depth	7.5 feet
Average Area of Disturbance for installation of new pole	100 sq. feet
Permanent Footprint per Pole	1.2 sq. feet
Number of Poles	19
Total Permanent Footprint for New Poles	Approximately 22 sq. feet

Soil removed from the holes would be stockpiled on the work area and used to backfill the holes. All remaining soil not needed for backfilling (estimated to be approximately 10 cubic feet per pole) would be spread around the pole sites.

1.8.1.6 Conductor Installation

Helicopters would be used to accomplish the pole to pole conductor stringing, eliminating the requirement for travel along the proposed ROW. Wire setup sites would be required at both ends of the Proposed Project at approximately 100 to 150 feet past the end poles (see Figure 1-3). Any grading would be accomplished by hand or by small excavators. A lead line would be spooled out from a motorized drum at the south wire site and installed through travelers at each structure. The lead line would then be attached to 'pullers' and pulled back through the travelers by the stationary ground-based equipment at the north wire setup site. Finally, the conductors would be attached to the 'pullers' and pulled back through each pole clamp to the south wire pulling site. After the conductors reach the pulling site, they would be correctly sagged and tensioned, then permanently clipped into the clamps at each structure. Where the ground-based stinging equipment cannot be staged via existing roads, it would be flown into the wire setup site via helicopter. Conductor splicing would not be required. Note, in order to transfer the existing distribution line to the proposed line, a power outage would be necessary for one day. Residences and business that would be affected would be notified by Sierra Pacific within three days of the expected outage.

1.8.1.7 Pole Removal

After the distribution conductors are transferred from the existing poles to the new poles, the existing poles would be cut at ground level. Existing poles 1-5 and 12-19 would be removed from the ROW with a helicopter and existing poles 6-11 would be removed with a line truck. The old poles would be given to private land owners or hauled to Sierra Pacific's pole yard in Reno, Nevada.

1.8.1.8 ROW Cleanup

Cleanup crews would follow the wire crews and remove all surplus material, equipment, construction debris, etc. Tree trimmings would be lopped and scattered as mulch and erosion control. All man-made construction debris would be removed and disposed of as appropriate at permitted landfill sites.

1.8.2 Construction Workforce and Equipment

Project construction would require several work crews. Including both Sierra Pacific and contracted construction personnel, the total number of construction crew members for the Proposed Project is roughly estimated to be 17 crew members, including the following:

1 General Foreman	2 Foremen
6 Linemen	4 Laborers
1 Truck Driver	3 Equipment Operators (including helicopter pilots)

It is expected that construction crews would work concurrently; however, the actual deployment of crews depends upon the timing of project approval and other factors. Table 1-4 describes the general purpose(s) and amounts of the equipment expected to be used during project construction.

TABLE 1-4
AMOUNT AND GENERAL PURPOSE OF THE EQUIPMENT EXPECTED TO BE USED DURING PROJECT CONSTRUCTION

No. and Type of Equipment	Use
1 Helicopter	Erects pole structures and strings wire
1 Hydroaxe	Clear vegetation at work areas
1 Wire Trailer	Transports and reels out wire
1 Wire Puller	Pulls wire
1 Wire Tensioner	Keeps slack out of wire when pulling
6 Pick-Up Trucks	Transport personnel, tools and materials
2 Manhauls	Transport personnel, tools and materials
3 Compressors	Operate air tools
1 Framing Truck	Hauls Frame Material
1 Track Excavator	Digs holes and is used for reclamation
1 Line Truck & Auger	Hauls conductor, poles, equipment, materials, and people, excavates holes, and installs poles and conductor.
1 Boom/Bucket Truck	Erects pole structures
1 Semi-Tractor/Trailer	Hauls materials, equipment, tools, etc.
1 Generator	Temporary Power

1.8.4 Construction Schedule

Table 1-5 provides a summary of Sierra Pacific's proposed construction schedule for the Hirschdale Power Line Project. The construction period for the Proposed Project would be expected to last approximately three months. Workers would be at the Proposed Project site 12 hours a day, seven days a week.

TABLE 1-5
PROPOSED CONSTRUCTION SCHEDULE

Project Activity	Proposed Project
Permit To Construct decision adopted and effective	June 15, 2007
Acquisition of required permits	June 15, 2007
Right-of-way / property acquisition	June 15, 2007
Final engineering completed	June 15, 2007
Construction begins	July 1, 2007
Power line construction complete	October 1, 2007
Project operational	October 2, 2007
Clean up	October 9, 2007

1.9 Operation and Maintenance

1.9.1 General System Monitoring and Control

Sierra Pacific uses industry standard monitoring and protection equipment on its power system, which would include the Proposed Project. The power line would be protected with power circuit breakers and related line relay protection equipment. If conductor failure were to occur, then power would automatically be removed from the line.

1.9.2 Facility Inspection and Maintenance Procedures

The 60 kV power line would be inspected on a yearly basis by an area line patrolman from the air or on an all terrain vehicle on existing roads. One structure-climbing inspection would occur every ten years. Structure-climbing inspections would be conducted by Sierra Pacific personnel using four-wheel drive vehicles large enough to carry the necessary tools and climbing safety equipment. Access to structures would be achieved via existing access roads, by overland travel or by foot to each structure.

Trees that could interfere with the safe operation of the power line would be removed pursuant to the National Electric Safety Code as needed over the life of the Proposed Project.

1.10 Electric and Magnetic Fields Summary

1.10.1 Electric and Magnetic Fields

Recognizing that there is a great deal of public interest and concern regarding potential health effects from exposure to electric and magnetic fields (EMF) from transmission lines, this document provides information regarding EMF associated with electric utility facilities and the potential effects of the Proposed Project related to public health and safety. Potential health effects from exposure to electric fields from transmission lines (effect produced by the existence of an electric charge, such as an electron, ion, or proton, in the volume of space or medium that surrounds it) are typically not of concern since electric fields are effectively shielded by materials such as trees, walls, etc. Therefore, the majority of the following information related to EMF focuses primarily on exposure to magnetic fields (invisible fields created by moving charges) from transmission lines. However, this Initial Study does not consider magnetic fields in the context of CEQA and determination of environmental impact. This is because [1] there is no agreement among scientists that EMF does create a potential health risk, and [2] there are no defined or adopted CEQA standards for defining health risk from EMF. As a result, EMF information is presented for the benefit of the public and decision makers. Additional information on electric and magnetic fields generated by transmission lines is presented in Appendix A.

After several decades of study regarding potential public health risks from exposure to power line EMF, research results remains inconclusive. Several national and international panels have conducted reviews of data from multiple studies and state that there is not sufficient evidence to

conclude that EMF causes cancer. Most recently the International Agency for Research on Cancer (IARC) and the California Department of Health Services (DHS) both classified EMF as a *possible* carcinogen.

Presently, there are no applicable regulations related to EMF levels from power lines. However, the CPUC has implemented a decision (D. 06-01-42) requiring utilities to incorporate "low-cost" or "no-cost" measures for managing EMF from power lines up to approximately 4 percent of total project cost. Using the 4 percent benchmark, Sierra Pacific has incorporated low-cost and no-cost measures to reduce magnetic field levels along the power line corridor.

1.10.2 EMF and the Proposed Project

Modeling has been conducted for the Proposed Project delineating the magnetic field levels for the Proposed Project power line with the existing pole heights (40 feet) and with pole heights of 50 feet and 55 feet. As part of the Proposed Project, Sierra Pacific would incorporate "no cost" and "low cost" magnetic field reduction steps. The specific measures proposed by Sierra Pacific to reduce magnetic field exposure from the Proposed Project are:

- No cost measure: cross phase the 12.5 kV and the 60 kV lines.
- Low cost measure: raise the pole heights from 50 feet to 55 feet, which would reduce the ground level magnetic fields by 29 percent directly below the line and by 18 percent at the edge of the power line right-of-way.;

Figure 1-5 shows EMF levels for the Proposed Project power line with and without EMF reduction measures.

1.11 Required Permits and Approvals

The California Public Utilities Commission (CPUC) is the CEQA lead agency for the Hirschdale Power Line Project. Sierra Pacific would also obtain permits, approvals, and licenses as needed from, and would participate in reviews and consultations as needed with, federal, State, and local agencies. Table 1-6 lists the agencies that may have permit authority over the Proposed Project.

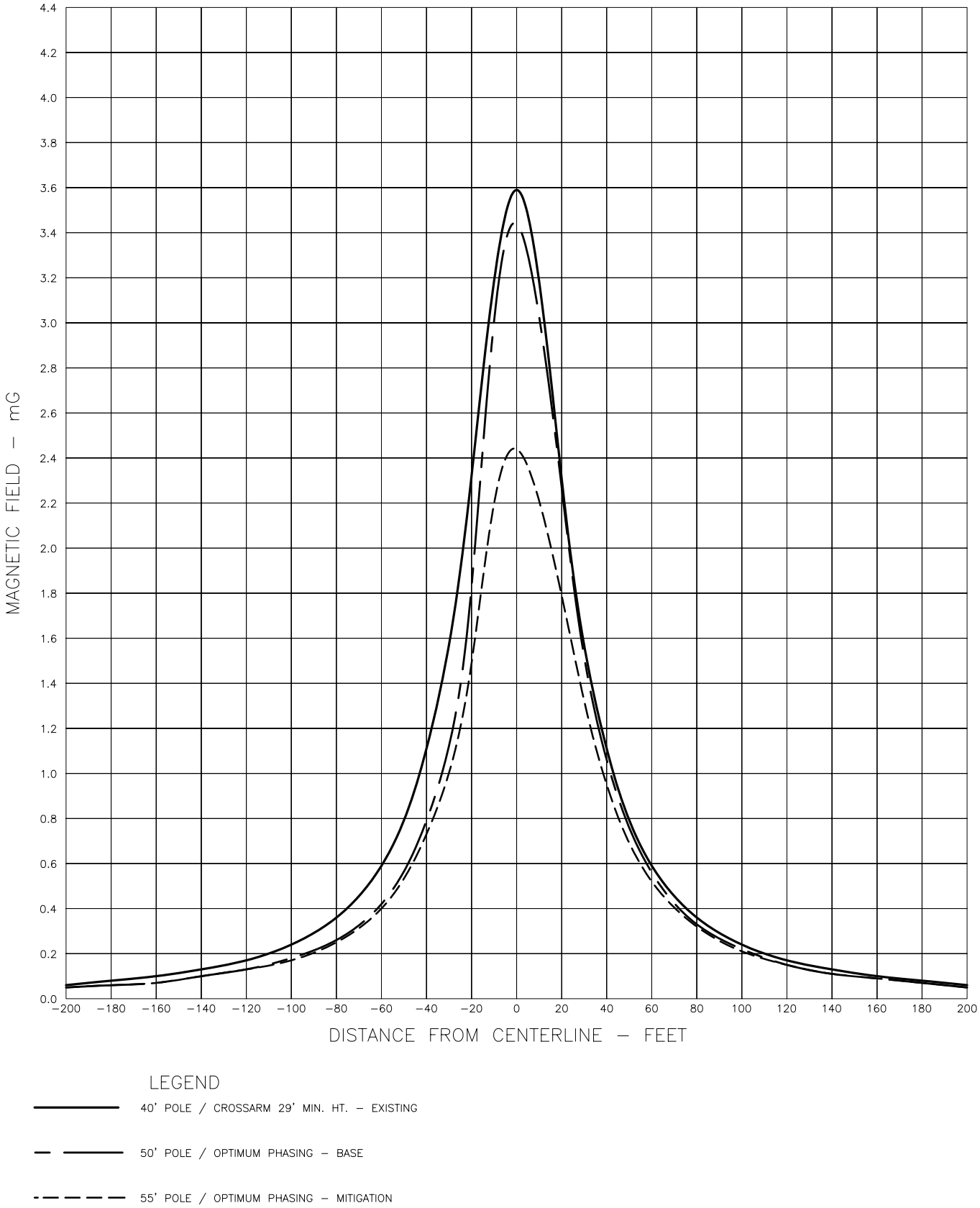

SOURCE: Sierra Pacific, 2006

Sierra Pacific Hirschdale Power Line Project . 206056

Figure 1-5
Estimated EMF Levels with and without EMF Reduction Measures

TABLE 1-6
SUMMARY OF PERMIT REQUIREMENTS

Agency	Permits	Jurisdiction/Purpose
Federal Agencies		
Federal Aviation Administration (FAA)	Lift Plan Permit	Helicopter Construction Plans
State Agencies		
California Public Utilities Commission	Permit to Construct	Project approval and CEQA review
State Historic Preservation Officer (SHPO)	National Historic Preservation Act compliance	Cultural and or historic resources
California Department of Transportation (Caltrans)	Oversized Load Permit	Hauling large or heavy loads on State roadways.
Local Agencies		
Nevada County Department of Transportation and Sanitation	Encroachment and Oversized Load permits	Crossing and hauling large or heavy loads on County roads
Nevada County Sheriff's Department	Blasting Permit	Construction involving blasting.

References – Project Description

Sierra Pacific. 2006. Proponent's Environmental Assessment for Sierra Pacific Company's 608/621 Tie Line Project Hirschdale, California. May 9, 2006.

Sierra Pacific 2006a. Data responses to California Public Utilities Commission Data Requests (Numbers 1 and 2) for Hirschdale Power Project (A.06-04-017).