APPENDIX A
EMF

Electric and Magnetic Fields

The California Public Utilities Commission (CPUC) and the California Department of Health Services (CDHS) have not concluded that exposure to magnetic fields from utility electric facilities is a health hazard. Many reports have concluded that the potential for health effects associated with electric and magnetic field (EMF) exposure is too speculative to allow the evaluation of impacts or the preparation of mitigation measures.

EMF is a term used to describe electric and magnetic fields that are created by electric voltage (electric field) and electric current (magnetic field). Power frequency EMF is a natural consequence of electrical circuits, and can be either directly measured using the appropriate measuring instruments or calculated using appropriate information.

Electric and magnetic fields (EMF) are present wherever electricity flows: around appliances and power lines, in offices, schools, and homes. Electric fields are invisible lines of force, created by voltage, and are shielded by most materials. Units of measure are volts per meter (V/m). Magnetic fields are invisible lines of force, created by electric current and are not shielded by most materials, such as lead, soil and concrete. Units of measure are Gauss (G) or milliGauss (mG, 1/1000 of a Gauss). Electric and magnetic field strengths diminish with distance. These fields are low energy, extremely low frequency fields, and should not be confused with high energy or ionizing radiation such as X-rays and gamma rays.

Possible Health Effects

The possible effects of EMF on human health have come under scientific scrutiny. Concern about EMF originally focused on electric fields; however, much of the recent research has focused on magnetic fields. Uncertainty exists as to what characteristics of magnetic field exposure need to be considered to assess human exposure effects. Among the characteristics considered are field intensity, transients, harmonics, and changes in intensity over time. These characteristics may vary from power lines to appliances to home wiring, and this may create different types of exposures. The exposure most often considered is intensity or magnitude of the field.

There is a consensus among the medical and scientific communities that there is insufficient evidence to conclude that EMF causes adverse health effects. Neither the medical nor scientific communities have been able to provide any foundation upon which regulatory bodies could establish a standard or level of exposure that is known to be either safe or harmful. Laboratory experiments have shown that magnetic fields can cause biologic changes in living cells, but scientists are not sure whether any risk to human health can be associated with them. Some studies have suggested an association between surrogate measures of magnetic fields and certain cancers while others have not.

California Public Utilities Commission Summary

Background - On January 15, 1991, the CPUC initiated an investigation to consider its role in mitigating the health effects, if any, of electric and magnetic fields from utility facilities and power lines. A working group of interested parties, called the California EMF Consensus Group, was created by the CPUC to advise it on this issue. It consisted of 17 stakeholders representing citizens groups, consumer groups, environmental groups, state agencies, unions, and utilities. The Consensus Group was charged to 1) consider a balanced set of facts and concerns; 2) define near-term research objectives; and 3) develop interim policies and procedures to guide the electric utilities in educating their customers, reducing EMF, and responding to potential health concerns. The Consensus Group's fact-finding process was open to the public, and its report incorporated concerns expressed by the public. Its recommendations were filed with the Commission in March of 1992. In August of 2004, the CPUC opened an Order Instituting Rulemaking to update the

Commission's policies and procedures related to electric and magnetic fields emanating from regulated utility facilities. This proceeding is scheduled to be completed by December of 2005.

Findings - Based on the work of the Consensus Group, written testimony, and evidentiary hearings, the CPUC issued its decision (93-11-013) on November 2, 1993, to address public concern about possible EMF health effects from electric utility facilities. The conclusions and findings included the following:

- The body of scientific evidence continues to evolve. However, it is recognized that public concern and scientific uncertainty remain regarding the potential health effects of EMF exposure.
- It is not appropriate to adopt any specific numerical standard in association with EMF until we have a firm scientific basis for adopting any particular value.

Interim Policies - The CPUC's decision specifically requires seven measures. One of these measures that is involved with the Project is as follows:

- No-cost and low-cost steps to reduce EMF. In response to a situation of scientific uncertainty and public concern, the CPUC felt it appropriate for utilities to take no-cost and low-cost measures where feasible to reduce exposure from new or upgraded utility facilities. It directs that no-cost mitigation measures be undertaken, and that low-cost options be implemented through the Project certification process. Four percent of total Project budgeted cost is the benchmark in developing EMF mitigation guidelines, and mitigation measures should achieve some noticeable reductions.

The CPUC will continue to monitor these issues. If new information develops in the future, the CPUC may amend its decision to reflect new scientific evidence.

Exemption Criteria - The CPUC agreed that "Utility management should have reasonable latitude to deviate and modify their guidelines as conditions warrant and as new EMF information is received. However, if the EMF guidelines are to be truly used as guidelines, the utilities should incorporate criteria which justify exempting specific types of projects from the guidelines."

PacifiCorp will use the following guidelines to determine those specific types of projects that will be exempt from no/low cost field reduction:

1. Operation, repair, maintenance replacement or minor alteration of existing structures, facilities or equipment.
2. Restoration or rehabilitation of deteriorated or damaged structures, facilities or equipment to meet current standards of public safety.
3. Addition of safety devices.
4. Replacement or reconstruction of existing structures and facilities on the same site and for the same purpose as the replaced structure or facility.
5. Emergency restoration projects.
6. Re-conductoring projects except when structures are reframed or reconfigured.
7. Projects located on land under the jurisdiction of the Forest Service, Bureau of Land Management or other governmental agency.
8. Privately owned tree farms.
9. Agricultural land within the Williamson Act.

10. Areas not suited to residential/commercial development. Such areas might include steep slopes, areas subject to flooding or areas without access to public facilities.

The intent of the exemption criteria is to exclude two types of projects. The first type of projects are those that either replace or make minor additions or modifications to existing facilities. This will include pole replacements or relocations less than 2,000 feet in length. Those projects where more than 2,000 feet of line is relocated or reconstructed or where the circuit is reinsulated or reconfigured should be considered for low cost magnetic field management techniques.

The second type projects are those located in undeveloped areas.

EMF Reduction - PacifiCorp will use the following Guidelines in the application of no and low cost steps to reduce magnetic field strengths:

1. PacifiCorp will take low cost steps to reduce fields from new and upgraded facilities in accordance with CPUC decision 93–11–013 on EMF.
2. No cost measures will be implemented when available and practical.
3. Mitigation measures should not compromise the reliability, operation, safety or maintenance of the system.
4. Total cost of mitigation measures should not exceed 4 percent of the total cost of the Project.
5. Mitigation measures should have a noticeable reduction in the magnetic field level approximately 15 percent or more.

In accordance with CPUC Decision 93-11-013, PacifiCorp will incorporate "no cost" and "low cost" magnetic field reduction steps in the proposed transmission and substation facilities. Proposed measures to reduce potential exposure to magnetic fields generated by the proposed facilities will be consistent with PacifiCorp's Electro Magnetic Fields, California Design Guidelines. The design guidelines include the following measures that may be available to reduce the magnetic field strength levels from electric power facilities:

- Current Reduction
- Distance from Conductors
- Conductor Spacing
- Phase Arrangement
- Current Balance
- Raising the transmission line structures.

APPENDIX B
LANDOWNER MEETING INFO

LANDOWNER MEETING
SIGN-IN SHEET

Project:	Yreka/Weed Transmission Project	**Meeting Date:**	Thursday, October 20, 2005 6:00 PM - 8:00 PM
Facilitators:	Jennifer Mulalley, Russ Loeffer, Dennis Desmarais & Sally LaBriere	**Place/Room:**	Weed City Hall – City Council Chambers 550 Main Street, Weed, CA

Landowner Name	Property Address	Signature
Bill Broadhead Rep. by Mike & Yoll Cox	5424 Hoy Rd	[illegible]
Jill Ray	5015 Hoy Rd	J Ray
Deborra Clayton	WEED PRESS	DEBORRA CLAYTON
Leonard Barbara Luey	4309 Hoy Rd	Barbara Luey
Carl E. Gotty	3021 Hwy 97	Carl E Gotty
Don & Judy Mackintosh	5322 Hoy Rd	
Nancy Coughlin	5005 Hoy Rd.	Nancy Coughlin
Chris Pappas	5026 Hoy Rd	[illegible]
Bill Hoy	3501 Hoy Rd	Bill Hoy

Letters & Opinions

Plea for Hoy Road

Dear Editor,

If you turn left on Hoy Road just over a mile north of Weed, you enter a scenic, historic small green valley that takes you back 50 to 60 years in time. The road winds through ranches that have been in the same families for generations.

It is a very pleasant, delightful experience. As you drive along you can almost feel the history of the valley. Cattle, horses, sheep and peacocks can be easily seen from the road.

Many people know and enjoy the drive through this valley. It is here that the former home of Abner Weed, the founder of our town, is located. It is a place that seems as though time will not change, but that is not true.

There is a transmission power line, which was built in 1924, that crosses the valley and goes to Weed. Pacific Power Company states that they must install another perpendicular power line that will cross the valley through three of these ranches.

This line will go to Weed Junction Substation to support the growth that is taking place in Lake Shastina. To plan for future growth, this is not the route to be established. There is a route that could go more directly to the growth area and Weed Junction Substation.

The planning of this beautiful area is very important at this time. The growth decisions that are made now are forever. This power line will degrade one of our area's scenic attractions permanently and also affect the surrounding area.

There is a meeting, if you would like to attend, this Thursday, October 20th from 6 to 8 p.m. in the city council chambers at Weed City Hall.

Don Mackintosh
Weed

No on Measure A

Dear Editor,

provides for an annual increase of up to two percent per year. They are asking us to pay for $31 million.

Considering the increased cost of real estate in our area, it would not be uncommon for you to see an increase on your taxes of $100 or more for Measure A.

California is over its head in debt, just because we the people can't seem to say no. I know that it is unpopular to go against school bonds, but I say enough is enough. No more debt, lets pay for what we can afford.

Vote No on Measure A.

Doris and Charlie Moss
Mount Shasta

Rare TV show

Dear Editor,

Last Tuesday I spent a couple of hours with a TV star and I can report a lot of heavy petting occurred.

The stars were Dez Young and his co-star Dash, a Llewellyn setter. They were filming one of their TV shows "Dash in the Uplands" at the Rising Sun a shooting preserve that I frequent.

I have meet several celebrates in my time but Dez Young shall stand out as one of the nicest and most unpretentious of them all. His show stresses family, respect for the game, gun safety, and respect for the outdoors.

His show can be seen on the Outdoor Life Network. It is one of the rare shows that the entire family can enjoy.

Charles Martin
Weed

Public radio?

Dear Editor,

You might have wondered, "what happened to NPR news?" It is hard to not connect the political changes to the increased corporate underwriting advertisements. Because of this people have been inputting requests to Jefferson Public Radio for alternatives.

The most common request is for Pacifica's Democracy Now! PBS TV station, KIXE channel 9.

The concept of public funded radio is great, but why should that public continue to support an intractable JPR executive management who offer "deaf ears" to their listeners' needs and requests.

Where is the "public" in that? Where is the accountability? Who voted for the JPR executive director to have the power to define for us where the political middle is or what is "fair and balanced?" How can this person possibly think they are immune from personal bias?

During this fall's JPR fundraiser, consider whether supporting this censorship with your hard earned funds is what you really want to do.

If you are tired of funding an unaccountable and unresponsive management send your JPR pledge envelope back empty with a note explaining why. See www.dnonjpr.org for details.

Consider redirecting your support to genuine independent media outlets that walk their talk and serve the public with free speech, investigative journalism based news programs, such as Pacifica Radio, Freed Speech TV (DISH channel 9415,) your cable access station MCTV-15, or KIXE channel 9 in Redding.

Sincerely,

Todd Cory
Mount Shasta

Fact or fiction?

Dear Editor,

A dark cloud of confusion hangs over McCloud. The town is divided over the Nestle project. The group against has spread its message through unfounded rumors, distortion and misrepresenting of facts. Are they fact or fiction?

Fiction: McCloud Community Services District would sell our water too cheap. Fact: Nestle would offer $300,000 to $400,000 annually.

Fiction: Nestle would

ly company, un-cari
employees or our to
They would offer an
health plan. They hav
made $15,000 in do
local and area groups.

Fiction: They wou
the air. Fact: The proc
ing sterile bottles w
spring water does not
pollution.

Fiction: Trucks w
through town. Fact
would be routed north,
of town.

Are these fact or
Whom do you belie
clear up this cloud of
get the facts straig
maybe McCloud will o
be the quiet, friendly
used to be.

Who is financially
this group? Lawyers, m
ing of expensive b
fliers, etc. all cost mo
is their agenda? One w

Nancy Murphy
McCloud

Eddy Creek Rd

Dear Editor,

Your letter to the
October 5th, "Dale Cre
needs some correcting.
the letter written b
Dibelka, and specific
portion concerning Ed
Road.

Since I live on Ed
Road and my previous
does not include Da
Road, my comments wi
ited to Eddy Creek Roa

To put it simply, Ed
Road is a private road
by those landowners
present road passes ove

While the US Fores
has legal access over t
that access could be bl
to the public should e
owners or the Forest
make that decision.
specifically why the ro
maintained by the
County Road Departme

In fact, putting up a g

APPENDIX C
AGENCY CONTACT LETTER & RESPONSES

POWER ENGINEERS, INC.
ENERGY, FACILITIES, COMMUNICATIONS

731 E. BALL ROAD
SUITE 100
ANAHEIM, CA 92805
PHONE 714-808-0123
FAX 714-808-0122

POWER ENGINEERS

Subject: PacifiCorp – Yreka / Weed Transmission Upgrade Project

Dear XX,

PacifiCorp proposes the Yreka/Weed Transmission Upgrade Project. The project is in Siskiyou County, in northern California, between the Cities of Yreka and Weed. The scope of this project is to provide an additional 115 kV transmission path between Yreka and Weed, eliminating congestion on a parallel transmission line.

There are three major components of this project:

1. Upgrade 17.6 miles of existing 69 kV transmission line to 115 kV by installing taller wooden poles, larger insulators, and heavier wire.
2. Modify the Yreka, Lucerne, and Weed Junction substations
3. Build approximately 1.6 miles of new 115 kV transmission line.

Property crossed by the transmission line is privately owned and consists primarily of rural pasture land, with some treed areas. There is an existing crossing of the Shasta River, and two existing railroad crossings. Please refer to the included map which shows the general location of the proposed project.

PacifiCorp is currently preparing a Proponent's Environmental Assessment (PEA) as part of its application to the California Public Utilities Commission (CPUC) for a *Permit to Construct*. In this effort, we would like to request the assistance of your agency in providing issues, concerns, and recommendations related to the proposed project. We further request that you provide us with the permits, approvals or authorization requirements by your agency, and relevant contact information. We may be contacting your office during our data collection process if you have relevant data and information that would be useful for the proposed project. Your prompt response to this letter is appreciated.

If you have any questions, concerns or comments, please call me at (208) 808-0123 or email to mstrand@powereng.com.

Sincerely,
POWER Engineers, Inc.

Mike Strand
Project Manager

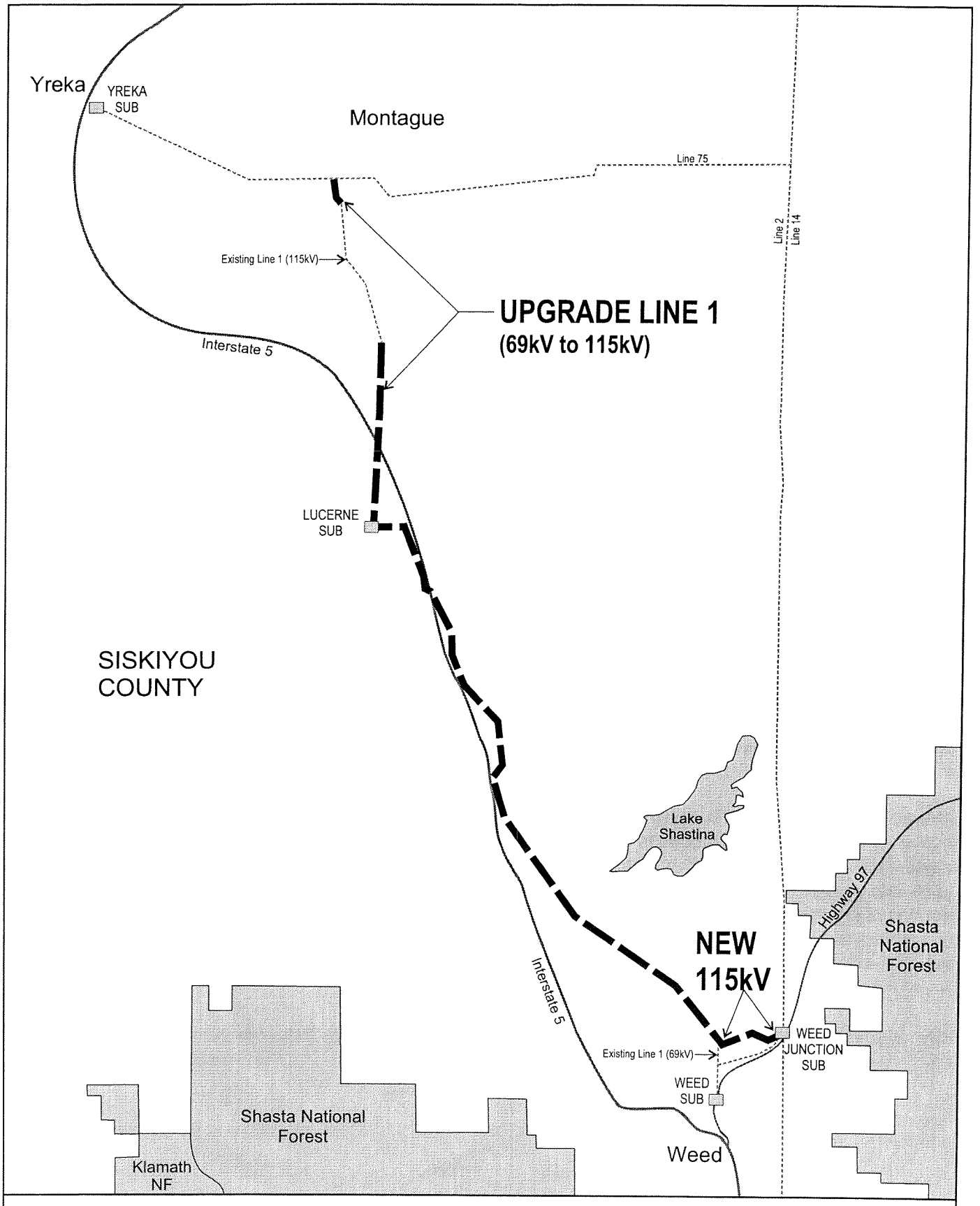

N
not to scale

YREKA / WEED TRANSMISSION UPGRADE PROJECT

September 9, 2005

Pacificorp

Line 1 Agency Contact List

Klamath National Forest Peg Boland, Forest Supervisor	1312 Fairlane Road Yreka, CA 96097-9549 (530) 842-6131
Shasta National Forest Shasta-McCloud Management Unit Mike Hupp, District Ranger	2019 Forest Road McCloud, CA 96057 (530)964-2184
Bureau of Land Management Redding Field Office Field Office Manager	355 Hemsted Drive Redding, CA 96002 (530) 224-2100
Bureau of Indian Affairs Pacific Region Ronald Jaeger, Regional Director	2800 Cottage Way Sacramento, CA 95825
U.S. Army Corp of Engineer Contact: Jane M. Hicks, Branch Chief	333 Market Street, 8th Floor San Francisco, CA 94105 (415) 977-8436
United States Fish & Wildlife Service Contact: Phil Detrich, Field Supervisor	1829 S. Oregon Street Yreka, CA 96097 (530) 842-5763 (530) 842-4517 - Fax
Federal Highway Administration California Division Gene Fong, Division Administrator	650 Capitol Mall, Suite 4-100 Sacramento, CA 95814 (916) 498-5014
Federal Aviation Administration Western-Pacific Region Larry Kephart, Division Manager	Room 6016, 15000 Aviation Boulevard Lawndale, CA 90261
California Department of Fish & Game North Coast Region Contact: Don Koch, Regional Manager	601 Locust Street Redding, CA 96001 (530) 225-2363 (530) 225-2360 – Peggy Mattingly, Secretary (530) 225-2381 - Fax
California State Parks Office of Historic Preservation Milford Wayne Donaldson, State Historic Preservation Officer	1416 9th Street, Room 1442-7 Sacramento, CA 95814
California Department of Transportation District 2 Stacey Barnes, Chief, Office of Encroachment Permits	P.O. Box 496073 Redding, CA 96049-6073

California Environmental Protection Agency Air Resources Board, Enforcement Division Jim Ryden, Division Chief	1001 I Street P.O. Box 2815 Sacramento, CA 95812-2815 (916) 551-1313
California Environmental Protection Agency State Water Resources Control Board Division of Water Quality Stan Martinson, Chief	1001 I Street P.O. Box 2815 Sacramento, CA 95812-2815 (916) 341-5250
California Energy Commission Systems Assessment and Facilities Siting Division Terry O'Brien	1516 Ninth Street, MS-29 Sacramento, CA 95814-5512
California Native American Heritage Commission Larry Myers, Executive Secretary	915 Capitol Mall, Room 364 Sacramento, CA 95814 (916) 653-4082 nahc@pacbell.net
North Coast Regional Water Quality Control Board Contact: Luis Rivera, Principal Engineer	5550 Skylane Blvd., Suite A Santa Rosa, CA 95403 (707) 576-2220 (707) 523-0135 - Fax
Siskiyou County Department of Agriculture Contact: Department Manager	Department of Agriculture 525 S. Foothill Drive Yreka, CA 96097-3036 (530) 841-4025 (530) 842-6690 - Fax
Siskiyou County Planning Department Wayne Virag, Director	312 Butte St. P.O. Box 1085 Yreka, CA 96097
City of Weed Earl Wilson, City Administrator	550 Main Street P.O. Box 470 Weed, California 96094 (530) 938-5020
City of Yreka Brian Meek, City Manager	701 Fourth Street Yreka, CA 96097 (530) 841-2386

COUNTY OF SISKIYOU

Planning Department
P.O. BOX 1085 • YREKA, CALIFORNIA 96097
(530) 842-8200 • FAX (530) 842-8211
WWW.CO.SISKIYOU.CA.US
E-MAIL: PLANNING@CO.SISKIYOU.CA.US

WAYNE VIRAG
DIRECTOR

PATRICIA A. BLUMAN
ASSISTANT DIRECTOR

September 20, 2005

Mike Strand, Project Manager
Power Engineers, Inc.
731 E. Ball Road
Anaheim, CA 92805-5951

Subject: PacifiCorp Yreka - Weed Transmission Upgrade Project

Dear Mr. Strand:

This letter is in response to your invitation to participate in the scoping component of a proposed EA for the Transmission Upgrade Project from Yreka to Weed. To provide added clarity about the proposal, Pacific Power &Light (PP&L) staff Russ Loeffler and Sally LaBriere met with me to share their insights. It is understood that the project will be limited to replacement and upgrade of the transmission line from Yreka to Weed, with a 1.6 mile segment added to connect to the Weed Junction substation.

As I shared with Russ and Sally, I can find no permits or other entitlements required from the Planning Department; however, as I shared with them, I would encourage you to apprize the County Board of Supervisors of your plans as well.

Thank you for allowing us to provide these comments. Should you require additional information or assistance, please feel free to contact me.

Sincerely,

Wayne Virag
Director

WV:vdc

G:\2Z\CORR\WV\2005\PacifiCorp.transmission2.project.wpd

POWER ENGINEERS

TELEPHONE RECORD

DATE:	09/20/05	TIME OF CALL:	
TO:	Becky Eusted, CalTrans	PHONE NUMBER:	(530) 225-3437
FROM:	Mike Strand	CC:	D. Desmarais
TYPED BY:	ms	PROJECT NUMBER:	108539
CLIENT:	Pacificorp		
PROJECT NAME:	Line 1		
SUBJECT:	Agency contact - CalTrans		

MESSAGE

Becky Eusted is with CalTrans in the Redding office. She called to discuss the Project after receiving the agency contact letter.

She indicated that she had talked with CalTrans Environmental Unit and they indicated to her that they would review the PEA and environmental surveys when they are completed. I told her when the PEA was scheduled to be filed with the CPUC and that the surveys would likely occur next spring/early summer. The results of those surveys would be available for CalTrans review as well.

Becky wanted to make sure that CalTrans ROW area would be included in the PEA document. She indicated that new encroachment permits would be needed for both crossings of Interstate 5, and that they would review the PEA and survey results in review of the encroachment applications.

When applying for the new encroachment permits, Pacificorp should contact Becky directly.

POWER ENGINEERS

TELEPHONE RECORD

DATE:	09/22/05	TIME OF CALL:	
TO:	Charlie Chin, FHA	PHONE NUMBER:	
FROM:	Mike Strand	CC:	D. Desmarais
TYPED BY:	ms	PROJECT NUMBER:	108539
CLIENT:	Pacificorp		
PROJECT NAME:	Line 1 Transmission Upgrade		
SUBJECT:	call from Federal Highways		

MESSAGE

Charlie Chin called in response to the agency contact letter that the Federal Highways Administration received. Charlie is located in the Sacramento office. He said that FHA has no comments, no questions, and no concerns with the project.

He indicated that CalTrans (Redding office) will be responsible for issuing the encroachment permits for the I-5 crossings. CalTrans will contact FHA if they feel it is necessary before issuing the permits. Charlie indicated that our phone conversation would be FHA's response to the contact letter and the project.

Michael Strand (Anaheim, CA)

From: Michael D Hupp [mhupp@fs.fed.us]
Sent: Tuesday, September 27, 2005 11:10 AM
To: Michael Strand (Anaheim, CA)
Subject: Forest Service Comments on Yreka-Week 115kV line upgrade.

Mike: In repsonse to your letter of September 9, 2005, the Forest Service has no concerns about the proposed Weed-Yreka 115kV power line upgrade as it does not cross or impinge on National Forest lands.

Mike Hupp
District Ranger
Shasta-McCloud Management Unit
Shasta-Trinity National Forest
530-926-9600

Michael Strand (Anaheim, CA)

From: David.Butterfield@faa.gov
Sent: Thursday, September 29, 2005 1:31 PM
To: Michael Strand (Anaheim, CA)
Subject: PacifiCorp-Yreka / Weed Upgrade

Mike,

I am the FAA's Aviation Safety Inspector assigned to review your request to upgrade the PacifiCorp transmission path between Yreka and Weed, California. I have two questions at this time:

(1). In your letter of September 9th to Larry Kephart, FAA Western-Pacific Region, you state that one of the components includes installing taller poles. Please advise me the height of the current poles and the proposed height of the new poles.

(2). What it the magnetic direction and distance at the closest point from the transmission path to the Montague-Yreka Rohrer and Weed airports?

I will be out of the office from this afternoon (Thursday) until Friday the 7th. I look forward to working with you to meet your request of the FAA.

Regards,

Dave Butterfield
Flight Standards
AWO/AWP-230.9
(310) 725-7230

POWER ENGINEERS

TELEPHONE RECORD

DATE:	10/14/05	TIME OF CALL:	
TO:	Dave Butterfield, FAA	PHONE NUMBER:	
FROM:	Mike Strand	CC:	D. Desmarais R. Loeffler B. Westerfield
TYPED BY:	ms	PROJECT NUMBER:	108539
CLIENT:	Pacificorp		
PROJECT NAME:	Line 1		
SUBJECT:	FAA contact record		

MESSAGE

Dave called today as a follow-up to his email dated 9/29/05. I explained to him where the project was in the CEQA process (filing PEA in November), and that Pacificorp would be coordinating directly with him in regards to the Notice of Proposed Construction and Alteration.

He said that they would not have any comment in regards to the PEA and that initially there appeared to be no issues in regards to flight standards. However, he would still like to have the questions in his email answered so they can make a better assessment.

He will be sending a letter out with their response today.

City of Yreka
701 Fourth Street • Yreka, CA 96097
(530) 841-2386 • FAX (530) 842-4836

September 30, 2005

Mike Strand, Project Manager
Power Engineers, Inc.
731 E. Ball Road, Suite 100
Anaheim, CA 92805-5951

Dear Mr. Strand:

Subject: PacifiCorp – Yreka/Weed Transmission Upgrade Project

Thank you for your letter pertaining to the PacifiCorp – Yreka/Weed Transmission Upgrade Project.

An Encroachment Permit is required for any work in a public right of way in the City of Yreka. An application for an Encroachment Permit is attached for your use.

Please call me at (530) 841-2319 if you have any questions.

Sincerely,

Steven D. Neill, P.E.
Director of Public Works

Enclosure

U.S. Department
of Transportation
**Federal Aviation
Administration**

Federal Aviation Administration
Western-Pacific Region

15000 Aviation Boulevard
Lawndale, CA 90261

October 17, 2005

Brian Strand
731 E. Ball Road
Suite 100
Anaheim, CA 92805-5951

Dear Mr. Strand:

The Flight Technical Procedures Branch of Flight Standards has reviewed the information provided in your letter of September 9, 2005. We have no concerns or issues relative to the Proponents Environmental Assessment (PEA) for the subject project.

Flight Standards will need to review the project for safety of flight concerns at the appropriate time in the project cycle. We look forward to hearing from you or PacifiCorp as the project moves forward.

Sincerely,

for Larry G. Kephart
Manager, Flight Standards Division, AWP-200

PACIFICORP

PROJECT MANAGEMENT
925 S. Grape St., Bldg. 5 • Medford, OR 97501 • PHONE (541) 776-5480 • FAX (541) 776-5429

Date: November 2, 2005

Brian McDermott
305 Butte Street
Yreka, CA 96097

RE: PacifiCorp Transmission Line Project

Dear Mr. McDermott:

Last month Sally LaBriere and I met with Wayne Virag to provide advance notice of a proposed transmission line project in Siskiyou County. The scope of work includes upgrading approximately 18 miles of existing transmission line from 69kV to 115kV, upgrades to three existing substations, and construction of approximately 1.5 miles of new 115kV transmission line. This project is necessary to improve the reliability of the local transmission grid in Siskiyou County area and to avoid transmission line overloads in the area.

From our meeting with Wayne and prior contacts with his staff, we confirmed that conditional use or building permits will not be required for this project. We will be obtaining CALTRANS permits for the I-5 crossings. We will also be filing for a Permit to Construct with the CPUC. Wayne didn't anticipate any county permits, but asked that I contact you directly and provide a summary of the project. I have enclosed a project description and map. We expect to start construction activities in September 2006.

I have enclosed a brief project overview from chapter 2 of our PEA (proponent's environmental assessment) that will be submitted to the CPUC next week. I have also enclosed a map which provides an overview of the project.

If you have any questions regarding this project, please contact me either by E-mail or phone.

Thanks,

Russ Loeffler

Russ Loeffler
Sr. Project Manager
PacifiCorp
(541)776-5480
Russ.Loeffler@PacifiCorp.com

cc: Wayne Virag
Sally LaBriere

Attachments: Project Map and Page 1 – Project Description, Chapter 2 Project PEA

State of California – The Resources Agency
ARNOLD SCHWARZENEGGER, Governor
DEPARTMENT OF FISH AND GAME
http://www.dfg.ca.gov
NORTHERN CALIFORNIA-NORTH COAST REGION
601 LOCUST STREET
REDDING, CA 96001
(530) 225-2300

November 4, 2005

Mr. Mike Strand
POWER Engineers, Inc.
731 E. Ball Road, Suite 100
Anaheim, CA 92805-5951

Dear Mr. Strand:

PacifiCorp Yreka/Weed Transmission Upgrade Project

The Department of Fish and Game (DFG) received your letter requesting our recommendations regarding the subject project. PacifiCorp proposes to (1) upgrade 17.6 miles of existing transmission line; (2) modify the Yreka, Lucerne, and Weed Junction substations; and (3) build approximately 1.6 miles of new transmission line. PacifiCorp is currently preparing a Proponent's Environmental Assessment. The DFG offers the following comments on the project in our role as both a trustee agency and a responsible agency under the California Environmental Quality Act (CEQA).

The California Natural Diversity Database (NDDB) indicates the presence of greater sandhill crane (*Grus canadensis tabida*), a State threatened and fully protected species, in several locations along the project route. To reduce potential impacts to sandhill crane nesting and rearing activities, surveys for active nests shall be performed prior to start of project activities when a known sandhill crane territory is located within 0.5 mile of the project site and the activity will occur during the typical nesting and rearing season (April 1 to August 15). If active nests are found, a no-disturbance buffer radius of up to 0.5 mile may be required around the nest. The actual size of the buffer may be modified based on an evaluation by a qualified biologist of the sensitivity of the birds to the level of project disturbance. The no-disturbance buffer may be lifted prior to August 15 if it is determined safe to do so by a qualified biologist. Any reduction in the 0.5 mile buffer radius or lifting of the no-disturbance buffer must be approved in writing by the DFG.

The NDDB also indicates the presence of Swainson's hawk (*Buteo swainsoni*), a State listed threatened species, in the project vicinity. If one or more active Swainson's hawk nests are present within the 0.5 mile survey area, the active nest(s) shall be monitored by a qualified raptor biologist prior to and during project activities. If the nesting pair's behavior suggests agitation or disturbance by project activities, all activities in the area shall immediately stop

pending consultation with the DFG. Following a review of the breeding pair's behavior, DFG will determine whether project activities in the area may continue during the nesting season and, if so, the conditions under which they may continue.

Coho salmon (*Oncorhynchus kisutch*), federally listed as threatened since 1997, were officially listed as State threatened on March 30, 2005. In the Shasta River, spawning coho salmon use gravel areas similar to those used by steelhead. These areas include the lower seven miles of the main stem Shasta, the upper river below Parks Creek and Big Springs, as well as Parks Creek itself, when flows are adequate. The transmission line crosses the Shasta River south of the town of Montague where 1.6 miles of new transmission line is being built and again as the Shasta River flows into Lake Shastina. The portion of transmission line being upgraded also crosses Parks Creek just north of the above-mentioned Shasta River crossing. To protect coho salmon as well as water quality and riparian habitat, the DFG recommends PacifiCorp minimize soil disturbance and utilize effective erosion control measures to prevent sediment from entering waterways. Also the project proponent shall avoid disturbance or removal of all riparian vegetation. If project activities result in modifications to streambeds, banks, or riparian vegetation the project proponent should notify the DFG under Division 2, Chapter 6, §1602 of the Fish and Game Code prior to undertaking any of these activities. When notified, the DFG will determine whether or not a streambed alteration agreement is required.

The NDDB also indicates the presence of sensitive plant species in the vicinity of the project site. These species are listed on the attached table (Table 1) which summarizes the typical habitat(s), geographic distribution, number of known occurrences in the NDDB, the NDDB State rank, the California Native Plant Society (CNPS) list status, and the CNPS rarity-endangerment-distribution code for these species. Based on existing information, DFG has concluded these sensitive plant species meet the definitions of Section 15380(b) of the CEQA Guidelines and, therefore, shall be considered as rare or endangered species per Section 15380(d) of the CEQA Guidelines. Field surveys shall be conducted in accordance with the DFG's "Guidelines for Assessing the Effects of Proposed Projects on Rare, Threatened, and Endangered Plants and Natural Communities (revised May 8, 2000) (attached)." If any sensitive plant species are present and will be affected by the project, DFG will be notified and species-specific mitigation developed.

From the provided project description and our knowledge of the site, the project has the potential to adversely affect wildlife resources as defined in Section 711.2 of the Fish and Game Code through impacts to vegetation and the

soil required to sustain habitat for fish and wildlife. Unless rebutted by substantial evidence in the record, this project should not be considered de minimis with regard to its impact on fish and wildlife resources.

Thank you for the opportunity to provide a preconsultation on this project. If you have any questions or comments, please contact Environmental Scientist Eda Eggeman at the letterhead address or by telephone at (530) 225-2753.

Sincerely,

DONALD B. KOCH
Regional Manager

Attachments

cc: Dr. Terrence Enk
POWER Engineers
1295 S. Eagle Flight Way
Boise, Idaho 83709

Ms. Eda Eggeman
Department of Fish and Game
601 Locust Street
Redding, California 96001

ec: Mr. Craig Martz
Ms. Eda Eggeman
Department of Fish and Game
601 Locust Street
Redding, California 96001

Mr. Robert Schaefer
Department of Fish and Game
1724 Ball Mountain Road
Montague, California 96064

Table 1 – Di sition and Status of Rare, Threatened, and Endangered Pla. Occurring Near the PacifiCorp Yreka / Weed Transmission U. grade Project Site

Species	Habitat	California Distribution	Approximate Elevational Range	NDDB Occurrence	State Rank	CNPS List	CNPS R-E-D Code
Woolly balsamroot (*Balsamorhiza lanata*)	Cismontane woodland	Siskiyou County	1,900 to 6,000 Feet	38	S2.2	1B	2-2-3
Shasta chaenactis (*Chaenactis suffrutescens*)	Lower montane coniferous forest, Upper montane coniferous forest / sandy, serpentinite	Siskiyou and Trinity counties	2,231 to 7,400 Feet	24	S3.2?	1B	2-1-3
Pallid bird's beak (*Cordylanthus tenuis* spp. *pallescens*)	Lower montane coniferous forest (gravelly, volcanic alluvium)	Shasta and Siskiyou Counties	2,280 to 5,280 Feet	36	S1.1	1B	3-2-3
Coast fawn lily (*Erythronium revolutum*)	Bogs and fens, Broadleafed upland forest, North Coast coniferous forest / mesic, streambanks	Del Norte, Humboldt, Mendocino, and Siskiyou counties	50 to 4,350 Feet	19	S2.2	2	2-2-1
Alkali hymenoxis (*Hymenoxys lemmonii*)	Great Basin scrub, Lower montane coniferous forest, Meadows and seeps	Modoc and Siskiyou Counties	2,640 to 5,000 Feet	8	S2.2	2	2-2-1
Pickering's ivesia (*Ivesia pickeringii*)	Lower montane coniferous forest Meadows	Siskiyou and Trinity Counties	2,800 to 4,580 Feet	12	S2.2	1B	3-2-3
Shasta orthocarpus (*Orthocarpus pachystachyus*)	Great Basin scrub, Meadows [?], Valley and foothill grassland	Siskiyou County	2,753 to 5,000 Feet	4	S1.1	1B	3-3-3

NOTES:

CNPS List

1A Plants presumed extinct in California
1B Plants rare, threatened, or endangered in California and elsewhere
2 Plants rare, threatened, or endangered in California but more common elsewhere
4 Limited distribution or infrequent throughout a broader area in California. Not rare but uncommon enough that status should be monitored regularly

State Rank

S1 Less than 6 element occurrences or less than 1,000 individuals or less than 2,000 acres
S2 6-20 element occurrences or 1,000-3,000 individuals or 2,000-10,000 acres
S3 21-100 element occurrences or 3,000-10,000 individuals or 10,000-50,000 acres

Threat designation (attached to State rank as a second number)

1 Very threatened
2 Threatened
3 No current threats known

CNCNPS R-E-D code

R (Rarity)

1 Rare but found in sufficient numbers and distributed widely enough that the potential for extinction is low at this time
2 Distributed in a limited number of occurrences, occasionally more if each occurrence is small
3 Distributed in one to several highly restricted occurrences or present in such small numbers that it is seldom reported

E (Endangerment)

1 Not endangered
2 Endangered in a portion of its range
3 Endangered throughout its range

D (Distribution)

1 More or less widespread outside California
2 Rare outside California
3 Endemic to California

Guidelines for Assessing the Effects of Proposed Projects on Rare, Threatened, and Endangered Plants and Natural Communities

State of California
THE RESOURCES AGENCY
Department of Fish and Game
December 9, 1983
Revised May 8, 2000

The following recommendations are intended to help those who prepare and review environmental documents determine **when** a botanical survey is needed, **who** should be considered qualified to conduct such surveys, **how** field surveys should be conducted, and **what** information should be contained in the survey report. The Department may recommend that lead agencies not accept the results of surveys that are not conducted according to these guidelines.

1. Botanical surveys are conducted in order to determine the environmental effects of proposed projects on all rare, threatened, and endangered plants and plant communities. Rare, threatened, and endangered plants are not necessarily limited to those species which have been "listed" by state and federal agencies but should include any species that, based on all available data, can be shown to be rare, threatened, and/or endangered under the following definitions:

A species, subspecies, or variety of plant is "endangered" when the prospects of its survival and reproduction are in immediate jeopardy from one or more causes, including loss of habitat, change in habitat, over-exploitation, predation, competition, or disease. A plant is "threatened" when it is likely to become endangered in the foreseeable future in the absence of protection measures. A plant is "rare" when, although not presently threatened with extinction, the species, subspecies, or variety is found in such small numbers throughout its range that it may be endangered if its environment worsens.

Rare natural communities are those communities that are of highly limited distribution. These communities may or may not contain rare, threatened, or endangered species. The most current version of the California Natural Diversity Database's List of California Terrestrial Natural Communities may be used as a guide to the names and status of communities.

2. It is appropriate to conduct a botanical field survey to determine if, or to the extent that, rare, threatened, or endangered plants will be affected by a proposed project when:

a. Natural vegetation occurs on the site, it is unknown if rare, threatened, or endangered plants or habitats occur on the site, and the project has the potential for direct or indirect effects on vegetation; or
b. Rare plants have historically been identified on the project site, but adequate information for impact assessment is lacking.

3. Botanical consultants should possess the following qualifications:

a. Experience conducting floristic field surveys;
b. Knowledge of plant taxonomy and plant community ecology;
c. Familiarity with the plants of the area, including rare, threatened, and endangered species;
d. Familiarity with the appropriate state and federal statutes related to plants and plant collecting; and,
e. Experience with analyzing impacts of development on native plant species and communities.

4. Field surveys should be conducted in a manner that will locate any rare, threatened, or endangered species that may be present. Specifically, rare, threatened, or endangered plant surveys should be:

a. Conducted in the field at the proper time of year when rare, threatened, or endangered species are both evident and identifiable. Usually, this is when the plants are flowering.

When rare, threatened, or endangered plants are known to occur in the type(s) of habitat present in the project

area, nearby accessible occurrences of the plants (reference sites) should be observed to determine that the species are identifiable at the time of the survey.

b. Floristic in nature. A floristic survey requires that every plant observed be identified to the extent necessary to determine its rarity and listing status. In addition, a sufficient number of visits spaced throughout the growing season are necessary to accurately determine what plants exist on the site. In order to properly characterize the site and document the completeness of the survey, a complete list of plants observed on the site should be included in every botanical survey report.

c. Conducted in a manner that is consistent with conservation ethics. Collections (voucher specimens) of rare, threatened, or endangered species, or suspected rare, threatened, or endangered species should be made only when such actions would not jeopardize the continued existence of the population and in accordance with applicable state and federal permit requirements. A collecting permit from the Habitat Conservation Planning Branch of DFG is required for collection of state-listed plant species. Voucher specimens should be deposited at recognized public herbaria for future reference. Photography should be used to document plant identification and habitat whenever possible, but especially when the population cannot withstand collection of voucher specimens.

d. Conducted using systematic field techniques in all habitats of the site to ensure a thorough coverage of potential impact areas.

e. Well documented. When a rare, threatened, or endangered plant (or rare plant community) is located, a California Native Species (or Community) Field Survey Form or equivalent written form, accompanied by a copy of the appropriate portion of a 7.5 minute topographic map with the occurrence mapped, should be completed and submitted to the Natural Diversity Database. Locations may be best documented using global positioning systems (GPS) and presented in map and digital forms as these tools become more accessible.

5. Reports of botanical field surveys should be included in or with environmental assessments, negative declarations and mitigated negative declarations, Timber Harvesting Plans (THPs), EIR's, and EIS's, and should contain the following information:

a. Project description, including a detailed map of the project location and study area.
b. A written description of biological setting referencing the community nomenclature used and a vegetation map.
c. Detailed description of survey methodology.
d. Dates of field surveys and total person-hours spent on field surveys.
e. Results of field survey including detailed maps and specific location data for each plant population found. Investigators are encouraged to provide GPS data and maps documenting population boundaries.
f. An assessment of potential impacts. This should include a map showing the distribution of plants in relation to proposed activities.
g. Discussion of the significance of rare, threatened, or endangered plant populations in the project area considering nearby populations and total species distribution.
h. Recommended measures to avoid impacts.
i. A list of all plants observed on the project area. Plants should be identified to the taxonomic level necessary to determine whether or not they are rare, threatened or endangered.
j. Description of reference site(s) visited and phenological development of rare, threatened, or endangered plant(s).
k. Copies of all California Native Species Field Survey Forms or Natural Community Field Survey Forms.
l. Name of field investigator(s).
m. References cited, persons contacted, herbaria visited, and the location of voucher specimens.

Michael Strand (Anaheim, CA)

›m: Paul Keiran [PKeiran@waterboards.ca.gov]
..nt: Tuesday, November 29, 2005 9:51 AM
To: Michael Strand (Anaheim, CA)
Subject: Pacificorp-Yreka/Weed Transmission Line

Hello Mike, I may have contacted you already, but, if not, the Regional Water Board permit needed for this project is a linear erosion control permit. It's for long trench projects such as this. It can be obtained online at SWRCB/water quality/watershed protection/stormwater/linear construction permit...It's easy to navigate...Paul Keiran 576-2753

APPENDIX D
AFFECTED PROPERTY OWNERS

LINE 1 - PROPERTY OWNERS WITHIN 300' OF UPGRADE & NEW TRANSMISSION LINE PROJECT			
OWNER	MAILING ADDRESS	CITY, STATE & ZIP	APN
Roy E And Doreen Billingsley	Box 122	Grenada, CA 96038-0122	038-250-090-000
Larry W And Barbara J Braze	Box 146	Grenada, CA 96038	038-250-240-000
Suzanne M Breceda Trust	2415 Breceda Lane	Montague, CA 96064	013-430-500-000
M[illegible] A Bridwell	Box 823	Montague, CA 96064-0823	038-150-070-000
California State Highway Division 2	P.O. Box 496073	Redding, CA 96049-6073	020-060-140-000
California State Highway Division 2	P.O. Box 496073	Redding, CA 96049-6073	020-080-370-000
California State Highway Division 2	P.O. Box 496073	Redding, CA 96049-6073	022-190-160-000
California State Highway Division 2	P.O. Box 496073	Redding, CA 96049-6073	022-230-520-000
California State Highway Division 2	P.O. Box 496073	Redding, CA 96049-6073	038-270-050-000
Charles B CAsh	804 Pumphouse Road	Grenada, CA 96038	022-400-080-000
Roy L And Dolores J CAsh	8331 Siskiyou Avenue	Grenada, CA 96038	038-280-070-000
Richard O And Sandra K Clyburn	Box 158	Grenada, CA 96038	038-420-320-000
Mary A Conner	Box 93	Grenada, CA 96038	038-420-300-000
John R And Jean C Copeland	7028 Siskiyou Boulevard	Grenada, CA 96038	038-260-110-000
David E And Mary Lea Lemos	1715 Montague-Grenada Road	Montague, CA 96064	013-420-220-000
Donald L And Sheila L Meamber	5800 Reservoir Road	Montague, CA 96064-9578	013-420-200-000
William B And Darlene L Duncan	22909 Slough Road	Edgewood, CA 96094-9584	020-090-490-000
Emmerson Investment Inc	Box 496028	Redding, CA 96049-6028	020-060-080-000
Emmerson Investment Inc	Box 496028	Redding, CA 96049-6028	020-080-090-000
Emmerson Investment Inc	Box 496028	Redding, CA 96049-6028	020-080-180-000
Emmerson Investment Inc	Box 496028	Redding, CA 96049-6028	020-080-220-000
Emmerson Investment Inc	Box 496028	Redding, CA 96049-6028	020-080-270-000
Leslie G And Wynes V Fiock	Box 144	Gazelle, CA 96034-0144	013-430-220-000
Leslie G And Wynes V Fiock	Box 144	Gazelle, CA 96034-0144	013-430-260-000
Rollie L And Sheila R Gilliam	507 Ne D	Alturas, CA 96101	038-420-210-000
Rollie L And Sheila R Gilliam	507 Ne D	Alturas, CA 96101	038-448-080-000
John R And Dorothy L Giorgi	Box 116	Gazelle, CA 96034-0116	022-190-170-000
John R And Dorothy L Giorgi	Box 116	Gazelle, CA 96034-0116	022-410-150-000
Edward E And Kathylene B Goltz	19030 Rainbow Way	Weed, CA 96094	020-120-060-000
E[illegible]d E And Kathylene B Goltz	19030 Rainbow Way	Weed, CA 96094	020-380-030-000
Cla[illegible]nce W And Annette L Goodwin	P O Box 86	Grenada, CA 96038	038-420-290-000
Claudine V Gray Trust	978 W Alluvial Avenue #101	Fresno, CA 93711	022-190-100-000
Claudine V Gray Trust	978 W Alluvial Avenue #101	Fresno, CA 93711	022-230-230-000
Claudine V Gray Trust	978 W Alluvial Avenue #101	Fresno, CA 93711	022-230-260-000
Claudine V Gray Trust	978 W Alluvial Avenue #101	Fresno, CA 93711	022-230-290-000
Claudine V Gray Trust	978 W Alluvial Avenue #101	Fresno, CA 93711	022-230-400-000
Claudine V Gray Trust	978 W Alluvial Avenue #101	Fresno, CA 93711	022-230-420-000
J R And Patricia E Gregory	350 Lombaroadi Avenue	Weed, CA 96094	020-130-090-000
Terry W And Janet L Holland	Box 262	Grenada, CA 96038-0262	038-420-340-000
Kent Horning	6817 Siskiyou Boulevard	Grenada, CA 96038	038-250-230-000
Bill And Betty Belle Hoy	3501 Hoy Road	Weed, CA 96094	020-110-100-000
Bill And Betty Belle Hoy	3501 Hoy Road	Weed, CA 96094	020-120-010-000
Bill And Betty Belle Hoy	3501 Hoy Road	Weed, CA 96094	020-130-030-000
Debra Hoy	2640 Hoy Road	Weed, CA 96094	020-110-160-000
S C And Virginia Jackson	1925 Hoy Road	Weed, CA 96094	020-100-180-000
S C And Virginia Jackson	1925 Hoy Road	Weed, CA 96094	020-110-180-000
Elvy Dwayne And Sandra Jean Jones	Box 878	Yreka, CA 96097-0878	038-400-040-000
Raymond F And Roselee M Kerr	Box 431	Grenada, CA 96038-0431	038-420-250-000
Helen S Kimes	2112 La Colina Drive	Santa Ana, CA 92705	038-280-050-000
Shapleigh H Kimes	2112 La Colina Drive	Santa Ana, CA 92705	038-280-060-000
Kuck & Sons Inc	6124 Willow Creek Road	Montague, CA 96064-9226	013-370-430-000
Susan E Kuck	6124 Willow Creek Road	Montague, CA 96064-9226	013-430-060-000
Ronald E And Frances Dee Langlo	Box 942895	Sacramento, CA 94295-0001	038-420-240-000
Danelle L Littell	P O Box 1355	Yreka, CA 96097	038-420-270-000
Leonard J And Barbara J Luiz	4309 Hoy Road	Weed, CA 96094	020-120-040-000
Donald M And Judith E Mackintosh	5322 Hoy Road	Weed, CA 96094	020-120-050-000
D[illegible] M And Judith E Mackintosh	5322 Hoy Road	Weed, CA 96094	020-130-080-000
Donald M And Judith E Mackintosh	5322 Hoy Road	Weed, CA 96094	020-380-010-000

LINE 1 - PROPERTY OWNERS WITHIN 300' OF UPGRADE & NEW TRANSMISSION LINE PROJECT			
OWNER	MAILING ADDRESS	CITY, STATE & ZIP	APN
Mario A And Vera J Rizzardo	2712 Montague Grenada Road	Montague, CA 96064	013-370-390-000
Mills Ranch	4916 1/2 Mills Road	Weed, CA 96094	020-060-010-000
Mills Ranch	4916 1/2 Mills Road	Weed, CA 96094	020-060-030-000
Ranch	4916 1/2 Mills Road	Weed, CA 96094	020-060-120-000
Mills Ranch	4916 1/2 Mills Road	Weed, CA 96094	020-060-150-000
Mills Ranch	4916 1/2 Mills Road	Weed, CA 96094	020-080-280-000
Mills Ranch	4916 1/2 Mills Road	Weed, CA 96094	020-090-560-000
Mills Ranch	4916 1/2 Mills Road	Weed, CA 96094	020-090-580-000
Mills Ranch	4916 1/2 Mills Road	Weed, CA 96094	020-090-590-000
Mills Ranch	4916 1/2 Mills Road	Weed, CA 96094	020-100-070-000
Mills Ranch	4916 1/2 Mills Road	Weed, CA 96094	022-230-110-000
Mills Ranch	4916 1/2 Mills Road	Weed, CA 96094	022-230-350-000
Mills Ranch	4916 1/2 Mills Road	Weed, CA 96094	022-230-410-000
Mills Ranch	4916 1/2 Mills Road	Weed, CA 96094	022-230-430-000
Mills Ranch	4916 1/2 Mills Road	Weed, CA 96094	022-240-190-000
Robert B And Jean A Mills	4916 Mills Road	Weed, CA 96094	020-090-480-000
Albert Monroe	Rt 1 Box 1048	Grenada, CA 96038	022-400-020-000
Peter B And Jeanette Nesbitt	5605 Sunshine Lane	Montague, CA 96064-9302	013-430-550-000
Robert J Nielsen Trust	11637 Alegre Drive	Dublin, CA 94568	022-190-080-000
Richard L And Henrietta E Peters	Box 422	Grenada, CA 96038-0422	022-190-110-000
Richard L And Henrietta E Peters	Box 422	Grenada, CA 96038-0422	038-250-260-000
Richard L And Henrietta E Peters	Box 422	Grenada, CA 96038-0422	038-280-090-000
Richard L And Henrietta E Peters	Box 422	Grenada, CA 96038-0422	038-280-110-000
Harold Albert And Judith Nancy Pflueger	Box 187	Trinity Center, CA 96091	020-110-190-000
Margaret Elaine Phillips	P O Box 111	Grenada, CA 96038	038-420-310-000
Jay M And Judy E Puckett	98 Brookfield Drive	Moraga, CA 94556	038-280-080-000
Marino Louis And Mary Nola Rizzardo	5112 Freeman Road	Montague, CA 96064-9675	013-430-290-000
Marino Louis And Mary Nola Rizzardo	5112 Freeman Road	Montague, CA 96064-9675	038-040-200-000
Mario A And Vera J Rizzardo	2712 Montague Grenada Road	Montague, CA 96064	013-430-410-000
M A And Vera J Rizzardo	2712 Montague Grenada Road	Montague, CA 96064	038-040-230-000
Siskiyou County	P.O. Box 496073	Redding, CA 96049-6073	020-110-200-000
Siskiyou County Road Department	P.O. Box 496073	Redding, CA 96049-6073	013-420-330-000
Siskiyou County Road Department	P.O. Box 496073	Redding, CA 96049-6073	013-430-280-000
Siskiyou County Road Department	P.O. Box 496073	Redding, CA 96049-6073	013-430-580-000
Siskiyou County Road Department	P.O. Box 496073	Redding, CA 96049-6073	020-080-380-000
Siskiyou County Road Department	P.O. Box 496073	Redding, CA 96049-6073	022-230-530-000
Siskiyou County Road Department	P.O. Box 496073	Redding, CA 96049-6073	022-230-540-000
Siskiyou County Road Department	P.O. Box 496073	Redding, CA 96049-6073	022-400-130-000
Siskiyou County Road Department	P.O. Box 496073	Redding, CA 96049-6073	022-410-160-000
Siskiyou County Road Department	P.O. Box 496073	Redding, CA 96049-6073	038-040-220-000
Warren Charles Steele	7033 Siskiyou Boulevard	Grenada, CA 96038	038-260-100-000
Frank R And Christy L Stonier	P O Box 58	Grenada, CA 96038	022-400-060-000
Frank R And Christy L Stonier	P O Box 58	Grenada, CA 96038	022-400-110-000
Frank R And Christy L Stonier	P O Box 58	Grenada, CA 96038	022-400-120-000
Frank R And Christy L Stonier	P O Box 58	Grenada, CA 96038	038-280-120-000
Alma Twitchell Junior	P O Box 51144	Idaho Falls, ID 83405-1144	038-448-040-000
Thomas J And Jill L Marston Vanaken	3719 Wingate Drive	Carmichael, CA 95608	013-430-510-000
Janice M VanCAmp	13502 Wilder Court	Clifton, VA 22024	013-430-570-000
Gordon P And Emily A Vincent	P O Box 1101	Yreka, CA 96097-1101	038-270-160-000

APPENDIX E
LIST OF PREPARERS

List of Preparers

PacifiCorp

Dennis Desmarais	Project Manager
Russ Loeffler	Construction & Engineering Project Manager

Stoel Rives LLP

William Westerfield	Attorney

POWER Engineers, Inc.

Mike Strand	Project Manager
Terry Enk	Biological Resources
Cynthia Lysne	Biological Resources, Water Resources
Mark Schaffer	Land Use & Agriculture
	Hazardous Materials
	Transportation
	Energy & Utilities
Darrin Gilbert	Visual Resources
Bob Kannor	Air Quality
Kurt Bell	Health, Safety, and Noise / EMF
Tim Hazekamp	GIS Mapping

GeoEngineers

Craig Erdman	Geology & Geohazards

SWCA

Cindy Arrington	Cultural Resources

APPENDIX F
ENVIRONMENTAL FIRST SEARCH REPORT

FirstSearch Technology Corporation

Environmental FirstSearch™ Report

TARGET PROPERTY:

WEED CA 96094

Job Number: 100511201

PREPARED FOR:

The Assessment Group, Inc.

7364 N. 122nd Ave Cir.

Omaha, NE 68142

10-07-05

Tel: (781) 551-0470 *Fax: (781) 551-0471*

Environmental FirstSearch is a registered trademark of FirstSearch Technology Corporation. All rights reserved.

Environmental FirstSearch
Search Summary Report

Target Site:

WEED CA 96094

FirstSearch Summary

Database	Sel	Updated	Radius	Site	1/8	1/4	1/2	1/2>	ZIP	TOTALS
NPL	Y	05-17-05	1.25	0	0	0	0	1	0	1
CERCLIS	Y	08-01-05	1.25	0	0	0	0	0	0	0
NFRAP	Y	08-01-05	1.25	0	0	0	0	0	0	0
RCRA TSD	Y	06-13-05	1.25	0	0	0	0	0	0	0
RCRA COR	Y	06-13-05	1.25	0	0	0	0	0	0	0
RCRA GEN	Y	06-13-05	1.25	0	0	0	0	1	2	3
ERNS	Y	12-31-04	1.25	0	0	0	0	0	27	27
State Sites	Y	05-04-05	1.25	0	0	0	0	0	0	0
Spills-1990	Y	07-01-03	1.25	0	0	0	0	0	0	0
SWL	Y	09-07-05	1.25	0	0	0	0	1	5	6
REG UST/AST	Y	04-05-05	1.25	0	0	0	0	1	9	10
Leaking UST	Y	05-10-05	1.25	0	0	0	0	2	9	11
- TOTALS -				0	0	0	0	6	52	58

Notice of Disclaimer

Due to the limitations, constraints, inaccuracies and incompleteness of government information and computer mapping data currently available to FirstSearch Technology Corp., certain conventions have been utilized in preparing the locations of all federal, state and local agency sites residing in FirstSearch Technology Corp.'s databases. All EPA NPL and state landfill sites are depicted by a rectangle approximating their location and size. The boundaries of the rectangles represent the eastern and western most longitudes; the northern and southern most latitudes. As such, the mapped areas may exceed the actual areas and do not represent the actual boundaries of these properties. All other sites are depicted by a point representing their approximate address location and make no attempt to represent the actual areas of the associated property. Actual boundaries and locations of individual properties can be found in the files residing at the agency responsible for such information.

Waiver of Liability

Although FirstSearch Technology Corp. uses its best efforts to research the actual location of each site, FirstSearch Technology Corp. does not and can not warrant the accuracy of these sites with regard to exact location and size. All authorized users of FirstSearch Technology Corp.'s services proceeding are signifying an understanding of FirstSearch Technology Corp.'s searching and mapping conventions, and agree to waive any and all liability claims associated with search and map results showing incomplete and or inaccurate site locations.

Environmental FirstSearch
Site Information Report

Request Date:	10-07-05	**Search Type:**	COORD
Requestor Name:	Tom Wilson	**Job Number:**	100511201
Standard:	ASTM		

TARGET ADDRESS:

WEED CA 96094

Demographics

Sites:	58	**Non-Geocoded:**	52	**Population:**	NA
Radon:	1.4 - 2.2 PCI/L				

Site Location

	Degrees (Decimal)	Degrees (Min/Sec)		UTMs
Longitude:	-122.374684	-122:22:29	**Easting:**	552230.538
Latitude:	41.452171	41:27:8	**Northing:**	4588930.322
			Zone:	10

Comment

Comment: PACIFICORP LINE 1 PROJECT

Additional Requests/Services

Adjacent ZIP Codes: 0 Mile(s)

ZIP Code	City Name	ST	Dist/Dir	Sel

Services:

	Requested?	Date
Sanborns	No	
Aerial Photographs	No	
Historical Topos	No	
City Directories	No	
Title Search	No	
Municipal Reports	No	
Online Topos	No	

Environmental FirstSearch
Sites Summary Report

TARGET SITE: WEED CA 96094

JOB: 100511201
PACIFICORP LINE 1 PROJECT

TOTAL: 58 **GEOCODED:** 6 **NON GEOCODED:** 52 **SELECTED:** 0

Map ID	DB Type	Site Name/ID/Status	Address	Dist/Dir	Page No.
1	NPL	J.H. BAXTER & CO. CAD000625731/FINAL	422 MILL ST WEED CA 96094	0.79 SE	1
3	SWL	INTERNATIONAL PAPER CO/ROSEBURG WO SWIS47-AA-0025/CLOSED	NW1/4 S6 T41N R4W MDB&M WEED CA	0.86 S-	3
2	LUST	ROSEBURG FOREST PRODUCTS T0609300035/LEAK BEING CONFIRMED	98 MILL STREET WEED CA 96094	1.24 SW	4
2	LUST	ROSEBURG LUMBER COMPANY T0609391402/LEAK BEING CONFIRMED	98 MILL STREET WEED CA	1.24 SW	5
2	RCRAGN	ROSEBURG FOREST PROD CO CAD982324519/SGN	98 MILL ST WEED CA 96094	1.24 SW	6
2	UST	ROSEBURG FOREST PRODUCTS TISID-STATE45704/ACTIVE	98 MILL WEED CA 96094	1.24 SW	7

Environmental FirstSearch
Sites Summary Report

TARGET SITE: WEED CA 96094

JOB: 100511201
PACIFICORP LINE 1 PROJECT

TOTAL: 58 **GEOCODED:** 6 **NON GEOCODED:** 52 **SELECTED:** 0

Map ID	DB Type	Site Name/ID/Status	Address	Dist/Dir	Page No.
	ERNS	UNKNOWN 321002/FIXED FACILITY	NB WEED REST AREA WEED CA 96094	NON GC	N/A
	ERNS	UNKNOWN 377701/UNKNOWN (NRC)	100 YDS E OF I-5 ON LOUIE R WEED CA 96094	NON GC	N/A
	ERNS	UNKNOWN 378578/UNKNOWN (NRC)	100 YDS E OF I-5 ON LOUIE R WEED CA 96094	NON GC	N/A
	ERNS	UNKNOWN 359328/FIXED FACILITY	SOUTH DAVIS ST AT NORTH DAV WEED CA 96094	NON GC	N/A
	ERNS	UNKNOWN 344375/UNKNOWN (NRC)	NE OF PORKY BOBS RESTAURANT WEED CA 96094	NON GC	N/A
	ERNS	UNKNOWN 263982/RAILROAD	NEAR BLACK BUTTE / MP 345.6 WEED CA 96094	NON GC	N/A
	ERNS	UNKNOWN 273575/HIGHWAY RELATED	NB I-5 TRUCK VILLAGE OFF RA WEED CA 96094	NON GC	N/A
	ERNS	UNKNOWN 241907/HIGHWAY RELATED	I-97 AT ANGEL VALLEY RD WEED CA	NON GC	N/A
	ERNS	UNION 76 167492/FIXED FACILITY	15 S. HWY 99 WEED CA	NON GC	N/A
	ERNS	UNKNOWN 486453/UNKNOWN (NRC)	SOUTHBOUND I-5, 1 MILE NORT WEED CA	NON GC	N/A
	ERNS	UNKNOWN 172875/HIGHWAY RELATED	SB HWY 97 AT SCALES PIT NOR WEED CA 96094	NON GC	N/A
	ERNS	UNKNOWN 263862/HIGHWAY RELATED	SB HWY 97 MP 18.8 WEED CA	NON GC	N/A
	ERNS	UNKNOWN 487143/HIGHWAY RELATED	SB SR97 NEAR NORTHWEED BLVD WEED CA	NON GC	N/A
	ERNS	UNKNOWN 241816/HIGHWAY RELATED	ST RT 97 ON NORTH SIDE HERB WEED CA	NON GC	N/A
	ERNS	TOP MATERIALS DIST INC 105144/UNKNOWN	NB I-5 AT PARKS CREEK WEED CA	NON GC	N/A
	ERNS	SOUTHERN PACIFIC RAILROAD 264043/FIXED FACILITY	WEED DEPOT MP 348.4 WEED CA	NON GC	N/A
	ERNS	NEAR BLACK BUTTE RD NRC-626907/RAILROAD NON-RELEASE	WEED CA	NON GC	N/A
	ERNS	LAKE SHASTINA PROP 373963/FIXED FACILITY	ACROSS ST FROM 6006 LAKE SH WEED CA	NON GC	N/A
	ERNS	LAKE SHASTINA PROP 373922/FIXED FACILITY	ACROSS ST FROM 6006 LAKE SH WEED CA	NON GC	N/A
	ERNS	(RP)PACIFIC POWER & LIGHT 13619/UNKNOWN	HWY I-97 @ WEED BLVD WEED CA	NON GC	N/A

Environmental FirstSearch
Sites Summary Report

TARGET SITE: WEED CA 96094

JOB: 100511201
PACIFICORP LINE 1 PROJECT

TOTAL: 58 **GEOCODED:** 6 **NON GEOCODED:** 52 **SELECTED:** 0

Map ID	DB Type	Site Name/ID/Status	Address	Dist/Dir	Page No.
	ERNS	UNKNOWN 487160/HIGHWAY RELATED	SBI 5 AT EDGEWOOD- 3 MILES WEED CA	NON GC	N/A
	ERNS	418616/HIGHWAY RELATED	S/B I-5 AT WEED REST AREA WEED CA 96094	NON GC	N/A
	ERNS	418620/FIXED FACILITY	200 EAST VISTA DR WEED CA 96094	NON GC	N/A
	ERNS	107645/UNKNOWN	622 MILL ST WEED CA	NON GC	N/A
	ERNS	513079/HIGHWAY RELATED	SR97, NORTH OF ANGEL VALLEY WEED CA	NON GC	N/A
	ERNS	UNKNOWN 486455/HIGHWAY RELATED	US 97 AT WEED BLVD WEED CA 96094	NON GC	N/A
	ERNS	18006/UNKNOWN	AT ONE OF THEIR PLANTS MILL WEED CA	NON GC	N/A
	LUST	WEED, CITY OF - LANDFILL T0609391136/LEAK BEING CONFIRMED	WEED CA	NON GC	N/A
	LUST	J. H. BAXTER T0609393199/LEAK BEING CONFIRMED	BAXTER DRIVE WEED CA 96094	NON GC	N/A
	LUST	BUTTEVILLE SCHOOL T0609300124/CASE CLOSED	EDGEWOOD ROAD EDGEWOOD CA 96094	NON GC	N/A
	LUST	MORGAN PRODUCTS T0609393189/REMEDIAL ACTION	ROSEBURG AVENUE WEED CA 96094	NON GC	N/A
	LUST	SP, GRASS LAKE T0609300079/CASE CLOSED	HIGHWAY 97 GRASS LAKE CA 96094	NON GC	N/A
	LUST	SP, WEED T0609300078/CASE CLOSED	ALAMO STREET WEED CA 96094	NON GC	N/A
	LUST	MARKET TRANSPORT, LIMITED T0609393322/CASE CLOSED	ROUTE I5, WEED REST WEED CA 96094	NON GC	N/A
	LUST	WEED, CITY OF - BURN DUMP (OLD) T0609391128/LEAK BEING CONFIRMED	WEED CA	NON GC	N/A
	LUST	WEED, CITY OF, ACQUISITION LOT T0609300132/CASE CLOSED	CROSS STREET CLAY WEED CA 96094	NON GC	N/A
	RCRAGN	INTERNATIONAL PAPER REMEDIATION PR CAL000122954/LGN	#1 ALAMO AVE WEED CA 96094	NON GC	N/A
	RCRAGN	PACIFIC BELL CAT080018526/SGN	1/2 MILE W/O WEED WEED CA 96094	NON GC	N/A
	SWL	WEED SWDS WMUD1A80168OSIS/ACTIVE	ANGEL VALLEY RD WEED CA 96094	NON GC	N/A
	SWL	ROSEBURG LUMBER COMPANY-SWDS WMUD1A83058OSIS/ACTIVE	ANGEL VALLEY RD WEED CA 96094	NON GC	N/A

Environmental FirstSearch
Sites Summary Report

TARGET SITE: WEED CA 96094

JOB: 100511201
PACIFICORP LINE 1 PROJECT

TOTAL: 58 **GEOCODED:** 6 **NON GEOCODED:** 52 **SELECTED:** 0

Map ID	DB Type	Site Name/ID/Status	Address	Dist/Dir	Page No.
	SWL	ROSEBURG FOREST PRODUCTS-WEED WMUD1A84107OSIS/ACTIVE	P.O.DRAWER A WEED CA 96094	NON GC	N/A
	SWL	BAXTER, J. H. WMUD1A83029OSIS/ACTIVE	MILL ST WEED CA 96094	NON GC	N/A
	SWL	WEED SWDS (OLD) WMUD1A890360NSI/ACTIVE	HIGHWAY 97 WEED CA 96094	NON GC	N/A
	UST	MOUNTAIN VIEW STATION SISKIYOUCO_100625/CUPA TYPE: UST	82 E VISTA DR WEED CA 96094	NON GC	N/A
	UST	WEED FOREST FIRE STATION AST2267/AST SWRCB REG.1	300 HWY 97 WEED CA	NON GC	N/A
	UST	WEED AIRPORT TISID-STATE45655/ACTIVE	0 I5 & AIRPORT RD WEED, CA 96094	NON GC	N/A
	UST	SISKIYOU COUNTY AIRPORT AST2472/AST SWRCB REG.1	305 BUTTE ST MONTAGUE CA 96094	NON GC	N/A
	UST	PACIFIC BELL/WEED TISID-STATE45682/ACTIVE	117 WEED WEED CA 96094	NON GC	N/A
	UST	HANDY STOP II TISID-STATE45607/ACTIVE	25 WEED WEED CA 96094	NON GC	N/A
	UST	CITY OF WEED SISKIYOUCO_608967/CUPA TYPE: UST	WEED CA 96094	NON GC	N/A
	UST	BP OIL CO FACILITY SITE #11242 TISID-STATE45604/ACTIVE	188 WEED WEED CA 96094	NON GC	N/A
	UST	SHELL GASOLINE SERV STATION TISID-STATE45612/ACTIVE	56 WEED WEED CA 96094	NON GC	N/A

Environmental FirstSearch
Site Detail Report

TARGET SITE: WEED CA 96094

JOB: 100511201
PACIFICORP LINE 1 PROJECT

NPL SITE

SEARCH ID: 1 **DIST/DIR:** 0.79 SE **MAP ID:** 1

NAME: J.H. BAXTER & CO.
ADDRESS: 422 MILL ST
WEED CA 96094
CONTACT: DANIEL SHANE

REV: 5/17/05
ID1: CAD000625731
ID2: 0900917
STATUS: FINAL
PHONE:

SITE INFORMATION

EVENT TYPE

SITE DISCOVERY BY:	EPA	**DISCOVERY DATE:**	11-01-80
SITE PROPOSED BY:	EPA	**PROPOSED DATE:**	06-24-88
FINAL LIST BY:	EPA	**FINAL LIST DATE:**	10-04-89

ACTIVITIES: MANUFACTURING PLANT

CONTAMINANTS: SOIL SEDIMENT GROUND WATER SURFACE WATER ORGANICS PAHS DIOXINS
METALS ARSENIC
SOURCE OF CONTAMINATION: DISCHARGE TO SEWER/SURFACE WATER; STORAGE - FINISHED PRODUCT;
INDUSTRIAL

CONTAMINATED: AGRICULTURAL; RESIDENTIAL; OTHER
THREATENED:

EVENT TYPE

SITE DISCOVERY BY:	EPA	**DISCOVERY DATE:**	11-01-80
SITE PROPOSED BY:	EPA	**PROPOSED DATE:**	06-24-88
FINAL LIST BY:	EPA	**FINAL LIST DATE:**	10-04-89

ACTIVITIES: MANUFACTURING PLANT

CONTAMINANTS: SOIL SEDIMENT GROUND WATER SURFACE WATER ORGANICS PAHS DIOXINS
METALS ARSENIC
SOURCE OF CONTAMINATION: DISCHARGE TO SEWER/SURFACE WATER; STORAGE - FINISHED PRODUCT;
INDUSTRIAL

CONTAMINATED: AGRICULTURAL; RESIDENTIAL; OTHER
THREATENED:

CONSTRUCTION COMPLETED DATE: 09/14/2001
CONSTRUCTION COMPLETED DATE: 09/14/2001

SITE DESCRIPTION

Conditions at proposal (October 15, 1984): J.H. Baxter Co. has owned and operated a wood-treatment facility at the base of Mount Shasta in Weed, Siskiyou County, California, since 1962. Prior to 1962, the plant was owned and operated by Long Bell Lumber Co. and International Paper Co. Roseburg Forest Products Co. owns and operates a lumber products facility adjacent to Baxter.

The chemicals used to treat wood include pentachlorophenol, arsenic compounds, and creosote. Analyses conducted by the company and the California Regional Water Quality Control Board (CRWQCB) detected arsenic, polynuclear aromatics, and pentachlorophenol in ground water beneath the site. Heavy metals, pentachlorophenol, tetrachlorophenol, and creosote have been detected in surface water downstream of the site.

CRWQCB issued the company a Cleanup and Abatement Order in March 1983 and a Cease and Desist Order in 1983. The company has installed

Continued on next page

TARGET SITE: WEED CA 96094

JOB: 100511201
PACIFICORP LINE 1 PROJECT

NPL SITE

SEARCH ID: 1 **DIST/DIR:** 0.79 SE **MAP ID:** 1

NAME: J.H. BAXTER & CO.
ADDRESS: 422 MILL ST
WEED CA 96094
CONTACT: DANIEL SHANE

REV: 5/17/05
ID1: CAD000625731
ID2: 0900917
STATUS: FINAL
PHONE:

monitoring wells and taken measures to collect and direct rainwater run-off.

Status (February 1986): CRWQCB ordered J.H. Baxter Co., International Paper Co., and Roseburg Forest Products Co. to develop a site characterization study in accordance with a workplan developed earlier by the companies.

In December 1985, EPA issued Notice Letters to the companies. In response, the companies agreed to meet with EPA to develop a workplan for a remedial investigation/feasibility study (RI/FS) to determine the type and extent of contamination at the site and identify alternatives for remedial action.

Two units at the facility that were regulated under Subtitle C of the Resource Conservation and Recovery Act (RCRA) have been closed. EPA and the State are now trying to determine if the closures meet RCRA requirements.

Status (June 24, 1988): EPA is proposing to place this previously proposed RCRA site on the NPL because it has a history of unwillingness to take corrective action. Although Baxter has had Interim Status since it filed part of a RCRA permit application on November 19, 1980, it has consistently sought to withdraw that filing since 1983, and has continued to dispute RCRA jurisdiction over its facility. By these actions, the company has shown itself to be unwilling to comply with numerous State and EPA Regional demands for cleanup and/or closure under RCRA and other statutes. The company does not dispute that soil and ground water at the site are contaminated; rather, it disputes the applicability of RCRA to those problems.

Because it appears unlikely that corrective action can be achieved quickly under RCRA, EPA is dealing with the contamination under Superfund. After lengthy negotiations failed with J.H. Baxter Co., International Paper Co., and Roseburg Forest Products Co. over their conduct of the RI/FS, EPA started an RI/FS in January 1987.

This site s score on the Hazard Ranking System, which EPA uses to evaluate sites for the NPL, has been revised. Therefore, EPA is soliciting comments on the revised score.

Status (October 4, 1989): EPA has placed this site on the NPL.

EPA released the final RI report in January 1989 and is preparing the FS. International Paper, J.H. Baxter, and Roseburg Forest Products are conducting treatability studies on soils and ground water. These data will be used in the FS to evaluate remedial alternatives.

FINAL DATE: 10/04/1989

FINAL DATE: 10/04/1989

Environmental FirstSearch
Site Detail Report

TARGET SITE: WEED CA 96094

JOB: 100511201
PACIFICORP LINE 1 PROJECT

SOLID WASTE LANDFILL SITE

SEARCH ID: 3 **DIST/DIR:** 0.86 S- **MAP ID:** 3

NAME: INTERNATIONAL PAPER CO/ROSEBURG WOOD
ADDRESS: NW1/4 S6 T41N R4W MDB&M
WEED CA
SISKIYOU
CONTACT:

REV: 05/19/05
ID1: SWIS47-AA-0025
ID2:
STATUS: CLOSED
PHONE:

SITE OPERATOR INFORMATION:

Operator:
Operator Address:
Permit Date:
Permit Status:
Land Use Name:
GIS Source for LAT and LONG: *Map*

SITE ACTIVITY INFORMATION:

Activity: *Wood Waste Disposal Site*
Accepted Waste:
Operational Status: *Closed*
Regulatory Status *Permitted*
Closure Date:
Closure Type:
Permitted Throughput with Units: *0*
Permitted Capacity with Units: *0*
Remaining Capacity with Units (landfills only): *0*
Permitted Total Acreage: *0*
Permitted Disposal Acreage: *0*
Last Tire Inspection Count: *0*
Last Tire Inspection Count Date:
Original Tire Inspection Count: *0*
Last Tire Inspection Count Date:
Inspection Frequency: *Annual*

SITE OWNER INFORMATION:

Owner: *Roseburg Forest Products*
Owner Phone: *5416792706*
Owner Address: *P.O.Box 1088*

Environmental FirstSearch
Site Detail Report

TARGET SITE: WEED CA 96094

JOB: 100511201
PACIFICORP LINE 1 PROJECT

LEAKING UNDERGROUND STORAGE TANKS

SEARCH ID: 5 **DIST/DIR:** 1.24 SW **MAP ID:** 2

NAME: ROSEBURG FOREST PRODUCTS
ADDRESS: 98 MILL STREET
WEED CA 96094
SISKIYOU
CONTACT:

REV: 05/10/05
ID1: T0609300035
ID2:
STATUS: LEAK BEING CONFIRMED
PHONE:

RELEASE DATA FROM THE CALIFORNIA STATE WATER RESOURCES CONTROL BOARD LUSTIS DATABASE

Please note that some data previously provided by the State Water Resources Control Board in the LUSTIS database is not currently being provided by the agency in the most recent edition. Incidents that occurred dating after the year 2000 may not have much information. Field headers with blank information following after should be interpreted as unreported by the agency.

LEAD AGENCY: *REGIONAL BOARD*
REGIONAL BOARD: *01*
LOCAL CASE NUMBER:
RESPONSIBLE PARTY: *MAX KIMMEL*
ADDRESS OF RESPONSIBLE PARTY: *P.O. BOX 1088*
SITE OPERATOR:
WATER SYSTEM:

CASE NUMBER: *1TSI041*
CASE TYPE: *OTHER*
SUBSTANCE LEAKED: *WASTE OIL*
SUBSTANCE QUANTITY:
LEAK CAUSE: *OTHER CAUSE*
LEAK SOURCE: *OTHER*
HOW LEAK WAS DISCOVERED: *NO DESCRIPTION*
DATE DISCOVERED (blank if not reported): *1989-10-24*
HOW LEAK WAS STOPPED:
STOP DATE (blank if not reported): *1989-10-24*
STATUS: *LEAK BEING CONFIRMED*
ABATEMENT METHOD (please note that not all code translations have been provided by the reporting agency): *NO ACTION REQUIRED-INCIDENT IS MINOR REQUIRING NO REMEDIAL ACTION*
ENFORCEMENT TYPE (please note that not all code translations have been provided by the reporting agency): *SEL*
DATE OF ENFORCEMENT (blank if not reported): *2001-11-28*

ENTER DATE (blank if not reported): *1989-11-28*
REVIEW DATE (blank if not reported): *2001-03-15*
DATE OF LEAK CONFIRMATION (blank if not reported): *1989-11-28*
DATE PRELIMINARY SITE ASSESSMENT PLAN WAS SUBMITTED (blank if not reported):
DATE PRELIMINARY SITE ASSESSMENT PLAN BEGAN (blank if not reported):
DATE POLLUTION CHARACTERIZATION PLAN BEGAN (blank if not reported):
DATE REMEDIATION PLAN WAS SUBMITTED (blank if not reported):
DATE REMEDIAL ACTION UNDERWAY (blank if not reported):
DATE POST REMEDIAL ACTION MONITORING BEGAN (blank if not reported):
DATE CLOSURE LETTER ISSUED (SITE CLOSED) (blank if not reported):
REPORT DATE (blank if not reported): *1989-10-24*

MTBE DATA FROM THE CALIFORNIA STATE WATER RESOURCES CONTROL BOARD LUSTIS DATABASE

MTBE DATE(Date of historical maximum MTBE concentration): *2001-10-17*
MTBE GROUNDWATER CONCENTRATION: *LESS THAN 1*
MTBE SOIL CONCENTRATION:
MTBE CNTS: *2*
MTBE FUEL: *0*
MTBE TESTED: *YES*
MTBE CLASS: *D*

Environmental FirstSearch
Site Detail Report

TARGET SITE: WEED CA 96094

JOB: 100511201
PACIFICORP LINE 1 PROJECT

LEAKING UNDERGROUND STORAGE TANKS

SEARCH ID: 6 **DIST/DIR:** 1.24 SW **MAP ID:** 2

NAME: ROSEBURG LUMBER COMPANY
ADDRESS: 98 MILL STREET
WEED CA
SISKIYOU
CONTACT:

REV: 12/11/02
ID1: T0609391402
ID2:
STATUS: LEAK BEING CONFIRMED
PHONE:

RELEASE DATA FROM THE CALIFORNIA STATE WATER RESOURCES CONTROL BOARD LUSTIS DATABASE

Please note that some data previously provided by the State Water Resources Control Board in the LUSTIS database is not currently being provided by the agency in the most recent edition. Incidents that occurred dating after the year 2000 may not have much information. Field headers with blank information following after should be interpreted as unreported by the agency.

LEAD AGENCY: *REGIONAL BOARD*
REGIONAL BOARD: *01*
LOCAL CASE NUMBER:
RESPONSIBLE PARTY: *BLANK RP*
ADDRESS OF RESPONSIBLE PARTY:
SITE OPERATOR: *ROSEBURG LUMBER COMPANY*
WATER SYSTEM:

CASE NUMBER: *1NSI041*
CASE TYPE: *UNDEFINED*
SUBSTANCE LEAKED: *WASTE OIL*
SUBSTANCE QUANTITY:
LEAK CAUSE:
LEAK SOURCE:
HOW LEAK WAS DISCOVERED:
DATE DISCOVERED (blank if not reported): *1/2/78*
HOW LEAK WAS STOPPED:
STOP DATE (blank if not reported):
STATUS: *LEAK BEING CONFIRMED*
ABATEMENT METHOD (please note that not all code translations have been provided by the reporting agency):
ENFORCEMENT TYPE (please note that not all code translations have been provided by the reporting agency):
DATE OF ENFORCEMENT (blank if not reported):

ENTER DATE (blank if not reported): *6/12/01*
REVIEW DATE (blank if not reported):
DATE OF LEAK CONFIRMATION (blank if not reported): *1/1/1965*
DATE PRELIMINARY SITE ASSESSMENT PLAN WAS SUBMITTED (blank if not reported):
DATE PRELIMINARY SITE ASSESSMENT PLAN BEGAN (blank if not reported):
DATE POLLUTION CHARACTERIZATION PLAN BEGAN (blank if not reported):
DATE REMEDIATION PLAN WAS SUBMITTED (blank if not reported):
DATE REMEDIAL ACTION UNDERWAY (blank if not reported):
DATE POST REMEDIAL ACTION MONITORING BEGAN (blank if not reported):
DATE CLOSURE LETTER ISSUED (SITE CLOSED) (blank if not reported):
REPORT DATE (blank if not reported): *1/2/78*

MTBE DATA FROM THE CALIFORNIA STATE WATER RESOURCES CONTROL BOARD LUSTIS DATABASE

MTBE DATE(Date of historical maximum MTBE concentration): *1/1/1965*
MTBE GROUNDWATER CONCENTRATION: *0*
MTBE SOIL CONCENTRATION: *0*
MTBE CNTS: *2*
MTBE FUEL: *0*
MTBE TESTED: *YES*
MTBE CLASS: *D*

Environmental FirstSearch
Site Detail Report

TARGET SITE: WEED CA 96094

JOB: 100511201
PACIFICORP LINE 1 PROJECT

RCRA GENERATOR SITE

SEARCH ID: 2 **DIST/DIR:** 1.24 SW **MAP ID:** 2

NAME: ROSEBURG FOREST PROD CO
ADDRESS: 98 MILL ST
WEED CA 96094
SISKIYOU
CONTACT: ENVIRONMENTAL MANAGER

REV: 6/13/05
ID1: CAD982324519
ID2:
STATUS: SGN
PHONE: 9169382721

SITE INFORMATION

CONTACT INFORMATION: ENVIRONMENTAL MANAGER
98 MILL ST
WEED CA 96094

PHONE: 9169382721

UNIVERSE INFORMATION:

SUBJCA NON TSD: N - NO
CA WRKLD: N - NO
GEN STATUS: SQG - SMALL QUANTITY GENERATOR: GENERATES 100 - 1000 KG/MONTH OF HAZARDOUS WASTE

PREM WRKLD: -----
CLOSURE WRKLD: -----
P C WRKLD: -----
SUBJCA: N - NO
SUBJCA TSD 3004: N - NO

NAIC INFORMATION

321211 - HARDWOOD VENEER AND PLYWOOD MANUFACTURING
321212 - SOFTWOOD VENEER AND PLYWOOD MANUFACTURING
321212 - SOFTWOOD VENEER AND PLYWOOD MANUFACTURING

ENFORCEMENT INFORMATION:

VIOLATION INFORMATION:

Environmental FirstSearch
Site Detail Report

TARGET SITE: WEED CA 96094

JOB: 100511201
PACIFICORP LINE 1 PROJECT

REGISTERED UNDERGROUND STORAGE TANKS

SEARCH ID: 4 **DIST/DIR:** 1.24 SW **MAP ID:** 2

NAME: ROSEBURG FOREST PRODUCTS
ADDRESS: 98 MILL
WEED CA 96094
Siskiyou
CONTACT:

REV: 01/01/94
ID1: TISID-STATE45704
ID2:
STATUS: ACTIVE
PHONE:

UST HISTORICAL DATA

This site was listed in the FIDS Zip Code List as a UST site. The Office of Hazardous Data Management produced the FIDS list. The FIDS list is an index of names & locations of sites recorded in various California State environmental agency databases. It is sorted by zip code and as an index, details regarding the sites were never included.

The UST information included in FIDS as provided by the Office of Hazardous Data Management was originally collected from the SWEEPS database. The SWEEPS database recorded Underground Storage Tanks and was maintained by the State Water Resources Control Board (SWRCB). That agency no longer maintains the SWEEPS database and last updated it in 1994. The last release of that 1994 database was in 1997.

Oversight of Underground Storage Tanks within California is now conducted by Certified Unified Program Agencies referred to as CUPA s. There are approximately 102 CUPA s and Local Oversight Programs (LOP s) in the State of California. Most are city or county government agencies. As of 1998, all sites or facilities with underground storage tanks were required by Federal mandate to obtain certification by designated UST oversight agencies (in this case, CUPA s) that the UST/s at their location were upgraded or removed in adherence with the 1998 RCRA standards.

Information from the FIDS/SWEEPS lists were included in this report search to help identify where underground storage tanks may have existed that were not recorded in CUPA databases or lists collected by Track Info Services. This may occur if a tank was removed prior to development of recent CUPA UST lists or never registered with a CUPA.

Environmental FirstSearch Database Descriptions

NPL: ***EPA*** NATIONAL PRIORITY LIST - Database of confirmed, proposed or deleted Superfund sites.

CERCLIS: ***EPA*** COMPREHENSIVE ENVIRONMENTAL RESPONSE COMPENSATION AND LIABILITY INFORMATION SYSTEM - Database of current and potential Superfund sites currently or previously under investigation.

NFRAP: ***EPA*** COMPREHENSIVE ENVIRONMENTAL RESPONSE COMPENSATION AND LIABILITY INFORMATION SYSTEM ARCHIVED SITES - database of Archive designated CERCLA sites that, to the best of EPA's knowledge, assessment has been completed and has determined no further steps will be taken to list this site on the National Priorities List (NPL). This decision does not necessarily mean that there is no hazard associated with a given site; it only means that, based upon available information, the location is not judged to be a potential NPL site.

RCRA TSD: ***EPA*** RESOURCE CONSERVATION AND RECOVERY INFORMATION SYSTEM TREATMENT, STORAGE, and DISPOSAL FACILITIES. - Database of facilities licensed to store, treat and dispose of hazardous waste materials.

RCRA COR: ***EPA*** RESOURCE CONSERVATION AND RECOVERY INFORMATION SYSTEM SITES - Database of RCRA facilities with reported violations and subject to corrective actions.

RCRA GEN: ***EPA*** RESOURCE CONSERVATION AND RECOVERY INFORMATION SYSTEM SITES - Database of facilities that generate or transport hazardous waste or meet other RCRA requirements.LGN - Large Quantity GeneratorsSGN - Small Quantity GeneratorsVGN – Conditionally Exempt Generator.Included are RAATS (RCRA Administrative Action Tracking System) and CMEL (Compliance Monitoring & Enforcement List) facilities.

ERNS: ***EPA/NRC*** EMERGENCY RESPONSE NOTIFICATION SYSTEM - Database of emergency response actions. Data since January 2001 has been received from the National Response System database as the EPA no longer maintains this data.

STATE SITES: ***CA EPA*** SMBRPD / CAL SITES- The California Department of Toxic Substances Control (DTSC) has developed an electronic database system with information about sites that are known to be contaminated with hazardous substances as well as information on uncharacterized properties where further studies may reveal problems. The Site Mitigation and Brownfields Reuse Program Database (SMBRPD), also known as CalSites, is used primarily by DTSC's staff as an informational tool to evaluate and track activities at properties that may have been affected by the release of hazardous substances.The SMBRPD displays information in six categories. The categories are:1. CalSites Properties (CS)2. School Property Evaluation Program Properties (SCH)3. Voluntary Cleanup Program Properties (VCP)4. Unconfirmed Properties Needing Further Evaluation (RFE)Please Note: FirstSearch Reports list the above sites as DB Type (STATE).5. Unconfirmed Properties Referred to Another Local or State Agency (REF)6. Properties where a No Further

Action Determination has been made (NFA)Please Note: FirstSearch Reports list the above sites as DB Type (OTHER).Each Category contains information on properties based upon the type of work taking place at the site. For example, the CalSites database is now one of the six categories within SMPBRD and contains only confirmed sites considered as posing the greatest threat to the public and/or the potential public school sites will be found within the School Property Evaluation Program, and those properties undergoing voluntary investigation and/or cleanup are in the Voluntary Cleanup Program.CORTESE LIST-Pursuant to Government Code Section 65962.5, the Hazardous Waste and Substances Sites List has been compiled by Cal/EPA, Hazardous Materials Data Management Program. The CAL EPA Dept. of Toxic Substances Control compiles information from subsets of the following databases to make up the CORTESE list:1. The Dept. of Toxic Substances Control; contaminated or potentially contaminated hazardous waste sites listed in the CAL Sites database. Formerly known as ASPIS are included (CALSITES formerly known as ASPIS).2. The California State Water Resources Control Board; listing of Leaking Underground Storage Tanks are included (LTANK)3. The California Integrated Waste Management Board; Sanitary Landfills which have evidence of groundwater contamination or known migration of hazardous materials (formerly WB-LF, now AB 3750).Note: Track Info Services collects each of the above data sets individually and lists them separately in the following First Search categories in order to provide more current and comprehensive information: CALSITES: SPL, LTANK: LUST, WB-LF: SWL

SPILLS-1990: ***CA EPA*** SLIC REGIONS 1 - 9- The California Regional Water Quality Control Boards maintain report of sites that have records of spills, leaks, investigation, and cleanups.

SWL: ***CA IWMB/SWRCB/COUNTY*** SWIS SOLID WASTE INFORMATION SYSTEM-The California Integrated Waste Management Board maintains a database on solid waste facilities, operations, and disposal sites throughout the state of California. The types of facilities found in this database include landfills, transfer stations, material recovery facilities, composting sites, transformation facilities, waste tire sites, and closed disposal sites. For more information on individual sites call the number listed in the source field..Please Note: This database contains poor site location information for many sites in the First Search reports; therefore, it may not be possible to locate or plot some sites in First Search reports.WMUDS-The State Water Resources Control Board maintained the Waste Management Unit Database System (WMUDS). It is no longer updated. It tracked management units for several regulatory programs related to waste management and its potential impact on groundwater. Two of these programs (SWAT & TPCA) are no longer on-going regulatory programs as described below. Chapter 15 (SC15) is still an on-going regulatory program and information is updated periodically but not to the WMUDS database. The WMUDS System contains information from the following agency databases: Facility, Waste Management Unit (WMU), Waste Discharger System (WDS), SWAT, Chapter 15, TPCA, RCRA, Inspections, Violations, and Enforcement's.Note: This database contains poor site location information for many sites in the First Search reports; therefore, it may not be possible to locate or plot some sites in First Search reports.ORANGE COUNTY LANDFILLS LIST- A list maintained by the Orange County Health Department.

REG UST/AST: ***CA EPA/COUNTY/CITY*** ABOVEGROUND STORAGE TANKS LISTING-The Above Ground Petroleum Storage Act became State Law effective January 1, 1990. In general, the law requires owners or operators of AST's with petroleum products to file a storage statement and pay a fee by July 1, 1990 and every two years thereafter, take specific action to prevent spills, and in certain instances implement a groundwater monitoring program. This law does not apply to that portion of a tank facility associated with the production oil and regulated by the State Division of Oil and Gas of the Dept. of Conservation.SWEEPS / FIDS STATE REGISTERED UNDEGROUND STORAGE TANKS- Until 1994 the State Water Resources Control Board maintained a database of registered underground storage tanks statewide referred to as the SWEEPS System. The SWEEPS UST information was integrated with the CAL EPA's Facility Index System database (FIDS) which is a master index of information from numerous California agency environmental databases. That was last updated in 1994. Track Info Services included the UST information from the FIDS database in its First Search reports for historical purposes to help its clients identify where tanks may possibly have existed. For more information on specific sites from individual paper files archived at the State Water Resources Control Board call the number listed with the source information.INDIAN LANDS UNDERGROUND STORAGE TANKS LIST- A listing of underground storage tanks currently on Indian Lands under federal jurisdiction. California Indian Land USTS are administered by US EPA Region 9.CUPA DATABASES & SOURCES-

Definition of a CUPA: A Certified Unified Program Agency (CUPA) is a local agency that has been certified by the CAL EPA to implement six state environmental programs within the local agency's jurisdiction. These can be a county, city, or JPA (Joint Powers Authority). This program was established under the amendments to the California Health and Safety Code made by SB 1082 in 1994.A Participating Agency (PA) is a local agency that has been designated by the local CUPA to administer one or more Unified Programs within their jurisdiction on behalf of the CUPA. A Designated Agency (DA) is an agency that has not been certified by the CUPA but is the responsible local agency that would implement the six unified programs until they are certified.Please Note: Track Info Services, LLC collects and maintains information regarding Underground Storage Tanks from majority of the CUPAS and Participating Agencies in the State of California. These agencies typically do not maintain nor release such information on a uniform or consistent schedule; therefor, currency of the data may vary. Please look at the details on a specific site with a UST record in the First Search Report to determine the actual currency date of the record as provided by the relevant agency. Numerous efforts are made on a regular basis to obtain updated records.

LEAKING UST: ***CA SWRCB/COUNTY*** LUSTIS- The State Water Resources Control Board maintains a database of sites with confirmed or unconfirmed leaking underground storage tanks. Information for this database is collected from the states regional boards quarterly and integrated with this database.SAN DIEGO COUNTY LEAKING TANKS- The San Diego County Department of Environmental Health maintains a database of sites with confirmed or unconfirmed leaking underground storage tanks within its HE17/58 database. For more information on a specific file call the HazMat Duty Specialist at phone number listed in the source information field.

RADON: ***NTIS*** NATIONAL RADON DATABASE - EPA radon data from 1990-1991 national radon project collected for a variety of zip codes across the United States.

Environmental FirstSearch Database Sources

NPL: ***EPA*** Environmental Protection Agency

Updated quarterly

CERCLIS: ***EPA*** Environmental Protection Agency

Updated quarterly

NFRAP: ***EPA*** Environmental Protection Agency.

Updated quarterly

RCRA TSD: ***EPA*** Environmental Protection Agency.

Updated quarterly

RCRA COR: ***EPA*** Environmental Protection Agency.

Updated quarterly

RCRA GEN: ***EPA*** Environmental Protection Agency.

Updated quarterly

ERNS: ***EPA/NRC*** Environmental Protection Agency

Updated semi-annually

STATE SITES: ***CA EPA*** The CAL EPA, Depart. Of Toxic Substances Control
Phone: (916) 323-3400

Updated quarterly/when available

SPILLS-1990: ***CA EPA*** The California State Water Resources Control Board

Updated when available

SWL: ***CA IWMB/SWRCB/COUNTY*** The California Integrated Waste Management Board
Phone:(916) 255-2331
The State Water Resources Control Board
Phone:(916) 227-4365
Orange County Health Department

Updated quarterly/when available

REG UST/AST: ***CA EPA/COUNTY/CITY*** The State Water Resources Control Board
Phone:(916) 227-4364
CAL EPA Department of Toxic Substances Control
Phone:(916)227-4404
US EPA Region 9 Underground Storage Tank Program
Phone: (415) 972-3372
ALAMEDA COUNTY CUPAS:
* County of Alameda Department of Environmental Health
* Cities of Berkeley, Fremont, Hayward, Livermore / Pleasanton, Newark, Oakland, San Leandro, Union
ALPINE COUNTY CUPA:
* Health Department (Only updated by agency sporadically)
AMADOR COUNTY CUPA:
* County of Amador Environmental Health Department
BUTTE COUNTY CUPA
* County of Butte Environmental Health Division (Only updated by agency biannually)
CALAVERAS COUNTY CUPA:
* County of Calaveras Environmental Health Department
COLUSA COUNTY CUPA:
* Environmental Health Dept.
CONTRA COSTA COUNTY CUPA:
* Hazardous Materials Program
DEL NORTE COUNTY CUPA:
* Department of Health and Social Services
EL DORADO COUNTY CUPAS:
* County of El Dorado Environmental Health - Solid Waste Div (Only updated by agency annually)
* County of El Dorado EMD Tahoe Division (Only updated by agency annually)
FRESNO COUNTY CUPA:
* Haz. Mat and Solid Waste Programs
GLENN COUNTY CUPA:
* Air Pollution Control District
HUMBOLDT COUNTY CUPA:
* Environmental Health Division
IMPERIAL COUNTY CUPA:
* Department of Planning and Building
INYO COUNTY CUPA:
* Environmental Health Department
KERN COUNTY CUPA:
* County of Kern Environmental Health Department
* City of Bakersfield Fire Department
KINGS COUNTY CUPA:
* Environmental Health Services
LAKE COUNTY CUPA:
* Division of Environmental Health
LASSEN COUNTY CUPA:
* Department of Agriculture
LOS ANGELES COUNTY CUPAS:
* County of Los Angeles Fire Department CUPA Data as maintained by the Los Angeles County Department of Public Works
* County of Los Angeles Environmental Programs Division
* Cities of Burbank, El Segundo, Glendale, Long Beach/Signal Hill, Los Angeles,Pasadena, Santa Fe Springs, Santa Monica, Torrance, Vernon
MADERA COUNTY CUPA:
* Environmental Health Department
MARIN COUNTY CUPA:
* County of Marin Office of Waste Management
* City of San Rafael Fire Department
MARIPOSA COUNTY CUPA:
* Health Department
MENDOCINO COUNTY CUPA:
* Environmental Health Department
MERCED COUNTY CUPA:

* Division of Environmental Health
MODOC COUNTY CUPA:
* Department of Agriculture
MONO COUNTY CUPA:
* Health Department
MONTEREY COUNTY CUPA:
* Environmental Health Division
NAPA COUNTY CUPA:
* Hazardous Materials Section
NEVADA COUNTY CUPA:
* Environmental Health Department
ORANGE COUNTY CUPAS:
* County of Orange Environmental Health Department
* Cities of Anaheim, Fullerton, Orange, Santa Ana
* County of Orange Environmental Health Department
PLACER COUNTY CUPAS:
* County of Placer Division of Environmental Health Field Office
* Tahoe City
* City of Roseville Roseville Fire Department
PLUMAS COUNTY CUPA:
* Environmental Health Department
RIVERSIDE COUNTY CUPA:
* Environmental Health Department
SACRAMENTO COUNTY CUPA:
* County Environmental Mgmt Dept, Haz. Mat. Div.
SAN BENITO COUNTY CUPA:
* City of Hollister Environmental Service Department
SAN BERNARDINO COUNTY CUPAS:
* County of San Bernardino Fire Department, Haz. Mat. Div.
* City of Hesperia Hesperia Fire Prevention Department
*City of Victorville Victorville Fire Department
SAN DIEGO COUNTY CUPA:
* The San Diego County Dept. of Environmental Health HE 17/58
SAN FRANCISCO COUNTY CUPA:
* Department of Public Health
SAN JOAQUIN COUNTY CUPA:
* Environmental Health Division
SAN LUIS OBISPO COUNTY CUPAS:
* County of San Luis Obispo Environmental Health Division
* City of San Luis Obispo City Fire Department
SAN MATEO COUNTY CUPA:
* Environmental Health Department
SANTA BARBARA COUNTY CUPA:
* County Fire Dept Protective Services Division
SANTA CLARA COUNTY CUPAS:
* County of Santa Clara Hazardous Materials Compliance Division
* Santa Clara County Central Fire Protection District (Covers Campbell, Cupertino, Los Gatos, & Morgan Hill)
* Cities of Gilroy, Milpitas, Mountain View, Palo Alto, San Jose Fire, Santa Clara, Sunnyvale
SANTA CRUZ COUNTY CUPA:
* Environmental Health Department
SHASTA COUNTY CUPA:
* Environmental Health Department
SIERRA COUNTY CUPA:
* Health Department
SISKIYOU COUNTY CUPA:
* Environmental Health Department
SONOMA COUNTY CUPAS:
* County of Sonoma Department Of Environmental Health
* Cities of Healdsburg / Sebastopol, Petaluma, Santa Rosa
STANISLAUS COUNTY CUPA:
* Department of Environmental Resources Haz. Mat. Division

SUTTER COUNTY CUPA:
* Department of Agriculture
TEHAMA COUNTY CUPA:
* Department of Environmental Health
TRINITY COUNTY CUPA:
* Department of Health
TULARE COUNTY CUPA:
* Environmental Health Department
TUOLUMNE COUNTY CUPA:
* Environmental Health
VENTURA COUNTY CUPAS:
* County of Ventura Environmental Health Division
* Cities of Oxnard, Ventura
YOLO COUNTY CUPA:
* Environmental Health Department
YUBA COUNTY CUPA:

Updated quarterly/annually/when available

LEAKING UST: ***CA SWRCB/COUNTY*** The California State Water Resources Control Board
Phone:(916) 227-4416
San Diego County Department of Environmental Health

Updated quarterly/when available

RADON: ***NTIS*** Environmental Protection Agency, National Technical Information Services

Updated periodically

Environmental FirstSearch
Street Name Report for Streets within .25 Mile(s) of Target Property

TARGET SITE: WEED CA 96094

JOB: 100511201
PACIFICORP LINE 1 PROJECT

Street Name	Dist/Dir	Street Name	Dist/Dir
Rainbow Way	0.23 NE		

Environmental FirstSearch

1 Mile Radius

ASTM Map: NPL, RCRACOR, STATE Sites

, WEED CA 96094

Source: 2002 U.S. Census TIGER Files

Target Site (Latitude: 41.452171 Longitude: -122.374684) .....

Identified Site, Multiple Sites, Receptor .....

NPL, Brownfield, Solid Waste Landfill (SWL) or Hazardous Waste

.ilroads .....

Black Rings Represent 1/4 Mile Radius; Red Ring Represents 500 ft. Radius

Environmental FirstSearch

.5 Mile Radius

ASTM Map: CERCLIS, RCRATSD, LUST, SWL

, WEED CA 96094

Source: 2002 U.S. Census TIGER Files

Target Site (Latitude: 41.452171 Longitude: -122.374684) .....

Identified Site, Multiple Sites, Receptor .....

NPL, Brownfield, Solid Waste Landfill (SWL) or Hazardous Waste

ailroads .....

Black Rings Represent 1/4 Mile Radius; Red Ring Represents 500 ft. Radius

Environmental FirstSearch

.25 Mile Radius

ASTM Map: RCRAGEN, ERNS, UST

, WEED CA 96094

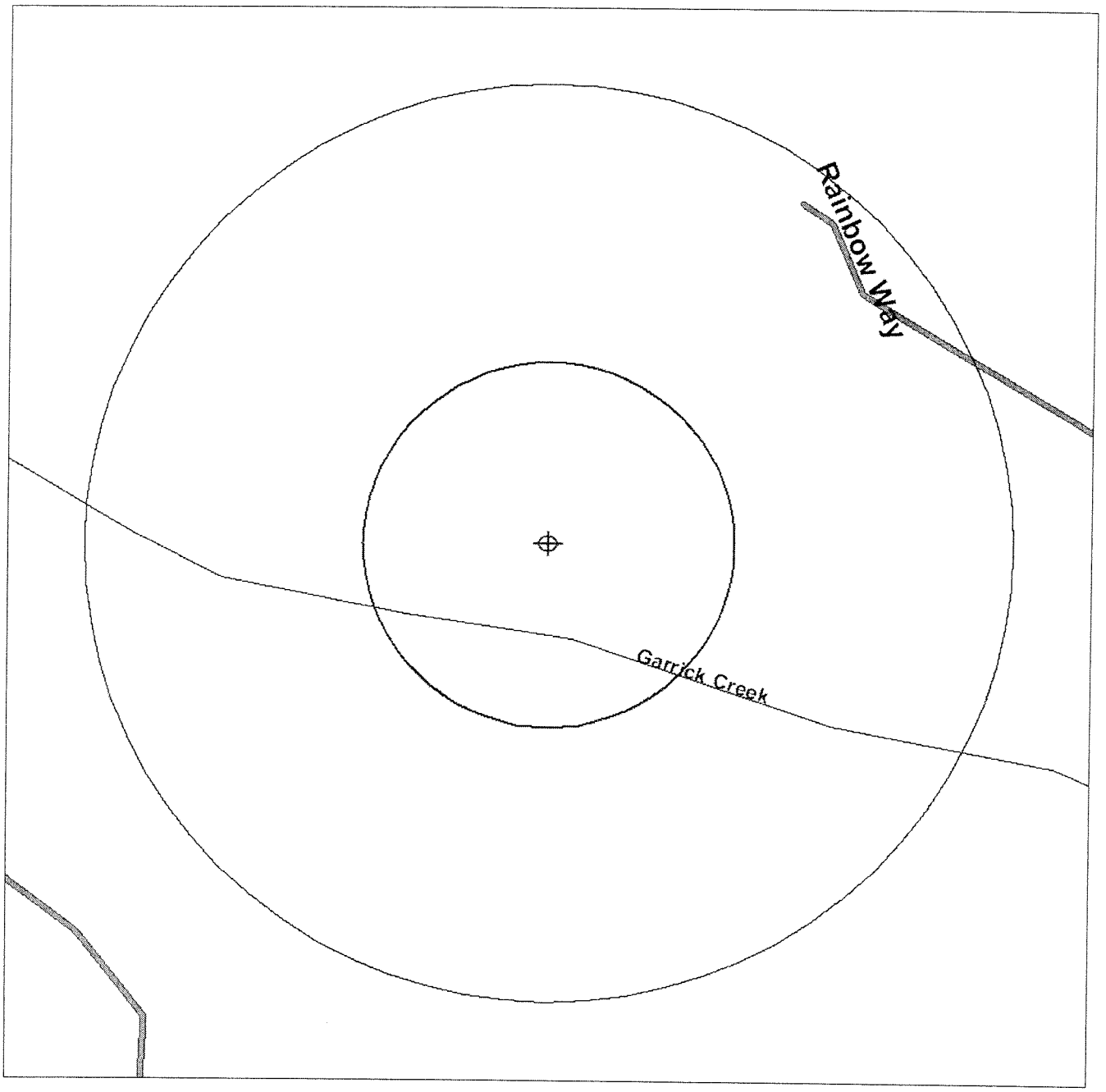

Source: 2002 U.S. Census TIGER Files

Target Site (Latitude: 41.452171 Longitude: -122.374684) .....

Identified Site, Multiple Sites, Receptor .....

NPL, Brownfield, Solid Waste Landfill (SWL) or Hazardous Waste

lroads .....

Black Rings Represent 1/4 Mile Radius; Red Ring Represents 500 ft. Radius

Environmental FirstSearch

.5 Mile Radius

ASTM AAI Map: Brownfield

, WEED CA 96094

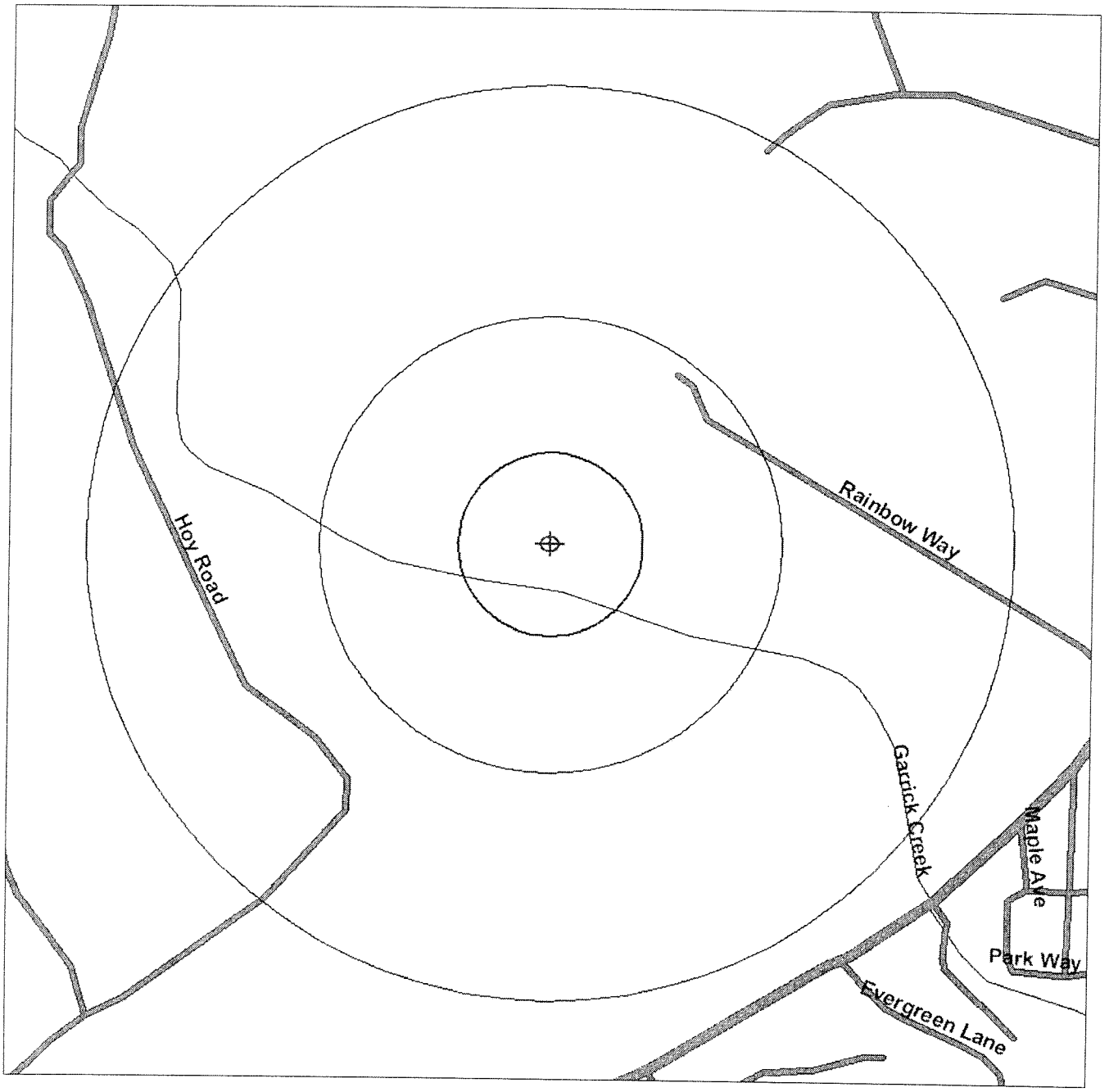

Source: 2002 U.S. Census TIGER Files

Target Site (Latitude: 41.452171 Longitude: -122.374684) .....

Brownfield.....

Railroads .....

ck Rings Represent 1/4 Mile Radius; Red Ring Represents 500 ft. Radius

Environmental FirstSearch

.5 Mile Radius

ASTM AAI Map: Federal Land Use Sites

, WEED CA 96094

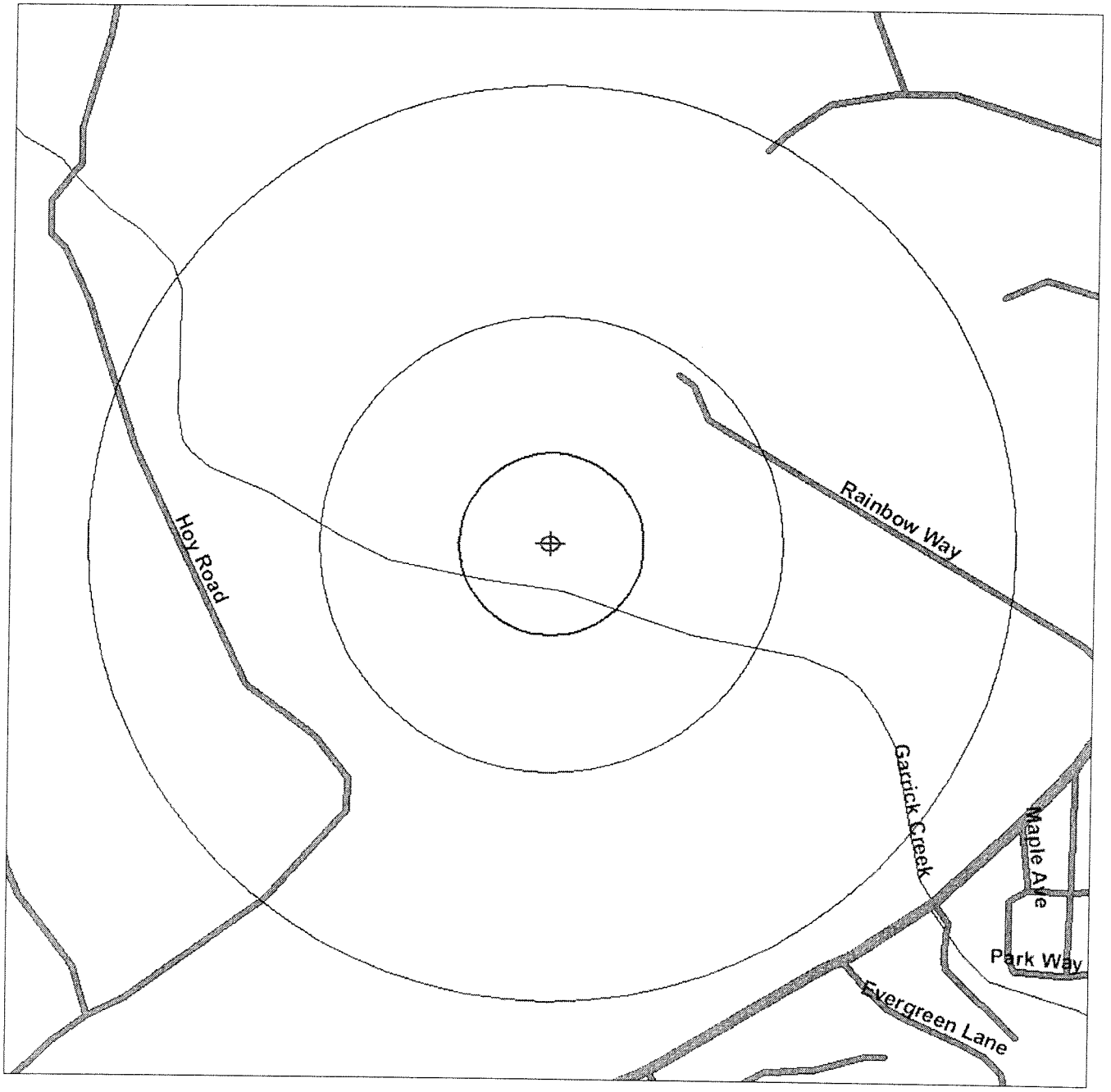

Source: 2002 U.S. Census TIGER Files

Target Site (Latitude: 41.452171 Longitude: -122.374684) .....

Fed. Land Use: Wilderness Areas, Wildlife Preserves .....

Fed. Land Use: Amer. Indian Sacred Sites, End. Species' Habitats...

lroads .....

Black Rings Represent 1/4 Mile Radius; Red Ring Represents 500 ft. Radius

Environmental FirstSearch

.25 Mile Radius

Non-ASTM Map: No Sites Found

, WEED CA 96094

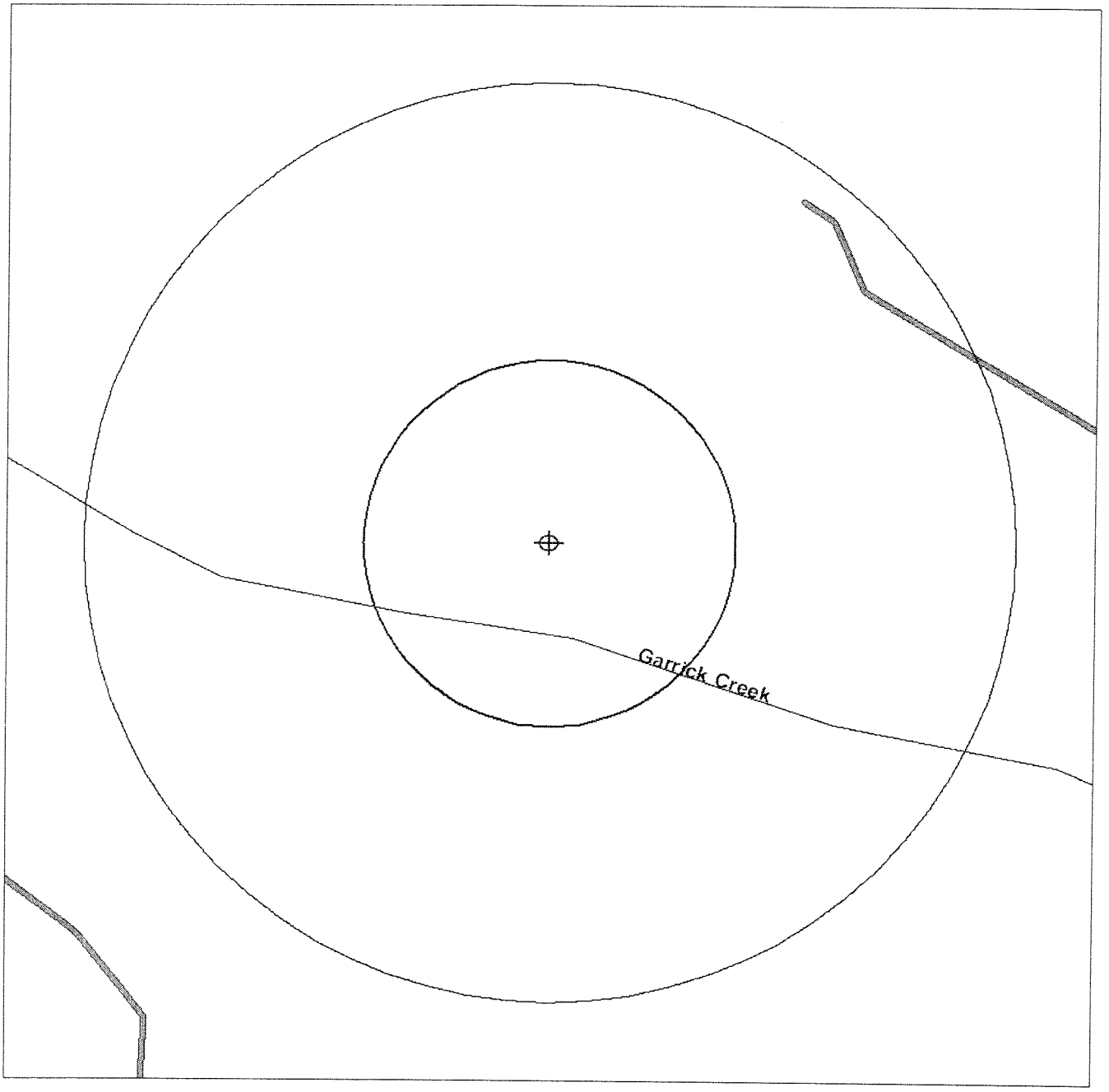

Source: 2002 U.S. Census TIGER Files

Target Site (Latitude: 41.452171 Longitude: -122.374684) .....

Identified Site, Multiple Sites, Receptor .....

NPL, Brownfield, Solid Waste Landfill (SWL) or Hazardous Waste

tional Historic Sites and Landmark Sites .....

Railroads .....

Black Rings Represent 1/4 Mile Radius; Red Ring Represents 500 ft. Radius

USGS 2 km SW of Weed, California, United States 14 Aug 1998

0 .5Km 0 .25Mi

Image courtesy of the U.S. Geological Survey
© 2004 Microsoft Corporation. **Terms of Use** **Privacy Statement**

Send To Printer Back To TerraServer Change to 11x17 Print Size Show Grid Lines Change to Landscape

USGS 2 km SW of Weed, California, United States 01 Jul 1986

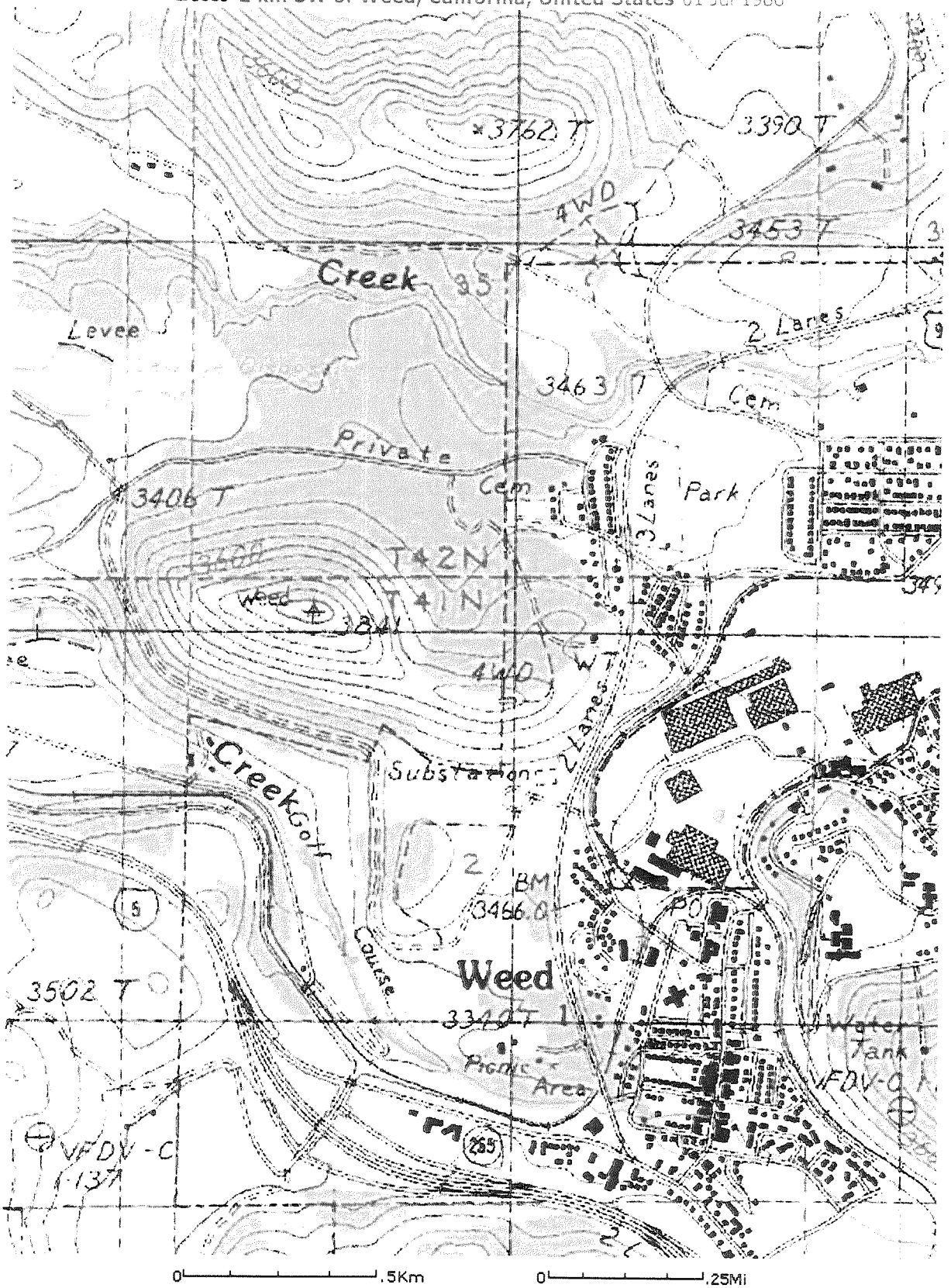

Image courtesy of the U.S. Geological Survey
© 2004 Microsoft Corporation. Terms of Use Privacy Statement

Send To Printer Back To TerraServer Change to 11x17 Print Size Show Grid Lines Change to Landscape

USGS **Weed, California, United States** 01 Jul 1979

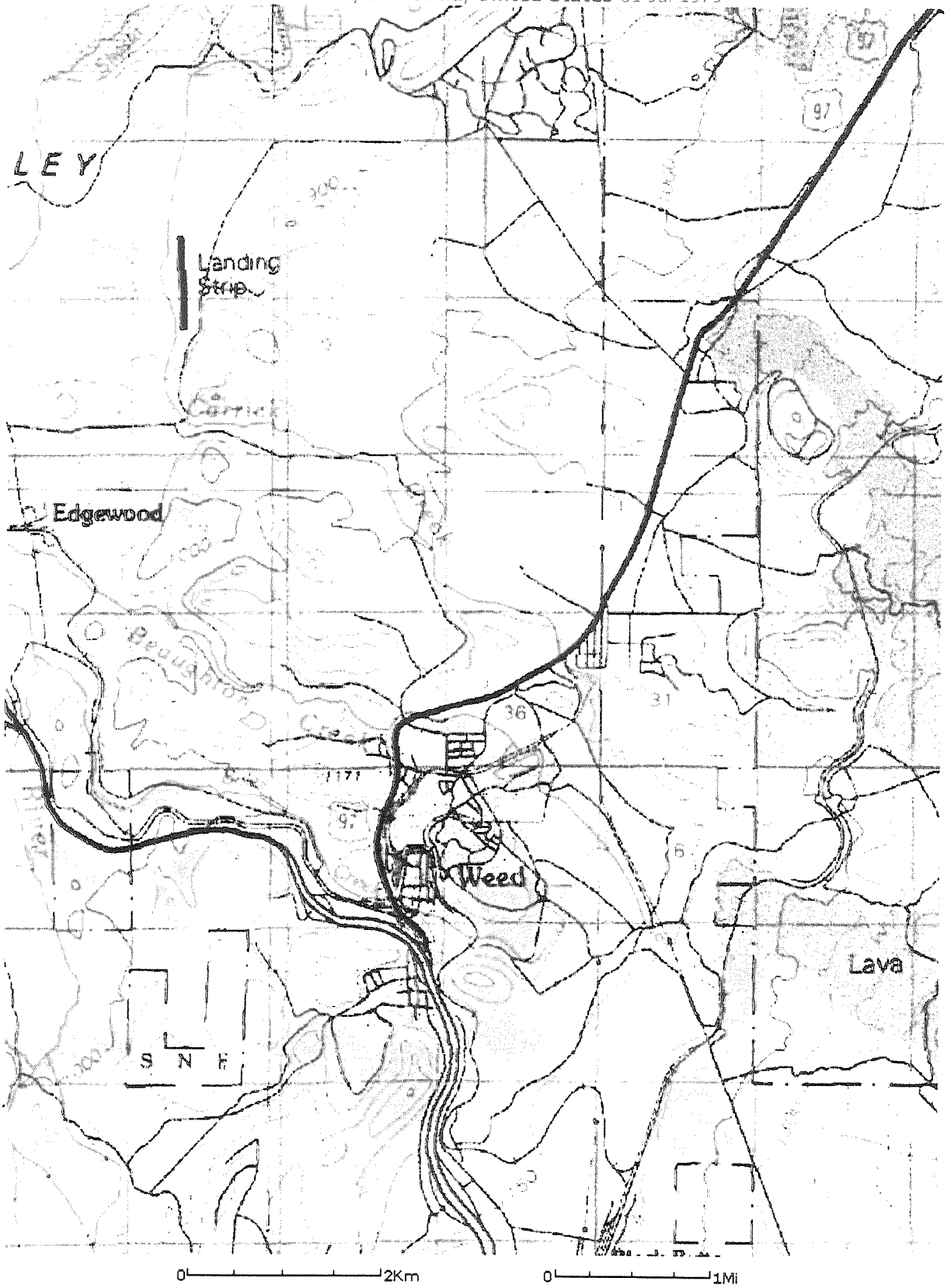

Image courtesy of the U.S. Geological Survey
© 2004 Microsoft Corporation. **Terms of Use** **Privacy Statement**

Send To Printer Back To TerraServer Change to 11x17 Print Size Show Grid Lines Change to Landscape

USGS Weed, California, United States 01 Jul 1979

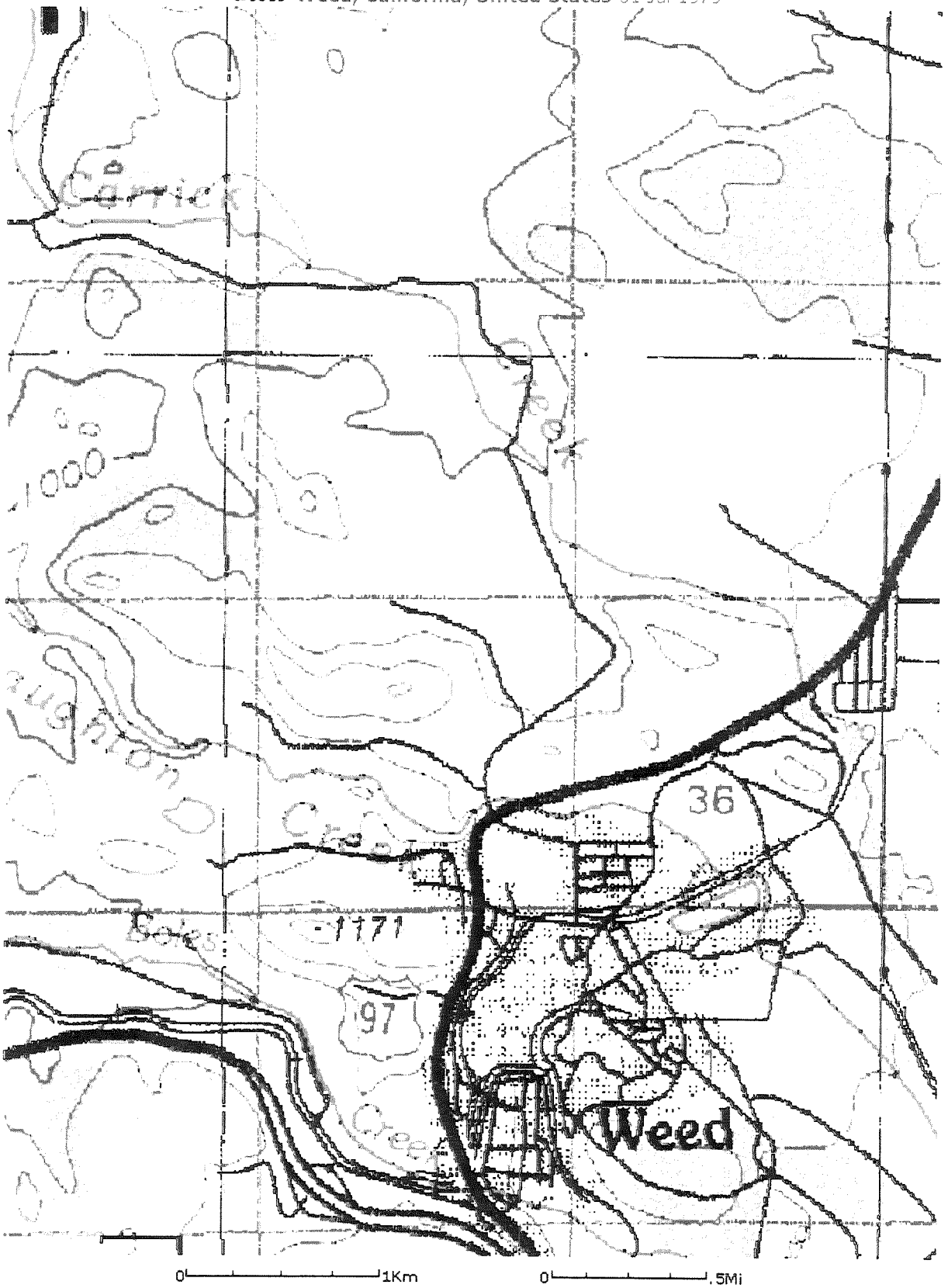

Image courtesy of the U.S. Geological Survey
© 2004 Microsoft Corporation. Terms of Use Privacy Statement

APPENDIX G
NATIVE AMERICAN CONTACTS

SWCA

FACSIMILE TRANSMITTAL

Transmitted By:

Name: Robert Herrmann Date: 09/07/05

Number of Pages (including cover sheet): 3

Please Deliver To:

Name: Debbie Pilas-Treadway

Company: Native American Heritage Commission, 915 Capitol Mall, Sacramento, 95814

Fax No.: (916) 657-5390 Office PH: (916) 653-4038

Subject: Data Request for Weed Line-1 Survey, Siskiyou County. Project No.: Pending

Remarks:

This request for a search of the Sacred Lands Files for the sections noted below. The project area (including a ¼ mile buffer) falls roughly within:

T42N, R4W, Sec. 30 on the Hotlum, CA 7.5' USGS topographic map.

T42N, R5W, Sec. 25, 36 on the Hotlum, CA 7.5' USGS topographic map.

T42N, R5W, Sec. 7, 8, 16, 17, 21, 22, 25, 26, 27, 35, 36 on the Weed, CA 7.5' USGS topographic map.

T42N, R5W, Sec. 6, 7, 8 on the Lake Shastina, CA 7.5' USGS topographic map.

T43N, R5W, Sec. 30, 31 on the Lake Shastina, CA 7.5' USGS topographic map.

T43N, R6W, Sec. 2, 11, 13, 14, 24, 25 on the Lake Shastina, CA 7.5' USGS topographic map.

T43N, R6W, Sec. 2, 3, 11 on the Gazelle, CA 7.5' USGS topographic map.

T44N, R6W, Sec. 34 on the Gazelle, CA 7.5' USGS topographic map.

T44N, R6W, Sec. 22, 27, 34 on the Montague, CA 7.5' USGS topographic map.

T45N, R6W, Sec. 33 on the Montague, CA 7.5' USGS topographic map.

We are transmitting from Fax. No. (916) 656-0757
If you do not receive all pages or if the transmission is not legible,
please contact the sender at your earliest convenience.

I would like the following information:

- Identification by NAHC of any sacred lands within the subject lands (project area plus ¼ mile radius) that are listed in its Sacred Lands File
- Groups or individuals the NAHC believes should be notified regarding this project.

Thank you for your assistance with this request. Please call me if there are any questions.

Sincerely,

Robert Herrmann, Senior Archaeologist
SWCA Environmental Consultants
4221 Northgate Blvd., Suite 7
Sacramento, CA 95834

Email: rherrmann@swca.com
Office: 916-565-0356
Fax: 916-565-0705
Cell: 916-955-6012

STATE OF CALIFORNIA Arnold Schwarzenegger, Governor

NATIVE AMERICAN HERITAGE COMMISSION
915 CAPITOL MALL, ROOM 364
SACRAMENTO, CA 95814
(916) 653-4082
Fax (916) 657-5390
Web Site www.nahc.ca.gov

September 20, 2005

Robert Hermann
SWCA
4221 Northgate Blvd., Suite 7
Sacramento, CA 95834

Sent by Fax: 916-565-0705
Number of Pages: 3

Re: Proposed Weed Line-1 Survey, Siskiyou County

Dear Mr. Hermann:

A record search of the sacred land file has failed to indicate the presence of Native American cultural resources in the immediate project area. The absence of specific site information in the sacred lands file does not indicate the absence of cultural resources in any project area. Other sources of cultural resources should also be contacted for information regarding known and recorded sites.

Enclosed is a list of Native Americans individuals/organizations who may have knowledge of cultural resources in the project area. The Commission makes no recommendation or preference of a single individual, or group over another. This list should provide a starting place in locating areas of potential adverse impact within the proposed project area. I suggest you contact all of those indicated, if they cannot supply information, they might recommend others with specific knowledge. By contacting all those listed, your organization will be better able to respond to claims of failure to consult with the appropriate tribe or group. If a response has not been received within two weeks of notification, the Commission requests that you follow-up with a telephone call to ensure that the project information has been received.

If you receive notification of change of addresses and phone numbers from any of these individuals or groups, please notify me. With your assistance we are able to assure that our lists contain current information. If you have any questions or need additional information, please contact me at (916) 653-6251.

Sincerely,

for Carol Gaubatz
Program Analyst

Native American Contacts
Siskiyou County
September 20, 2005

Ajumawi Band Cultural Resources Representative
Virginia Mercado
40538 McArthur Rd. Pit River
McArthur , CA 96028

Atwamsini Band, Pit River Indians
Herb Quinn
P.O. Box 513 Atwamsini
McArthur , CA 96056 Pit River

Ajumawi Band Cultural Resources Representative
Uriel Chacon
36966 Oak St. Pit River
Burney , CA 96013

Illmawi Band, Pit River Indian Tribe
Cecelia Silvas
P.O. Box 48 Pit River - Illmawi
Fall River Mills , CA 96028
530-941-9490

Ajumawi Band Cultural Resources Representative
Selena Vargas
36966 Oak St. Pit River
Burney , CA 96013

Illmawi Band, Pit River Indians
Hishkama Wilson
P.O. Box 462 Pit River
Fall River Mills , CA 96028 Illmawi

Atwamsini Band, Pit River Indians
Wally Preston
P.O. Box 1315 Atwamsini
Alturas , CA 96101 Pit River

Madesi Band Cultural Resource Representative
Carol Cantrell
P.O. Box 203 Pit River
Montgomery , CA 96065 Madesi

Atwamsini Band, Pit River Indians
Mary Preston
P.O. Box 1315 Atwamsini
Alturas , CA 96101 Pit River

Madesi Band Cultural Resource Representative
Gloria Melton
P.O. Box 34 Pit River
Round Mtn. , CA 96084 Madesi

This list is current only as of the date of this document.

Distribution of this list does not relieve any person of statutory responsibility as defined in Section 7050.5 of the Health and Safety Code, Section 5097.94 of the Public Resources Code and Section 5097.98 of the Public Resources Code.

This list is only applicable for contacting local Native Americans with regard to cultural resource assessment for the proposed Weed Line-1 Survey, Siskiyou County.

Native American Contacts
Siskiyou County
September 20, 2005

Madesi Band Cultural Resource Representative
Hudgee Gemmill
20181 Hudson St. 5th
Burney , CA 96013

Pit River
Madesi

Pit River Tribe of California
Michelle Berditschevsky, Environmental Coordinator
37118 Main Street
Burney , CA 96013
(530) 335-5062

Pit River
Achomawi - Atsugewi
Wintun

Madesi Band, Pit River Indians
Ben Lego
P.O. Box 278
Montgomery Ck. , CA 96065

Pit River
Madesi

Pit River Tribe Environmental Office
Sharon Elmore, Cultural Information Officer
37014 Main Street
Burney , CA 96013
ajumawi@frontier.net
(530) 335-5062, Ext. 2

Pit River

Pit River Tribe of California
Jessica Jim, Chairperson
37118 Main Street
Burney , CA 96013
(530) 335-5421
(530) 335-3140 Fax

Pit River
Achumawi - Atsugewi
Wintun

Pit River Tribe of California
Alexis Barry, Tribal Administrator
37118 Main Street
Burney , CA 96013
(530) 335-5421
(530) 335-3140 Fax

Pit River
Achomawi - Atsugewi
Wintun

This list is current only as of the date of this document.

Distribution of this list does not relieve any person of statutory responsibility as defined in Section 7050.5 of the Health and Safety Code, Section 5097.94 of the Public Resources Code and Section 5097.98 of the Public Resources Code.

This list is only applicable for contacting local Native Americans with regard to cultural resource assessment for the proposed Weed Line-1 Survey, Siskiyou County.

TRANSMISSION VERIFICATION REPORT

TIME : 09/07/2005 13:48
NAME : SWCA
FAX : 9165650757
TEL : 9165650356

DATE,TIME	09/07 13:48
FAX NO./NAME	6575390
DURATION	00:00:41
PAGE(S)	03
RESULT	OK
MODE	STANDARD ECM

SWCA®
ENVIRONMENTAL CONSULTANTS

Sacramento Office
4221 Northgate Blvd., Suite 7
Sacramento, CA 95834
Tel 916.565.0356
Fax 916.565.0757
www.swca.com

Fax Transmission Sheet

ATTENTION: Debbie Pilas-Treadway
NAHC

PHONE NUMBER: 916.653.4038

FAX NUMBER: 916.657.5390

SUBJECT : Data Request

FROM: R Hermann / SWCA

DATE : 9/7/05

NUMBER OF PAGES: 3

SWCA
ENVIRONMENTAL CONSULTANTS
Sound Science. Creative Solutions.

Sacramento Office
4221 Northgate Boulevard, Suite 7
Sacramento, CA 95834
Tel 916.565.0356 Fax 916.565.0757
www.swca.com

September 21, 2005

Ajumawi Band Cultural Resources Representative
Ms. Virginia Mercado
40538 McArthur Road
McArthur, CA 96028

Subject: Cultural Resource Survey between Weed and Montague in Siskiyou County, CA

Dear Ms. Mercado:

The purpose of this letter is to apprise you of a proposed cultural resource survey located in the Weed-Montague area. The project will consist of up-grading existing 69kV power lines to 115kV. The locations for the project have been subjected to an archaeological record search at the Northeast Information Center of the California Historical Resources Information System, located at California State University, Chico. Additionally, the California Native American Heritage Commission (NAHC) was contacted for a review of its Sacred Lands Files. A search of the sacred lands file indicated that there are no known sacred lands within or near the project area.

Your name was provided to us by the NAHC as an appropriate Native American contact for this area. Should you have any knowledge of specific cultural resources in the immediate project area or know of other contacts that may have such specific knowledge, or if you have other concerns in the project area, please contact Cindy Arrington, Project Manager, at (916) 565-0356, by facsimile at (916) 565-0757. If we receive no response from you by Tuesday October 5, 2005, we will assume that you do not wish to offer information related to the project.

Sincerely,

Cindy Arrington
Project manager

Enclosure: Map

NAME	Affiliation	Letter Sent	Date Responded	Concerns
Ajumawi Band Cultural Resources Representative Virginia Mercado 40538 McArthur Road McArthur, CA 96028	Pit River	21-Sep-05	Did not respond	None voiced
Ajumawi Band Cultural Resources Representative Uriel Chacon 36966 Oak St. Burney, CA 96013	Pit River	21-Sep-05	Did not respond	None voiced
Ajumawi Band Cultural Resources Representative Selena Vargas 36966 Oak St. Burney, CA 96013	Pit River	21-Sep-05	Did not respond	None voiced
Atwamsini Band, Pit River Indians Wally Preston P.O. Box 135 Alturas, CA 96101	Atwamsini Pit River	21-Sep-05	Did not respond	None voiced
Atwamsini Band, Pit River Indians Mary Preston P.O. Box 135 Alturas, CA 96101	Atwamsini Pit River	21-Sep-05	Did not respond	None voiced
Atwamsini Band, Pit River Indians Herb Quinn P.O. Box 513 McArthur, CA 96056	Atwamsini Pit River	21-Sep-05	Did not respond	None voiced

Illmawi Band, Pit River Indian Tribe Cecelia Silvas P.O. Box 48 Fall River Mills, Ca 96028	Pit River - Illmawi	21-Sep-05	Did not respond	None voiced
Illmawi Band, Pit River Indian Tribe Hishkama Wilson P.O. Box 462 Fall River Mills, Ca 96028	Pit River - Illmawi	21-Sep-05	Did not respond	None voiced
Madesi Band Cultral Resource Representative Carol Cantrell P.O. Box 203 Montgomery, CA 96065	Pit River Madesi	21-Sep-05	Did not respond	None voiced
Madesi Band Cultral Resource Representative Gloria Melton P.O. Box 34 Round Mtn., CA 96084	Pit River Madesi	21-Sep-05	Did not respond	None voiced
Madesi Band Cultural Resource Representative Hudgee Gemmill 20181 Hudson st. 5th Burney, Ca 96013	Pit River Madesi	21-Sep-05	Letter was returned by USPO on 9-29-05 as "Not Deliverable".	
Madesi Bnd, Pit River Indians Ben Lego P.O. Box 278 Montgomery Ck., CA 96065	Pit River Madesi	21-Sep-05	Did not respond	None voiced

Pit River Tribe Environmental Office Sharon Elmoe, Cultural Information Officer 37014 Main street Burney, CA 96013	Pit River	21-Sep-05	Did not respond	None voiced
Pit River Tribe of California Jessica Jim, Chairperson 37118 Main Street Burney, CA 96013	Pit River Achumawi - Atsugewi Wintun	21-Sep-05	Did not respond	None voiced
Pit River Tribe of California Alexis Barry, Tribal Administrator 37118 Main Street Burney, CA 96013	Pit River Achumawi - Atsugewi Wintun	21-Sep-05	Did not respond	None voiced
Pit River of California Michelle Berditschevsky, Environmental Coordinator 37118 Main Street Burney, CA 96013	Pit River Achumawi - Atsugewi Wintun	21-Sep-05	Did not respond	None voiced

APPENDIX H
LUCERNE SUBSTATION DRAWINGS

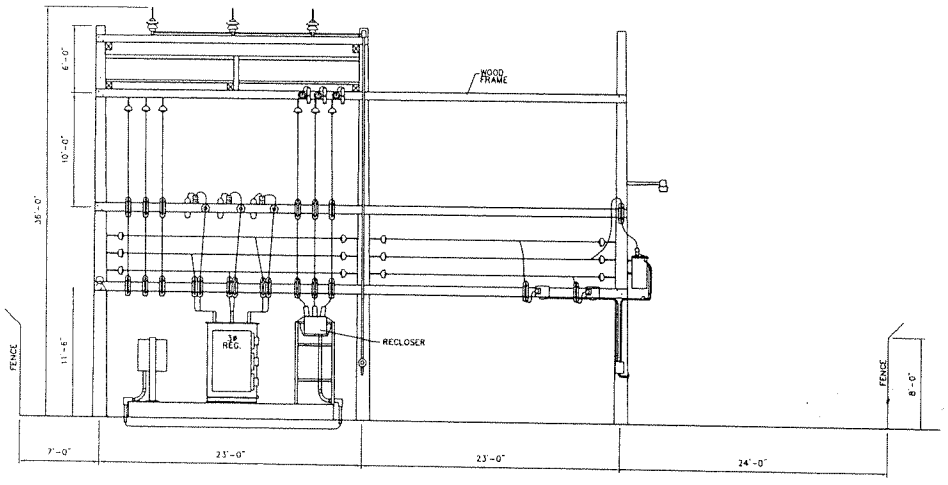

EXISTING ELEVATION (FRONT)
SCALE: 3/16"=1'-0"

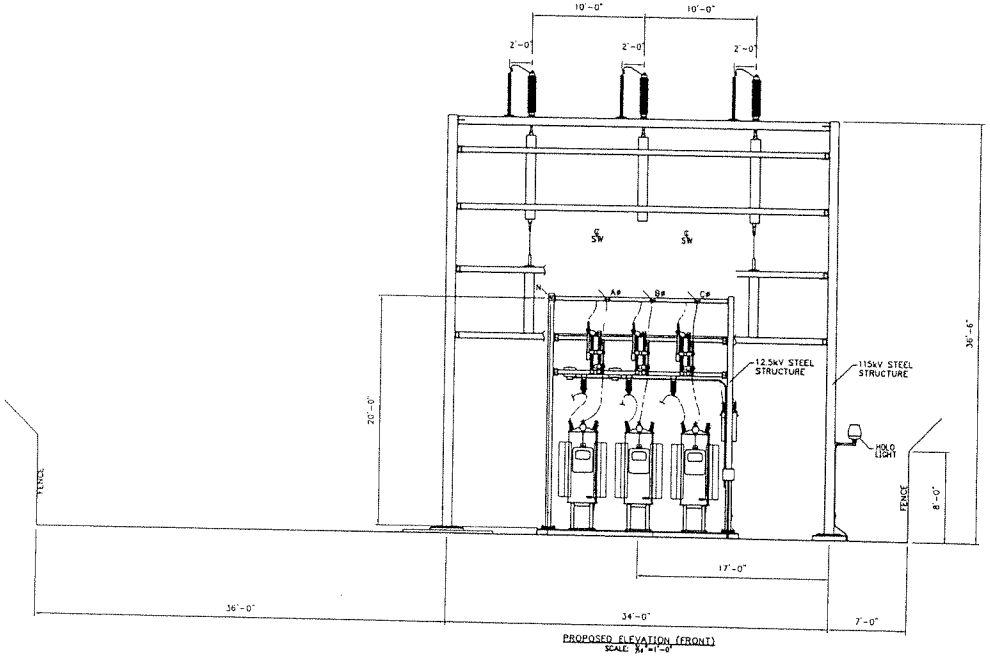

PROPOSED ELEVATION (FRONT)
SCALE: 3/16"=1'-0"

PROJ/ER# 11033811	LUCERNE SUBSTATION GRENADA, CALIFORNIA PLANS & ELEVATIONS
PL#	
DATE 10/31/2005	
ENG MLM DES	
DR DMW CH	
APPROVAL	
	PACIFICORP ELECTRICAL
SCALE: NONE	SHEET 6 PLANNING 06 REV. 0

PLOT SCALE: 1 = 1 CAD NO.: PLANNING 06 ATTCH'D XREF/RASTER: NONE

No.	DATE	REVISION	BY	CHK	APP	No.	DATE	REVISION	BY	CHK	APP	DRAWING No.	REFERENCE DRAWINGS	DRAWING No.	REFERENCE DRAWINGS

J:\Shared Data\Work In Progress\Substation\Lucerne\Planning\planning 06.dwg 11/3/2005 2:31:10 PM P00812, 1:1

BORDER REVISED 06.27.02 R.J.R.

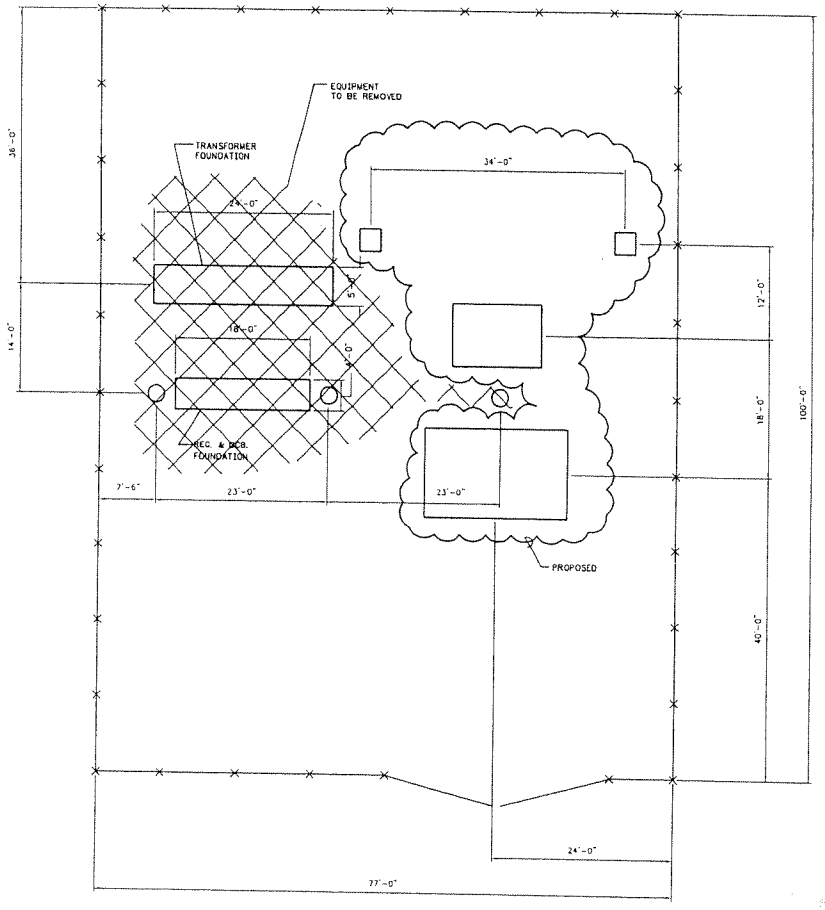

GENERAL PLAN
SCALE: 1/8"=1'-0"

PROJ/ER#	
PL#	
DATE 11/03/2005	
ENG MLM	DES
DR DMW	CH
APPROVAL	

LUCERNE SUBSTATION
GRENADA, CALIFORNIA
GENERAL PLAN

PACIFICORP ELECTRICAL

SCALE: NONE | SHEET 1 OF 1 | GENERAL PLAN 01 | REV. 0

PLOT SCALE: 1 = 1 CAD NO.: GENERAL PLAN ATTCH'D XREF/RASTER: 1/8"=1'-0"

No.	DATE	REVISION	BY	CHK	APP	No.	DATE	REVISION	BY	CHK	APP	DRAWING No.	REFERENCE DRAWINGS	DRAWING No.	REFERENCE DRAWINGS

BORDER REVISED 06.27.02 R.J.R.

J:\Shared Data\Work In Progress\Substation\Lucerne\Planning\GENERAL PLAN 01.dwg, 11/4/2005 1:12:56 PM, PS8912, 1:1

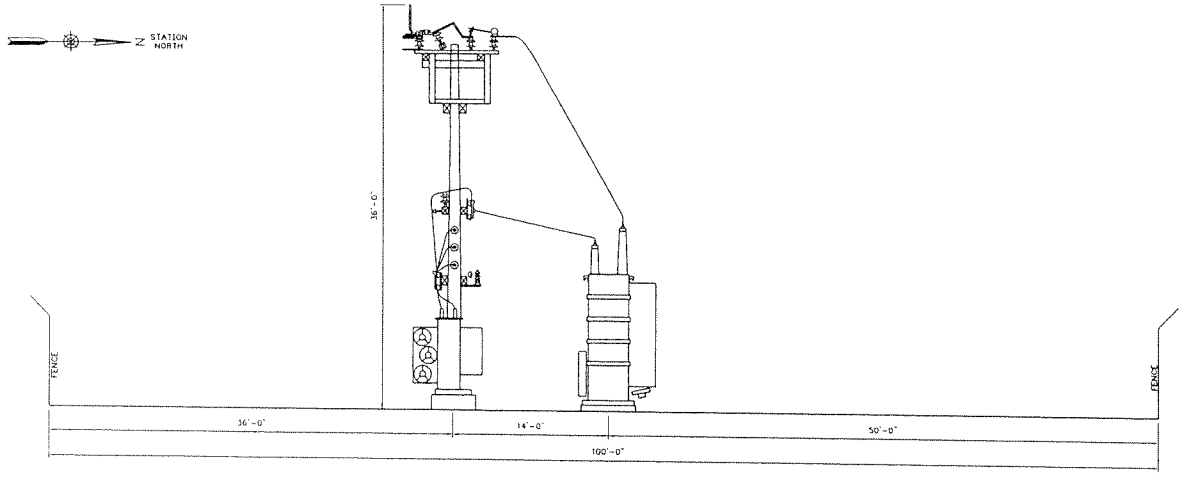

EXISTING ELEVATION (SIDE)
SCALE: 3/16"=1'-0"

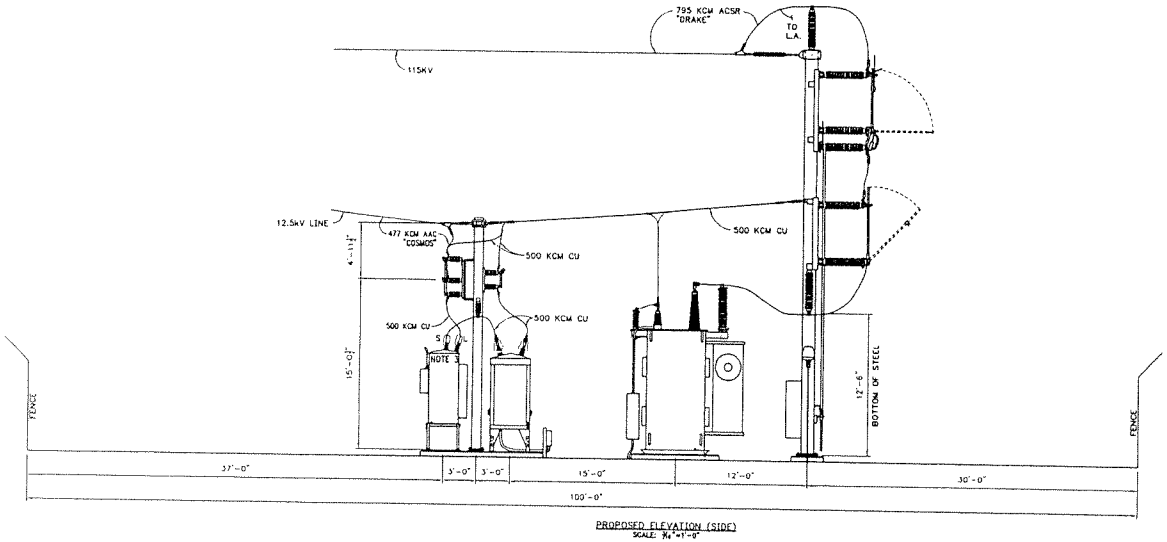

PROPOSED ELEVATION (SIDE)
SCALE: 3/16"=1'-0"

PROJ/ER# 11033811	LUCERNE SUBSTATION GRENADA, CALIFORNIA PLANS & ELEVATIONS
PL#	
DATE 09/20/05	
ENG STC/MVM	DES STC/CDI
DR STC/CDI	CH
APPROVAL	
PACIFICORP	ELECTRICAL
SCALE: AS SHOWN	SHEET 5
PLANNING 05	REV. 0

PLOT SCALE: 1 = 1 CAD NO: PLANNING 05 ATTACHED XREF/MASTER:NONE

No.	DATE	REVISION	BY	CHK	APP	No.	DATE	REVISION	BY	CHK	APP	DRAWING No.	REFERENCE DRAWINGS	DRAWING No.	REFERENCE DRAWINGS

BORDER REVISED 02.26.03 R.JR.

J:\Shared Data\Work In Progress\Substation\Lucerne\Planning\planning 05.dwg, 11/3/2005 2:31:34 PM, P98812, 1:2.04