T/Ladd/Tehachapi/Antelope/1104-241

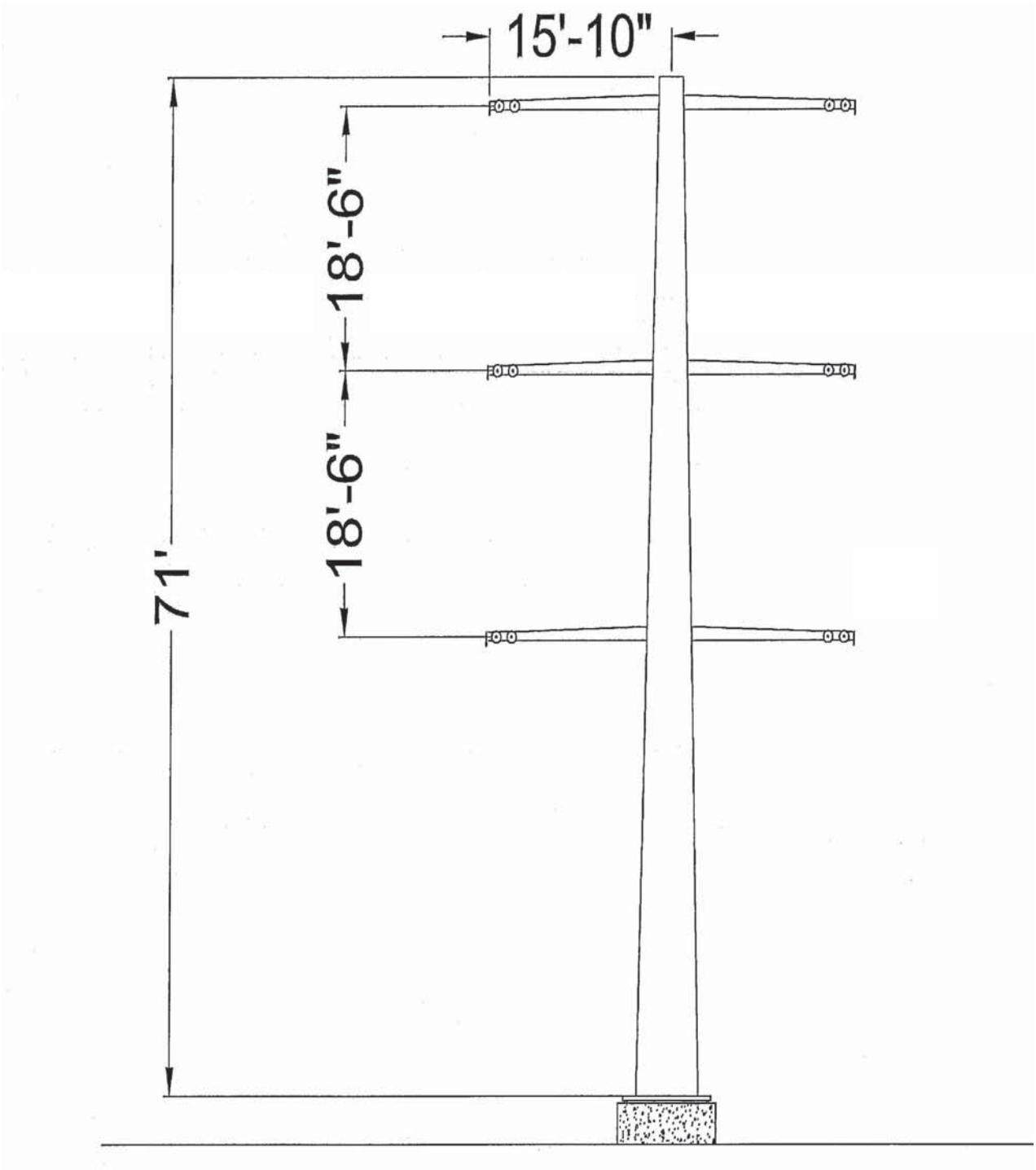

SOUTHERN CALIFORNIA EDISON An EDISON INTERNATIONAL® Company	Antelope Transmission Project PEA - Segment 1	Figure 3-7. TYPICAL 220 kV DOUBLE CIRCUIT TUBULAR POLE	2004