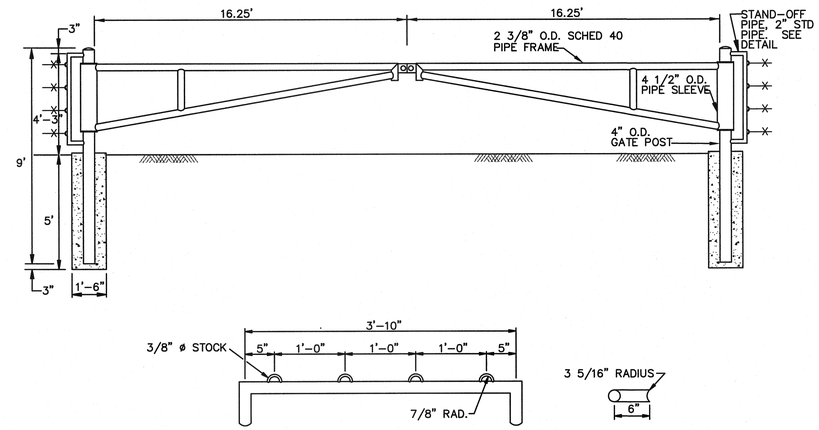

NOTES
1. LEFT AND RIGHT SIDE OF GATE ARE IDENTICAL.
2. FOOTINGS SHALL BE MINIMUM 3000 PSI CONCRETE

B — PIPE SWING GATE — NO SCALE

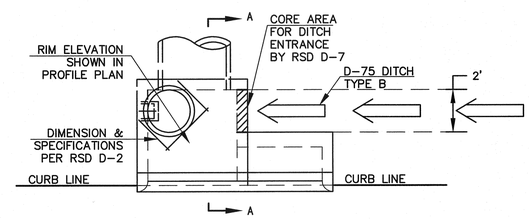

PLAN

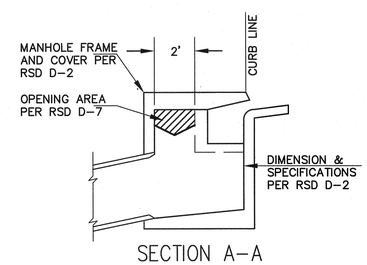

SECTION A-A

D — MODIFIED TYPE B-1 CI

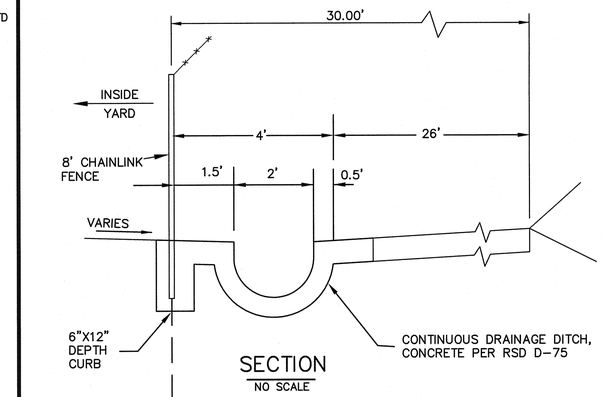

SECTION
NO SCALE

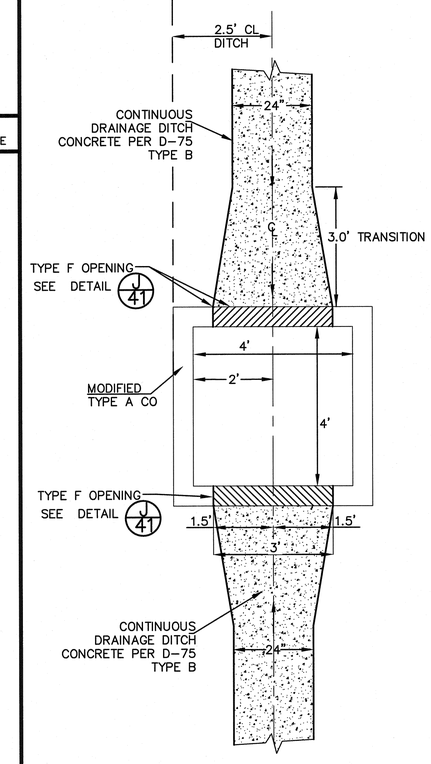

PLAN
NO SCALE

E — MOD. "A" C.O. WITH TYPE F OPENING — NO SCALE

REGISTERED PROFESSIONAL ENGINEER RICHARD W. WALKER No. C63344 Exp. 6-30-10 CIVIL STATE OF CALIFORNIA — 3/30/10

NOLTE BEYOND ENGINEERING

REVISIONS

NO.	WORK DONE	DATE:	BY:	APP'D:	NO.	WORK DONE	DATE:	BY:	APP'D:	NO.	WORK DONE	DATE:	BY:	APP'D:	NO.	WORK DONE	DATE:	BY:	APP'D:

SAN DIEGO GAS & ELECTRIC COMPANY
SAN DIEGO, CALIFORNIA

SUNCREST SUBSTATION
GRADING AND DRAINAGE DETAILS

DRAWN BY: MJ	DATE: 3/24/10	SCALE: AS SHOWN	W.O.: –	REV.: 0	SCR-C-043
CHECKED BY: RWM	DATE: –				
APPROVED BY: CR	DATE: –	SHEET 43 OF 66			
CAD NO.: GP43	PLOT SCALE: 1=1				

N:\SDB039600\CADD\USFS\CIVIL\GP\GP43
XREFS: