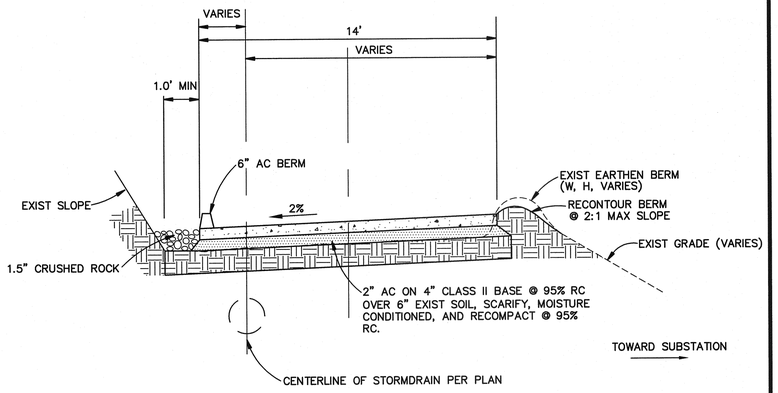

NOTE: HORIZONTAL AND VERTICAL ALIGNMENT OF 14' ROADWAY SHALL MEET CATCH BASINS AS SHOWN IN THESE PLANS; INTERVENING ALIGNMENTS SHALL GENERALLY FOLLOW EXISTING GROUND PROFILE AND A HORIZONTAL ALIGNMENT SUBSTANTIALLY CONFORMING TO THAT SHOWN ON SHEETS 14 AND 15.

(A) BELL BLUFF TRUCK TRAIL TYPICAL SECTION

NO SCALE

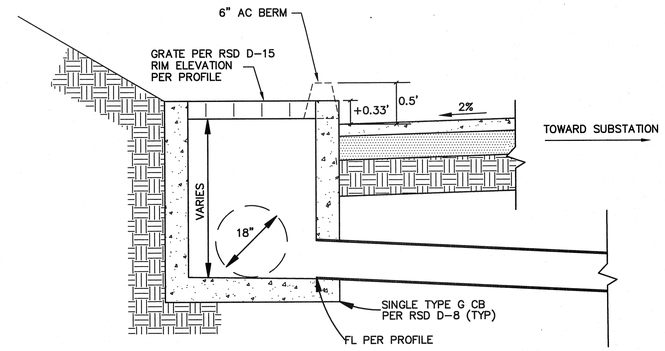

(B) DRAINAGE SECTION AT BELL BLUFF TRUCK TRAIL (TYP)

NO SCALE

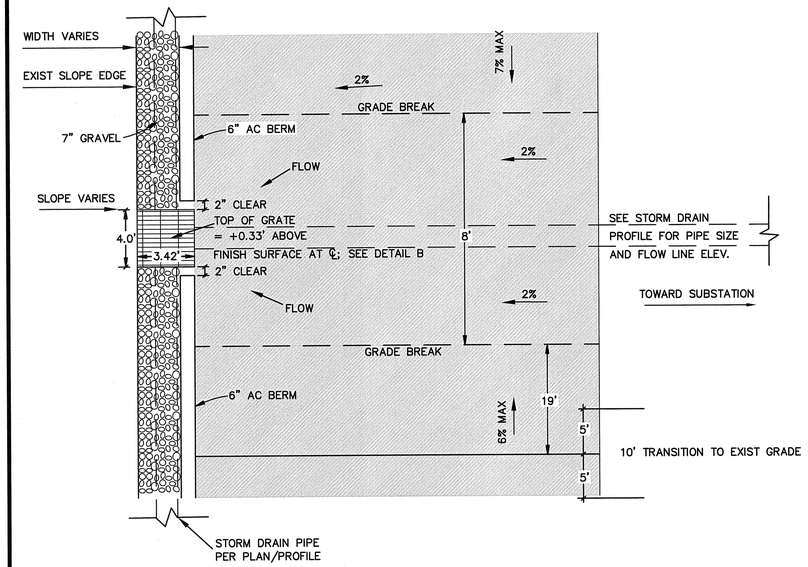

PLAN

(C) AREA DRAIN PLAN AT BELL BLUFF TRUCK TRAIL (TYP)

NO SCALE

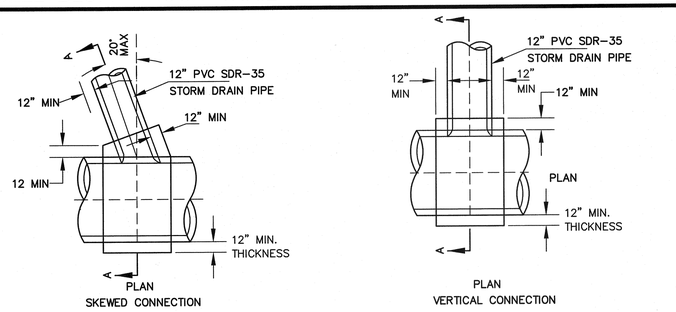

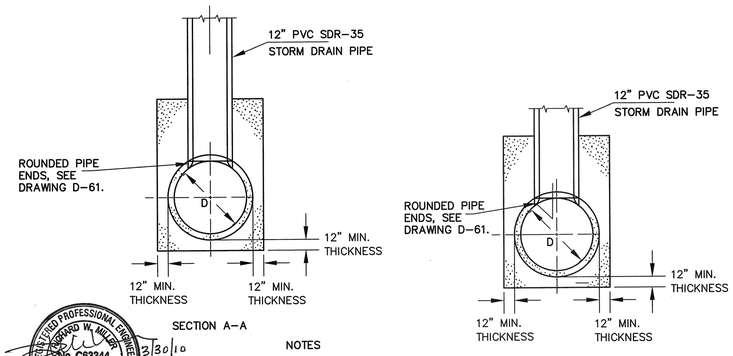

REGISTERED PROFESSIONAL ENGINEER RICHARD W. MILLER No. C83344 Exp. 6-30-10 CIVIL STATE OF CALIFORNIA

3/30/10

NOTES

1. THE END OF CONNECTING PIPE SHALL NOT PROJECT INTO THE WATERWAY OF THE LARGER PIPE.
2. THE LARGER PIPE SHALL NOT BE LESS THAN 24" ID.
3. THE SMALLER PIPE SHALL NOT BE MORE THAN 2/3 THE SIZE OF THE LARGER PIPE.
4. CONCRETE SHALL BE 470-C-2000.

NOLTE BEYOND ENGINEERING

(D) MODIFIED CONCRETE LUG

NO SCALE

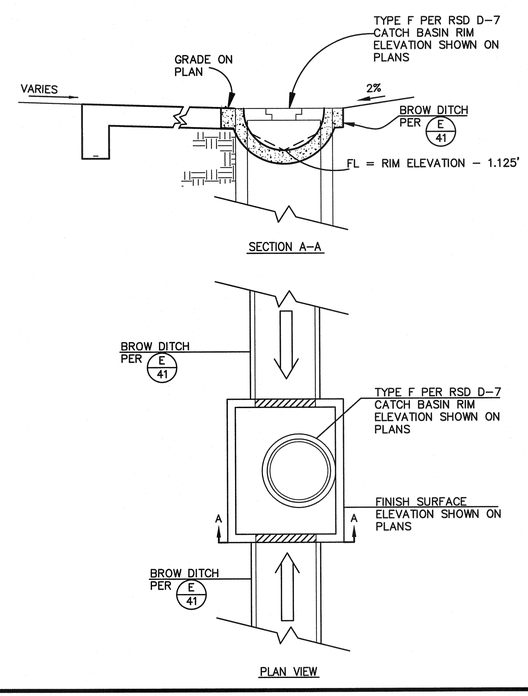

(E) DITCH TO CATCH BASIN FLOW

NO SCALE

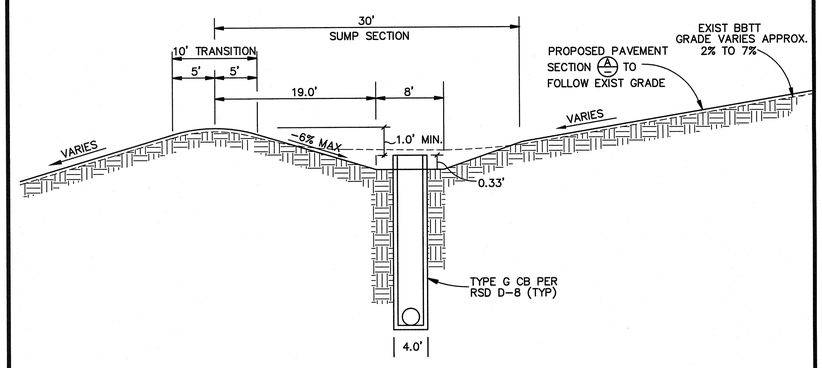

(C) LONG. SECTION AT BELL BLUFF TRUCK TRAIL (TYP)

NO SCALE

REVISIONS

NO.	WORK DONE	DATE:	BY:	APP'D:	NO.	WORK DONE	DATE:	BY:	APP'D:	NO.	WORK DONE	DATE:	BY:	APP'D:	NO.	WORK DONE	DATE:	BY:	APP'D:

SAN DIEGO GAS & ELECTRIC COMPANY
SAN DIEGO, CALIFORNIA

SUNCREST SUBSTATION

GRADING AND DRAINGE DETAILS

DRAWN BY:	MJ	DATE: 3/24/10	SCALE: AS SHOWN	W.O.:	–	REV.:	0
CHECKED BY:	RWM	DATE: –					
APPROVED BY:	CR	DATE: –	SHEET 45 OF 66				
CAD NO.:	GP45	PLOT SCALE: 1=1					

SCR-C-045

N:\SD803600\CADD\USFS\CIVIL\GP\GP45
XREFS: