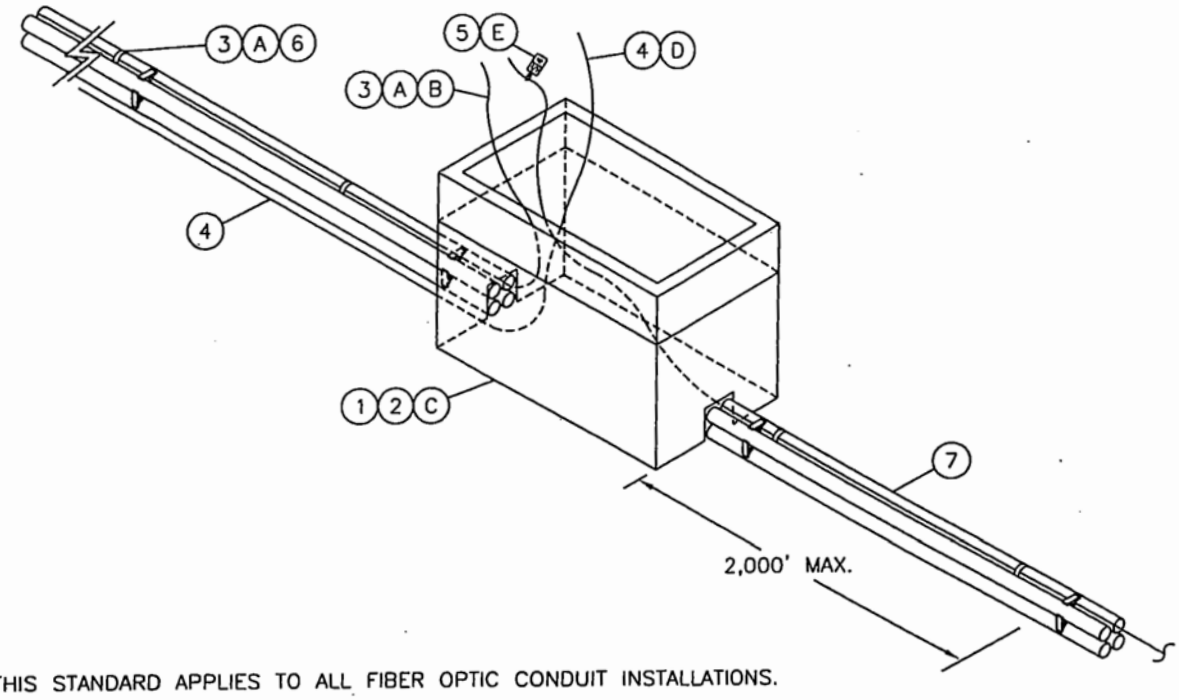

NOTE:

- THIS STANDARD APPLIES TO ALL FIBER OPTIC CONDUIT INSTALLATIONS.
- REFER TO THE SPECIFIC TRANSMISSION PROJECT FOR INSTRUCTIONS ON THE USE OF TRACER WIRE IN THE TRANSMISSION TRENCH.

ALLATION:

(A) YELLOW TRACER WIRE SHALL BE INSTALLED IN THE TRENCH ALONGSIDE CONDUIT WHICH IS DESIGNATED FOR FIBER OPTIC CABLE. THE WIRE SHALL BE TAPED TO THE CONDUIT 8 TO 10 FOOT INTERVALS.

(B) THE TRACER WIRE SHALL BE LOOPED INSIDE THE HANDHOLE WITH ENOUGH SLACK TO EXTEND 12" BEYOND THE TOP OF THE BOX. CUT THE TRACER WIRE, SEAL AND TAPE THE ENDS.

(C) LOCATE ACCESS POINTS (HANDHOLES) TO THE TRACER WIRE AT 2000' INTERVALS.

(D) EXTEND GROUND WIRE 12 INCHES BEYOND THE TOP OF BOX.

(E) ATTACH AN "S4" TAG TO ALL TRACER WIRE AT ACCESS POINTS.

Source: SDG&E,2014

Figure B.1-19: Typical Telecommunication Underground Handhole