Southern California Edison
WODUP A.13-10-020

DATA REQUEST SET A.13-10-020 WODUP ED-SCE-08

To: ENERGY DIVISION
Prepared by: Ayman Samaan, P.E.
Title: Power System Planner 4
Dated: 10/14/2014

Question PD-25 A:

SCE responded to Data Request PD-21, along with responses to ALT-8, ALT-9, and ALT-10 (included in Data Request 7; SCE responses received September 26, 2014). These responses raise additional questions on the potential growth-inducing impacts of the Proposed Project, potential indirect effects, and potential connected actions. SCE's responses suggest that the Proposed Project may be needed in order to serve certain upstream facilities and projects that depend on the Proposed Project for their operation. For each of the following, please explain on how the project or projects are dependent on the Proposed Project:

A. The generation projects identified in PEA Table 1.1 having executed Large Generation Interconnection Agreements (1,485 MW).

Response to Question PD-25 A:

Since the PEA was filed in October 2013, SCE and CAISO executed a new Large Generation Interconnection Agreement (LGIA) with Queue # 643AE for a 150 MW Solar PV project that is pending FERC acceptance and therefore the total executed LGIAs is 1,635 MW.

Generation projects with executed LGIAs do not depend on the WOD Upgrade Project because they could connect to the system as energy-only projects. However, allowing these generation projects to connect as energy only would result in significant curtailment of renewable resources due to the lack of transmission transfer capability. In addition, these generation projects would not qualify for Resource Adequacy (RA) which would have an adverse impact on the Load Serving Entities (LSE) compliance with RA procurement obligations.

As illustrated below, the WOD corridor is the critical path for generation projects located at Devers, Red Bluff and Colorado River substations. In addition, the WOD corridor would also support flow increases from Path 42 and Delaney substation (following the Delany-Colorado River Project). The existing WOD corridor is currently fully subscribed as evidenced by the lack of Deliverability Capacity available, and as such the existing WOD transmission lines substantially limit the ability to deliver electricity from these areas.

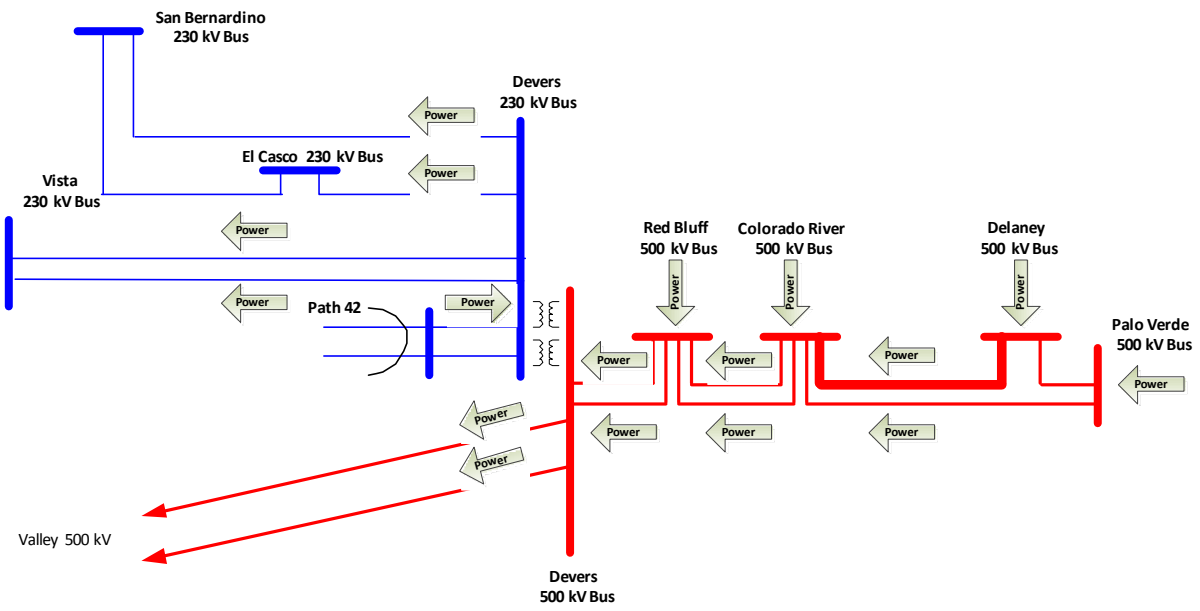

As a result, the CAISO Cluster Interconnection Studies demonstrate that the existing WOD transmission lines are inadequate to meet the level of service needed by new generation interconnection requests identified in Table 1.1 of the PEA and the Proposed Project is required to safely and reliably provide the Full Capacity Deliverability status.

Southern California Edison
WODUP A.13-10-020

DATA REQUEST SET A.13-10-020 WODUP ED-SCE-08

To: ENERGY DIVISION
Prepared by: Ayman Samaan, P.E.
Title: Power System Planner 4
Dated: 10/14/2014

Question PD-25 B:

SCE responded to Data Request PD-21, along with responses to ALT-8, ALT-9, and ALT-10 (included in Data Request 7; SCE responses received September 26, 2014). These responses raise additional questions on the potential growth-inducing impacts of the Proposed Project, potential indirect effects, and potential connected actions. SCE's responses suggest that the Proposed Project may be needed in order to serve certain upstream facilities and projects that depend on the Proposed Project for their operation. For each of the following, please explain on how the project or projects are dependent on the Proposed Project:

B. The generation projects identified in PEA Table 1.1 under negotiation and study for Large Generation Interconnection Agreements (994.5 MW).

Response to Question PD-25 B:

Generation projects identified in Table 1.1 of the PEA under negotiation and study for Large Generation Interconnection Agreements do not depend on the WOD Upgrade Project because they could connect to the system as energy only projects. However, energy only projects would not qualify for Resource Adequacy and would be subject to significant curtailment of renewable resources due to the lack of transmission transfer capability.

Southern California Edison
WODUP A.13-10-020

DATA REQUEST SET A.13-10-020 WODUP ED-SCE-08

To: ENERGY DIVISION
Prepared by: Ayman Samaan, P.E.
Title: Power System Planner 4
Dated: 10/14/2014

Question PD-25 C:

SCE responded to Data Request PD-21, along with responses to ALT-8, ALT-9, and ALT-10 (included in Data Request 7; SCE responses received September 26, 2014). These responses raise additional questions on the potential growth-inducing impacts of the Proposed Project, potential indirect effects, and potential connected actions. SCE's responses suggest that the Proposed Project may be needed in order to serve certain upstream facilities and projects that depend on the Proposed Project for their operation. For each of the following, please explain on how the project or projects are dependent on the Proposed Project:

C. The three additional renewable generation projects (total 500 MW), mentioned in response to Data Request ALT-10 as having filed requests for interconnection since the October 2013 filing of the Proposed Project PEA.

Response to Question PD-25 C:

The CAISO Cluster interconnection study for the three additional renewable generation projects identified that these projects could connect as energy only and therefore do not depend on the WOD Upgrade Project. However, these renewable generation projects still require the WOD Upgrade Project to achieve Full Deliverability Capacity Status in order to qualify for Resource Adequacy.

Southern California Edison
WODUP A.13-10-020

DATA REQUEST SET A.13-10-020 WODUP ED-SCE-08

To: ENERGY DIVISION
Prepared by: Ayman Samaan, P.E.
Title: Power System Planner 4
Dated: 10/14/2014

Question PD-25 D:

SCE responded to Data Request PD-21, along with responses to ALT-8, ALT-9, and ALT-10 (included in Data Request 7; SCE responses received September 26, 2014). These responses raise additional questions on the potential growth-inducing impacts of the Proposed Project, potential indirect effects, and potential connected actions. SCE's responses suggest that the Proposed Project may be needed in order to serve certain upstream facilities and projects that depend on the Proposed Project for their operation. For each of the following, please explain on how the project or projects are dependent on the Proposed Project:

D. The Path 42 Upgrades that are in process by SCE and the Imperial Irrigation District (IID) to increase the transfer from IID to approximately 1,500 MW, as mentioned in response to Data Request ALT-10.

Response to Question PD-25 D:

The Path 42 Upgrade Project does not require nor depend on the WOD Upgrade Project. The Path 42 Upgrade Project is already under construction and is planned to be in-service by the end of 2014. The Path 42 Upgrade Project is needed to reduce the congestion on the existing Path 42 corridor and to increase the Imperial Irrigation District's (IID) import and export capability by 47 percent.

The WOD Upgrade Project was identified by CAISO deliverability studies to increase the Maximum Import Capability (MIC) out of IID area utilizing the capacity provided by the WOD Upgrade Project to allow additional power to flow west of Devers Substation.

The MIC quantity is determined by the CAISO for each intertie to identify the deliverable MW to the CAISO balancing authority based on CAISO deliverability studies criteria. The MIC capability of an intertie specifies the amount of the Resource Adequacy capacity in MW that the Load Serving Entities (LSE) can procure to meet their Resource Adequacy requirements.

Southern California Edison
WODUP A.13-10-020

DATA REQUEST SET A.13-10-020 WODUP ED-SCE-08

To: ENERGY DIVISION
Prepared by: Ayman Samaan, P.E.
Title: Power System Planner 4
Dated: 10/14/2014

Question PD-25 E:

SCE responded to Data Request PD-21, along with responses to ALT-8, ALT-9, and ALT-10 (included in Data Request 7; SCE responses received September 26, 2014). These responses raise additional questions on the potential growth-inducing impacts of the Proposed Project, potential indirect effects, and potential connected actions. SCE's responses suggest that the Proposed Project may be needed in order to serve certain upstream facilities and projects that depend on the Proposed Project for their operation. For each of the following, please explain on how the project or projects are dependent on the Proposed Project:

E. The planned 500 kV line from Delaney substation in Arizona to SCE's Colorado River substation.

Response to Question PD-25 E:

With regard to the proposed Delaney-Colorado River Project, the economic benefits and the deliverability increase to the Imperial Valley area identified by CAISO included the assumption that the WOD Upgrade Project would be in-service. This assumption results in the utilization of the additional capacity provided by the WOD Upgrade Project. No analysis has been performed by the CAISO to identify the economic benefits, if any, associated with the proposed Delaney – Colorado River Project under the assumption that the WOD Upgrade Project is not approved by the CPUC and thus not placed in service. As a consequence, it is not known if the approval of the Delaney – Colorado River Project depends on the WOD Upgrade project or not. However, the WOD Upgrade Project does not depend on the Delaney – Colorado River Project as the need for the WOD Upgrade Project was identified well before the Delaney – Colorado River Project was ever proposed. In fact, SCE previously proposed the Delaney – Colorado River Project as an element of the original DPV2 Project and was able to cancel it as it was not required to support any other project, including the WOD Upgrade Project.

Southern California Edison
WODUP A.13-10-020

DATA REQUEST SET A.13-10-020 WODUP ED-SCE-08

To: ENERGY DIVISION
Prepared by: Ayman Samaan, P.E.
Title: Power System Planner 4
Dated: 10/14/2014

Question PD-26 A:

SCE's response to Data Request ALT-11 (received September 26, 2014) identified a previously undisclosed aspect of the Proposed Project related to the potential need to take generation offline. This aspect may have direct or indirect environmental impacts meriting discussion in the EIR/EIS. The response indicates that the Proposed Project may achieve 4,800 MW of continuous flow after tripping offline 1,400 MW of generation, under the loss of the proposed Devers-Vista No. 1 and 2 220 kV transmission lines (an N-2 contingency).

A. Please quantify the level of generation tripping (MW) that would be occur with the existing system configuration under comparable existing N-2 contingencies, including the loss of Devers-Valley No. 1 and 2 500 kV transmission lines.

Response to Question PD-26 A:

All Special Protections Systems (SPS) are designed consistent with CAISO guidelines. These guidelines limit generation tripping to 1,400 MW under N-2 contingency and 1,150 MW for N-1 contingency. In the case of the existing Devers SPS, the studies identified conditions where 1,400 MW of tripping is required. In fact, most of these 1,400 MW of tripping would be renewable generation projects.

Southern California Edison
WODUP A.13-10-020

DATA REQUEST SET A.13-10-020 WODUP ED-SCE-08

To: ENERGY DIVISION
Prepared by: Ayman Samaan, P.E.
Title: Power System Planner 4
Dated: 10/14/2014

Question PD-26 B:

SCE's response to Data Request ALT-11 (received September 26, 2014) identified a previously undisclosed aspect of the Proposed Project related to the potential need to take generation offline. This aspect may have direct or indirect environmental impacts meriting discussion in the EIR/EIS. The response indicates that the Proposed Project may achieve 4,800 MW of continuous flow after tripping offline 1,400 MW of generation, under the loss of the proposed Devers-Vista No. 1 and 2 220 kV transmission lines (an N-2 contingency).

B. Please describe the nature of the generation tripping that could occur by describing what resource (fossil fuel or renewable) and geographically where generators would be curtailed.

Response to Question PD-26 B:

The existing Devers Special Protection System (SPS) is designed to trip generation in the Devers vicinity, which includes both gas-fired and renewable generation. The definition of curtailment (ramp down generation output) is generally understood to be market driven rather than a forced generation outage triggered by the utilization of an SPS.

Southern California Edison
WODUP A.13-10-020

DATA REQUEST SET A.13-10-020 WODUP ED-SCE-08

To: ENERGY DIVISION
Prepared by: Ayman Samaan, P.E.
Title: Power System Planner 4
Dated: 10/14/2014

Question PD-26 C:

SCE's response to Data Request ALT-11 (received September 26, 2014) identified a previously undisclosed aspect of the Proposed Project related to the potential need to take generation offline. This aspect may have direct or indirect environmental impacts meriting discussion in the EIR/EIS. The response indicates that the Proposed Project may achieve 4,800 MW of continuous flow after tripping offline 1,400 MW of generation, under the loss of the proposed Devers-Vista No. 1 and 2 220 kV transmission lines (an N-2 contingency).

C. Please describe the resource (fossil fuel or renewable) and geographical location of the replacement generation that would need to incrementally run at a higher capacity to replace the 1,400 MW tripped offline.

Response to Question PD-26 C:

SCE's understanding is that spinning reserve resources are used to supplement the need for additional resources due to a multitude of system conditions, including operation of Special Protection Systems (SPS). SCE doesn't know the type of resources that makeup the available spinning reserve or the location of these resources at any given day. The CAISO market protocol dictates which generation resources are dispatched or utilized as spinning reserve, which supplements the loss of generation as a result of an SPS operation. It is important to note that all of these spinning reserve resources have been previously permitted and built. SCE also notes that CAISO stage alerts have been previously utilized as a means of increasing the total spinning reserve percent availability.

Southern California Edison
WODUP A.13-10-020

DATA REQUEST SET A.13-10-020 WODUP ED-SCE-08

To: ENERGY DIVISION
Prepared by: Ayman Samaan, P.E.
Title: Power System Planner 4
Dated: 10/14/2014

Question PD-26 D:

SCE's response to Data Request ALT-11 (received September 26, 2014) identified a previously undisclosed aspect of the Proposed Project related to the potential need to take generation offline. This aspect may have direct or indirect environmental impacts meriting discussion in the EIR/EIS. The response indicates that the Proposed Project may achieve 4,800 MW of continuous flow after tripping offline 1,400 MW of generation, under the loss of the proposed Devers-Vista No. 1 and 2 220 kV transmission lines (an N-2 contingency).

D. Please describe what level of generation would need to be tripped with the Proposed Project completed and in service but under other N-2 contingencies, including the loss of Devers-Valley No. 1 and 2 500 kV transmission lines.

Response to Question PD-26 D:

If the system requires the need for new Special Protection Systems (SPS) after the completion of the WOD Upgrade Project, that new SPS would be designed consistent with CAISO guidelines (1,400 MW under N-2 contingency and 1,150 MW for N-1 contingency) and would most likely trip the same generation projects currently participating in the existing Devers SPS.

Southern California Edison
WODUP A.13-10-020

DATA REQUEST SET A.13-10-020 WODUP ED-SCE-08

To: ENERGY DIVISION
Prepared by: Ayman Samaan, P.E.
Title: Power System Planner 4
Dated: 10/14/2014

Question PD-26 E:

SCE's response to Data Request ALT-11 (received September 26, 2014) identified a previously undisclosed aspect of the Proposed Project related to the potential need to take generation offline. This aspect may have direct or indirect environmental impacts meriting discussion in the EIR/EIS. The response indicates that the Proposed Project may achieve 4,800 MW of continuous flow after tripping offline 1,400 MW of generation, under the loss of the proposed Devers-Vista No. 1 and 2 220 kV transmission lines (an N-2 contingency).

E. Please describe the environmental effects of project-related generation tripping and incrementally running replacement generation.

Response to Question PD-26 E:

Any generation re-dispatch that is necessary due to any SPS generation tripping will be determined at the direction of the CAISO. SCE does not know, and has no way of knowing, which resources the CAISO will dispatch, as the CAISO's determination will depend on many factors that can only be determined at the time of the dispatch such as location of the load and system operating conditions. In fact, CAISO can utilize both internal and external (through Interties) resources to make up for the generation losses. Additional generation resources are not needed specifically to provide replacement generation due to SPS generation tripping from the WOD Project. As such, the environmental impact of operating any generation resources that the CAISO dispatches would have already been assessed when such generation resources were originally permitted.

Southern California Edison
WODUP A.13-10-020

DATA REQUEST SET A.13-10-020 WODUP ED-SCE-08

To: ENERGY DIVISION
Prepared by: Brent Scharnberg
Title: Real Properties Project Manager
Dated: 10/14/2014

Question REC-4:

Easements. Data Request REC-1 asked for copies of use agreements for all recreational facilities located in the project ROW. In a conference call on August 21, 2014, SCE agreed to provide sample easements for review and consideration in response to this data request; SCE provided two sample easements in Data Response REC-1 on September 15, 2014. However, the two sample easements SCE provided were for easements crossing private lands that are not currently used for recreation.
Please provide a sample easement for publicly-owned lands that are currently used for recreation. For example, an acceptable sample easement would be for a parcel where the following parks or open spaces are located: Nobel Creek Regional Park, Stetson Community Park, Oak Valley Park, or the City of Beaumont parcel between N. Deodar Drive and S. Monte Verde Drive.

Response to Question REC-4:

The two easement documents that were previously provided in response to Data Request Set # 4, Question No. REC-1 are from 1945 and they run with the land in perpetuity. As such, these two easements cover SCE's land rights for the portion of its lines that run through the Noble Creek Park and the Stetson Community Park. Because the existing WOD transmission lines have been in place since the 1940s, the vast majority of the easements through the WOD corridor are similar to the ones previously provided. SCE was able to find a consent agreement with the BLM for the common use of land related to the Pacific Crest Trail. Similar to the easements previously provided, SCE originally acquired the land rights (now related to the Pacific Crest Trail) via easements in 1945 and 1958. The Pacific Crest Trail was later granted in 1985 and as such the BLM issued a consent to use the common land acknowledging SCE's rights in these 1945 and 1958 easements. In addition, with this consent agreement, SCE acknowledges the Pacific Crest Trail easement and the BLM's right to use the land for trail purposes. Both SCE and the BLM have the right to use the land and neither party can exclude the other. The intent of the consent agreement is to work cooperatively with one another and the agreement documents this. A copy of the BLM consent agreement for the Pacific Crest Trail and the two SCE easements are attached for your reference.

0 5 7 1

FRAME NO.

CONTROL NO. 26505 DATE 9/18/92 ROLL NO. 92 T006

THE POOR QUALITY OF THE ATTACHED ORIGINAL DOCUMENT HAS ADVERSELY AFFECTED REPRODUCTION. THIS IS THE MOST LEGIBLE IMAGE CONTAINABLE.

278463

Recording Requested By:
When recorded, return to:
Dave Beine - (ATROW C-940.4)
c/o Bureau of Land Management
2800 Cottage Way
Sacramento, CA 95825
Reference: TE-RIV-114 (SCE)
A/P No. 517-180-004, 005, 006
Transfer Tax Exempt
R&T Code: 11922

RECEIVED FOR RECORD AT 8:30 O'CLOCK A.M.

SEP 27 1988

Recorded in Official Records of Riverside County, California

Recorder

SACRAMENTO, CALIFORNIA

RECEIVED BUREAU OF LAND MGMT. 88 SEP 19 AM 10:3

UNITED STATES
DEPARTMENT OF THE INTERIOR
BUREAU OF LAND MANAGEMENT

CONSENT TO COMMON USE

WHEREAS, Seymour Lazar and A.J. Lazar, his wife, have granted a Trail Easement for the Pacific Crest National Scenic Trail (PCNST) (TE-RIV-114) to the United States of America and its assigns, by deed dated June 19, 1985, recorded June 26, 1985, as Instrument No. 85-139346, records of Riverside County, California, which traverses the following described lands in Riverside County, California:

Township 3 South, Range 3 East, SBM

The Northwest quarter of Section 8, according to the official plat thereof.

Except that portion thereof lying within West Palm Springs Village No. 2 as per map recorded in Book 35 Pages 79 and 80 of Maps, in the Office of the County Recorder of said County.

Also except that portion thereof lying within San Gorgonio Pass No. 4, as shown by map on file in Book 34 Pages 1 and 2 of Maps, in the Office of the County Recorder of said County.

Also except that portion thereof lying within West Palm Springs Village No. 1, as per map recorded in Book 35 Pages 50 through 52 of Maps, in the Office of the County Recorder of said County.

Reference being made to above recorded document for a specific description of said trail easement for the Pacific Crest National Scenic Trail (PCNST).

WHEREAS, the following grants were made for powerlines and incidental purposes to the Southern California Edison Company, a Corporation:

FRAME NO.
CONTROL NO. 26505 DATE 9/18/92 ROLL NO. 92 T006

THE POOR QUALITY OF THE ATTACHED ORIGINAL DOCUMENT HAS ADVERSELY AFFECTED REPRODUCTION. THIS IS THE MOST LEGIBLE IMAGE OBTAINABLE.

278463

Official Records of
Riverside County

	Date Recorded	Book	Page	
1.	4/02/1931	21	2 (patents)	Coachella Vlly Ice & Elec. Co.(CEP)
2.	8/24/1945	698	225 (O.R.)	Southern CA. Edison Co. SCE Doc 83485
3.	4/08/1958	2251	47 (O.R.)	California Electric Power Co. (CEP) (S.C.E.--Successor in Interest) SCE Doc 24164

The above easements traverse in part the same lands over which the Pacific Crest Trail easement to the United States of America was conveyed on June 26, 1985, as Instrument No. 85-139346.

NOW THEREFORE, in consideration of $1.00 and other good and valuable consideration, receipt of which is duly acknowledged, Southern California Edison Company, a Corporation, hereinafter referred to as Company, does hereby consent to the construction, reconstruction, maintenance, and use by the United States of America, and its assigns, hereinafter referred to as Government, of a trail over, along, and upon Company's easement in the Area of Common Use upon and subject to the following terms and conditions:

1. The Company and the Government shall have the right to use their respective easements in the conduct of their business and such uses shall be exercised in conjunction with the use of the other and neither party shall have exclusive use of said Areas of Common Use.

2. Government acknowledges Company's title to Company's easement in said Area of Common Use and the priority of Company's title over the title of Government therein. Government agrees never to assail or resist Company's title to Company's easement in the Area of Common Use or interest therein, and agrees never to claim that Company's easement in such Area of Common Use has been dedicated to public use, except that the above shall in no way restrict the right of the Government to exercise its power of eminent domain.

3. This agreement is subject to all the provisions of General Order No. 69-C of the Public Utilities Commission of the State of California, and to all other applicable provisions of the laws and regulations of the State of California and other governmental agencies.

4. Company does not by this consent waive any rights it may have at law to recover for any damage to its facilities resulting from the Government's use of said right-of-way.

5. Company shall have full unobstructed access to its facilities at all times.

6. Government agrees that it will not place or store any flammable materials within the boundaries of the Area of Common Use and will not permit others within its control to do so.

0 5 7 3

FRAME NO.

CONTROL NO.	DATE	ROLL NO.
26505	9/18/92	92 T006

THE POOR QUALITY OF THE ATTACHED ORIGINAL DOCUMENT HAS ADVERSELY AFFECTED REPRODUCTION. THIS IS THE MOST LEGIBLE IMAGE OBTAINABLE.

2778463

7. Government agrees that all equipment working on the right-of-way and the trail will maintain a minimum clearance of 25 feet from all structures.

IN WITNESS WHEREOF, this corporation has caused this agreement to be executed by its duly authorized officers on this 13 day of September, 1988.

Accepted By:

SOUTHERN CALIFORNIA EDISON COMPANY,
A Corporation

Ed Hastey
(Signature of Authorized BLM Officer)
Ed Hastey
State Director
Bureau of Land Management, California

By: R. W. Bray
R. W. BRAY

(Title)

Manager of
Real Properties and
Administrative Services

2778463

STATE OF CALIFORNIA
COUNTY OF Los Angeles } SS.

On September 13, 1988, before me, a Notary Public in and for said State, personally appeared R.W. BRAY, personally known to me (~~or proved to me on the basis of satisfactory evidence~~) to be Manager of Real Properties and Administrative Services of the Southern California Edison Company, the corporation that executed the within instrument, and personally known to me (~~or proved to me on the basis of satisfactory evidence~~) to be the person who executed the within instrument on behalf of the said corporation, and acknowledged to me that such corporation executed the same pursuant to its by-laws or a resolution of its board of directors.

WITNESS my hand and official seal.

Lily D. Plunkett

OFFICIAL SEAL
LILY D. PLUNKETT
Notary Public - California
PRINCIPAL OFFICE IN
LOS ANGELES COUNTY
MY COMMISSION EXPIRES JUNE 5, 1989

0574

FRAME NO.

CONTROL NO.	DATE	ROLL NO.
26505	9/18/92	92 T006

THE POOR QUALITY OF THE ATTACHED ORIGINAL DOCUMENT HAS ADVERSELY AFFECTED REPRODUCTION. THIS IS THE MOST LEGIBLE IMAGE OBTAINABLE.

139346

Recording Requested By:

When recorded, return to:
Dave Beine - (ATROW C-940.4)
c/o Bureau of Land Management
2800 Cottage Way
Sacramento, CA 95825
Reference: TE-RIV-106
A/P No. 517-180-004, 005, 006

RECEIVED FOR RECORD
Min. Past 10 o'clock AM

JUN 26 1985
Recorded in Official Records of Riverside County, California
William E. Gravely
RECORDER
Fee

Transfer Tax Exempt
R&T Code: 11922

UNITED STATES
DEPARTMENT OF THE INTERIOR
BUREAU OF LAND MANAGEMENT

DONATION
TRAIL EASEMENT DEED

KNOW ALL MEN BY THESE PRESENTS, that

SEYMOUR LAZAR, and A.J.LAZAR, his wife

hereinafter called Grantor, whether one or more, does hereby donate as a gift to the UNITED STATES OF AMERICA, and its assigns, a perpetual easement to locate, construct, use, maintain, improve and repair a trail over and across the following described real property situated in the County of Riverside, State of California, to wit:

The Northwest quarter of Section 8, Township 3 South, Range 3 East, San Bernardino Meridian, according to the official plat thereof.

Except that portion thereof lying within West Palm Springs Village No. 2 as per map recorded in Book 35 Pages 79 and 80 of Maps, in the Office of the County Recorder of said County.

Also except that portion thereof lying within San Gorgonio Pass No. 4, as shown by map on file in Book 34 Pages 1 and 2 of Maps, in the Office of the County Recorder of said County.

Also except that portion thereof lying within West Palm Springs Village No. 1, as per map recorded in Book 35 Pages 50 through 52 of Maps, in the Office of the County Recorder of said County.

The said easement hereby granted is for the Pacific Crest National Scenic Trail (PCNST) as it shall be located and constructed over and across the above described premises according to the following description:

All that portion of the Northwest Quarter of Section 8, Township 3 South, Range 3 East, San Bernardino Base and Meridian, contained within a strip of land thirty (30) feet in width, being fifteen (15) feet on each side of the centerline as shown and described in Exhibit "A" for TE-RIV-106, dated October 1984, and revised December 26, 1984, attached hereto and made a part hereof, with such additional width as required to accommodate construction and maintenance of cuts and fills.

Correct as to consideration, description, and conditions.
[signature] 6-18-85

0575

FRAME NO.

CONTROL NO.	DATE	ROLL NO.
26505	9/18/92	92 T006

THE POOR QUALITY OF THE ATTACHED ORIGINAL DOCUMENT HAS ADVERSELY AFFECTED REPRODUCTION. THIS IS THE MOST LEGIBLE IMAGE OBTAINABLE.

139346

The intent of this easement deed is to convey a trail easement for the Pacific Crest National Scenic Trail (PCNST) as it shall be constructed over and across the above described land now owned by Grantor, as would be disclosed by a proper survey of Grantor's aforesaid property, and to exclude any portion of said easement not actually within Grantor's property.

The parcel of land to which the above description applies contains 1.95 acres, more or less.

The UNITED STATES OF AMERICA shall have, from time to time, in the exercise of the rights herein granted, the right to scatter and waste vegetative and other materials in accordance with good construction and maintenance practices.

If said trail is located substantially as described herein, the centerline as constructed is hereby deemed accepted by Grantor and Grantee as the true centerline of the easement herein granted. If any subsequent survey of said easement shows that any portion of said easement, although located substantially as described herein, crosses lands of the Grantor not described herein, the easement shall be amended to include the additional lands traversed. TO HAVE AND TO HOLD said easement unto the UNITED STATES OF AMERICA and its assigns forever.

There is also hereby granted to the UNITED STATES OF AMERICA, its assigns, licensees and permittees, for a period not to exceed five (5) years, a temporary easement one hundred (100) feet in width, being fifty (50) feet on each side of the above described centerline, for use, as may be deemed necessary, for the construction of said trail over and across the herein described lands.

The easement herein granted is for the full, free and quiet use and enjoyment of the Pacific Crest National Scenic Trail over the above described property by the UNITED STATES OF AMERICA, its licensees and permittees including the right of access for the people of the UNITED STATES generally.

GRANTOR, his heirs, successors and assigns, reserve the right to cross and recross said easement at any point, and for any purpose, provided that such use shall not interfere with the rights and privileges granted herein. The grant of easement herein made is subject to the effect of reservations and leases, if any, of oil, gas, and minerals in and under said land, easements and rights-of-way of record.

GRANTOR covenants and warrants that he is lawfully seized and possessed of the land and has the full right, power and authority to execute this conveyance, and that said land is free and clear of liens, claims or encumbrances, except as shown above, and that he will defend the title to the easement conveyed herein and quiet enjoyment thereof against the lawful claims and demand of all persons.

0 5 0 6

FRAME NO.

CONTROL NO.	DATE	ROLL NO.
26505	9/18/92	92 T006

THE POOR QUALITY OF THE ATTACHED ORIGINAL DOCUMENT HAS ADVERSELY AFFECTED REPRODUCTION. THIS IS THE MOST LEGIBLE IMAGE OBTAINABLE.

139346

Accepted subject to approval of title by the Department of Justice:

Dated this 19TH day of June 1985

Accepted By:

(Signature of Authorized Officer)

GERALD E. HILLIER
District Manager, CDD
(Title)

Seymour Lazar

Insert or attach a proper Notary Acknowledgment here; (individual, corporation, trustee, etc.)

STATE OF CALIFORNIA
COUNTY OF RIVERSIDE } SS

OFFICIAL SEAL
JUDITH A STEWART
NOTARY PUBLIC · CALIFORNIA
RIVERSIDE COUNTY
My comm. expires APR 30, 1984

ON JUNE 19 1985, before me, the undersigned, a Notary Public in and for said County and State, personally appeared SEYMOUR LAZAR AND A.J. LAZAR

proved to me on the basis of satisfactory evidence to be the person(S) whose name ARE subscribed to this instrument, and acknowledged to me that they executed it.

Notary's Signature Judith A. Stewart

SEAL ACKNOWLEDGMENT
No. 16 Rev. 1-82

139346

0577

FRAME NO.

CONTROL NO.	DATE	ROLL NO.
26505	9/18/92	92 T006

THE POOR QUALITY OF THE ATTACHED ORIGINAL DOCUMENT HAS ADVERSELY AFFECTED

139346

EXHIBIT "A"

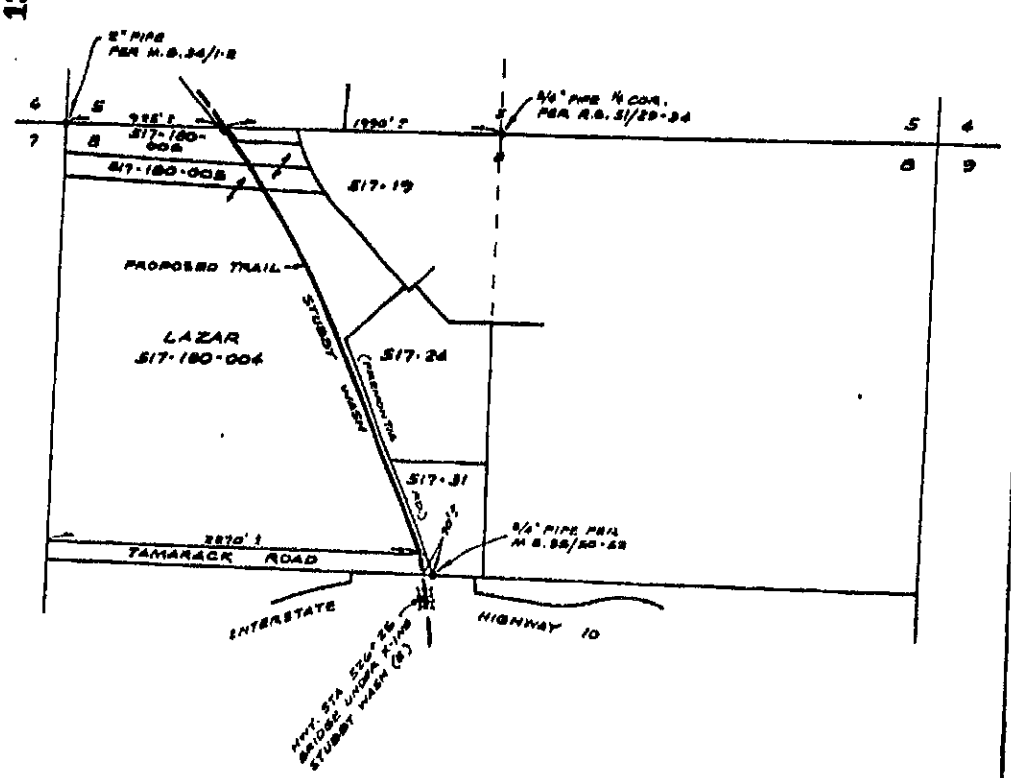

LENGTH 2830 FT.
0.54 MI.
AREA : 1.95 AC

FEET
0 1000 2000

UNITED STATES
DEPARTMENT OF THE INTERIOR
BUREAU OF LAND MANAGEMENT

RIVERSIDE County, California

LAZAR, SEYMOUR Property Owner

Township	Range	Meridian	Section
T 3 S	R 3 E	S.B.	8

Scale 1" = 792' Date 10/1984
REV. 12/26/84

Exhibit "A" TE- RIV-106

1 8 7 0

FRAME NO.

CONTROL NO. 26507 | DATE 01-25-85 | ROLL NO 85-R013

83485 106692

FORM RW 82 800 5-48

RIGHT-OF-WAY EASEMENT

THE UNDERSIGNED, HIGHWAY LAND COMPANY, a corporation,

for and in consideration of the sum of Ten Dollars ($10.00), lawful money of the United States, paid by SOUTHERN CALIFORNIA EDISON COMPANY LTD., a Corporation, receipt whereof is hereby acknowledged, hereby grants, bargains, sells and conveys unto said SOUTHERN CALIFORNIA EDISON COMPANY LTD., a Corporation, its successors and assigns, those permanent and exclusive easements and rights of way to construct, reconstruct, maintain, operate, enlarge, improve, remove, repair and renew two electric transmission lines consisting of steel towers, wires, cables and other structures, including ground wires, both overhead and underground, and communication circuits with necessary and convenient foundations, insulators and cross-arms placed on said towers, and other appurtenances connected therewith, convenient and necessary for the construction, maintenance, operation, regulation, control and grounding of electric transmission lines for the purpose of transmitting, distributing, regulating, using and controlling electric energy, together with the right and easement for roads, ingress, egress and other convenient purposes needed or desired at any time by the Grantee, and the right and easement to construct, reconstruct, maintain and operate the same, and the right to clear and keep clear said easements and the real property affected thereby, free from explosives, buildings, structures, trees, brush and inflammable materials, for the protection from fire and other hazards; in, under, upon, over and across a strip of land 300 feet wide upon the following described lands and premises, situated in the County of Riverside, State of California, to-wit:

All that portion of Section 8, in Township 3 South, Range 3 East, S.B.B.& M., which lies North of the State Highway (Banning-Whitewater Highway).

Said strip of land is described as follows:

A strip of land 300 feet wide, the Southerly and Northerly boundary lines of which are parallel with and respectively 100 feet Southerly and 200 feet Northerly from a line described as follows:

Beginning at a point in the West line of said Section 8, distant 241.93 feet Southerly, measured along said West line, from the Northwest corner of said Section 8; thence from said point of beginning, Easterly, in a straight line, 5300 feet, more or less, to a point in the East line of said Section 8, distant 438.52 feet Southerly, measured along said East line, from the Northeast corner of said Section 8.

The side lines of said strip of land to be shortened or extended so as to terminate in the West and East lines of said Section 8.

1 8 0 1

FRAME NO.

CONTROL NO. 26507 | DATE 01-25-85 | ROLL NO 85-R013

Grantee shall have the right to use existing roads and make such additions thereto, on the lands of the Grantor, as shall be convenient and necessary to the Grantee's use of said right of way strip.

Together with all necessary and convenient means of ingress and egress to and from said above described right of way strip, for the uses and purposes and the exercising of the rights herein granted. Said right of entry may be exercised by trucks, automobiles or other vehicles or by foot, as may suit the convenience of said Grantee, its successors or assigns.

The Grantors reserve the rights for water pipe lines and roads under and across the land described in this easement provided these rights do not interfere with the operation and maintenance of the transmission lines of the Grantee.

Grantee shall have the right to install and to use gates in any fences which are now or may be hereafter constructed on said lands of the Grantor, for the purpose of permitting convenient entry to said right of way strip. Any gates which are installed by Grantee on said lands shall be locked with Grantee's locks, and also, if the Grantor so desires, may be locked with the Grantor's locks, in such a manner that either can lock or unlock the gates. Any gates which are installed and locked by the Grantor and used by the Grantee shall be locked also by the Grantee's locks so that either can lock or unlock the gates.

Grantee shall have the right to make such surface cuts within said right of way strip as may be necessary to maintain the clearance from conductors to the surface of the ground that may be required by the orders of the State Railroad Commission, or other Governmental body having jurisdiction thereof, or as may be necessary for the economical construction, maintenance and operation of said transmission lines.

The Grantor, his heirs, successors or assigns, shall have the right to cultivate the land within the right of way strip for any and all crops which may be grown thereon, without interference with the rights herein granted to the Grantee, its successors or assigns, provided that said Grantor, his heirs, successors or assigns, in the use of said land, shall not permit or allow any accumulation of explosive or inflammable materials within the said right of way strip or so near thereto as to constitute, in the opinion of the Grantee, its successors or assigns, a menace or danger to said transmission lines. In case the Grantor, his heirs or assigns, shall grow orchard or other trees within the limits of said right of way strip, they shall not permit the same to attain a height in excess of 15 feet above the surface of the ground, and in case any such trees shall grow taller than said height, then the Grantee, its successors or assigns, shall have the right to trim the same in order to maintain said height as a maximum.

The Grantor grants to the Grantee, its successors and assigns, the right to trim or top and to keep trimmed or topped any and all trees on the lands of the Grantor adjacent to said right of way strip for a distance of 75 feet from the exterior lines of the right of way strip, to such heights as in the judgment of the Grantee, its successors and assigns, shall be reasonably necessary for the proper construction, operation and maintenance of said electric lines, but at no point outside the right of way strip to a height less than 35 feet.

It is understood and agreed that the grant of this easement does not convey to the Grantee any right, title or interest in any oil, gas or hydrocarbon substances or minerals within the limits of the right of way strip or otherwise, but that the Grantor, in prospecting for or developing oil, gas, hydrocarbon substances or minerals, will do so from adjacent land and in such a manner as not to interfere with the structures erected by the Grantee or with the operation of the transmission lines of the Grantee.

It is further understood and agreed that no other easement or easements shall be granted on, under or over said strip of land by the Grantor to any person, firm or corporation without the previous written consent of said Grantee.

0 8 0 3

FRAME NO.

CONTROL NO. 26507 | DATE 01-25-85 | ROLL NO 85-R013

83485

*

The Grantors reserve the rights for streets, (paved, graded or otherwise), sewage lines, gas lines, electric lines and any and all other rights of way for facilities necessary in connection with the needs and conveniences of inhabitants who may, at any time in the future, make their residence and carry on business operations on the property through which the within easement is granted, it being understood and agreed that said lines and rights of way are reserved by the Grantor for crossing, paralleling and/or covering the top surface, as well as underneath the land described in this easement, the Grantor not being required to apply to Grantee for permission to use any of the rights herein reserved, but shall at all times, as, if and when such rights are used, do so in such manner that they will not interfere with the operation and maintenance of the transmission lines of the Grantee.

1 8 0 4

FRAME NO.

CONTROL NO. 26507 | DATE 01-25-85 | ROLL NO 85-R013

TO HAVE AND TO HOLD the above mentioned easements and rights unto SOUTHERN CALIFORNIA EDISON COMPANY LTD., its successors and assigns forever.

IN WITNESS WHEREOF, we have hereunto set our hands this 21st day of June, 1946.

WITNESS:

HIGHWAY LAND COMPANY

By: [signature], President

By: [signature], Asst. Sec'y.

STATE OF _____ }
COUNTY OF _____ } ss.

On this _____ day of _____, 194____, before me, _____, a Notary Public in and for said County and State, duly commissioned and qualified, personally appeared _____, known to me to be the person___ whose name___ _____ subscribed to the foregoing instrument, and acknowledged to me that __he__ executed the same.

IN WITNESS WHEREOF, I have hereunto set my hand and affixed my official seal in said County, the day and year in this certificate first above written.

_____

Notary Public in and for the County of _____, State of _____

STATE OF CALIFORNIA,
COUNTY OF _____ } ss.

On this _____ day of _____ in the year one thousand, nine hundred and _____ A.D., before me, _____, a Notary Public in and for said County, personally appeared _____ personally known to me to be the same person whose name is subscribed to the within instrument as a subscribing witness thereto, who, being by me duly sworn, deposed and said that he resides in the County of _____, State of California, that he was present and saw _____ _____ personally known to him to be the same person___ described in and whose name___ _____ subscribed to the within instrument as a party thereto, sign, execute and deliver the same; and that he acknowledged to said affiant that he executed the same; and that he, the affiant, then and there subscribed _____ name to said instrument as a witness.

IN WITNESS WHEREOF, I have hereunto set my hand and affixed my official seal in said County, the day and year in this certificate first above written.

_____

Notary Public in and for the County of _____ State of California

1805

FRAME NO.

CONTROL NO.	DATE	ROLL NO
26507	01-25-85	85-R013

THE POOR QUALITY OF THE ATTACHED ORIGINAL DOCUMENT HAS ADVERSELY AFFECTED REPRODUCTION. THIS IS THE MOST LEGIBLE IMAGE OBTAINABLE.

Return to 146721
SOUTHERN CALIFORNIA EDISON COMPANY LTD.
P. O. BOX 351
LOS ANGELES 53, CALIF.
ATTENTION—R. L. WHEELER 2239

SECURITY TITLE INSURANCE AND GUARANTEE COMPANY

COMPARED
G. Stanley
C. Ber[illegible]
INDEXED
Book & Paged

RECEIVED FOR RECORD
AUG 24 1945
30 Min. past 9 o'clock A. M. at
SECURITY TITLE INS. & GTEE. CO.
Copied in book No. 698
Official Records page 225
Reg. Recorder of Riverside Co.
California
Recorder.
By
Fee $ 530/19

930/19

1806

FRAME NO.

CONTROL NO.	DATE	ROLL NO
26507	01-25-85	85-R013

83485

STATE OF CALIFORNIA,
County of Los Angeles } ss.

ON THIS 21st day of June A.D., 19 45 before me, F. B. Olds a Notary Public in and for said County and State, personally appeared A. Otis Birch known to me to be the President, and Robert R. Landrum known to me to be the Asst. Secretary of Highway Land Company the Corporation that executed the within Instrument, known to me to be the persons who executed the within Instrument, on behalf of the Corporation herein named, and acknowledged to me that such Corporation executed the same.

IN WITNESS WHEREOF, I have hereunto set my hand and affixed my official seal the day and year in this certificate first above written.

F B Olds My Commission Expires June 18, 194.

Notary Public in and for said County and State.

ACKNOWLEDGMENT—CORP.—PRES. & SEC.—WOLCOTTE FORM 226 My Commission Expires June 18, 1947

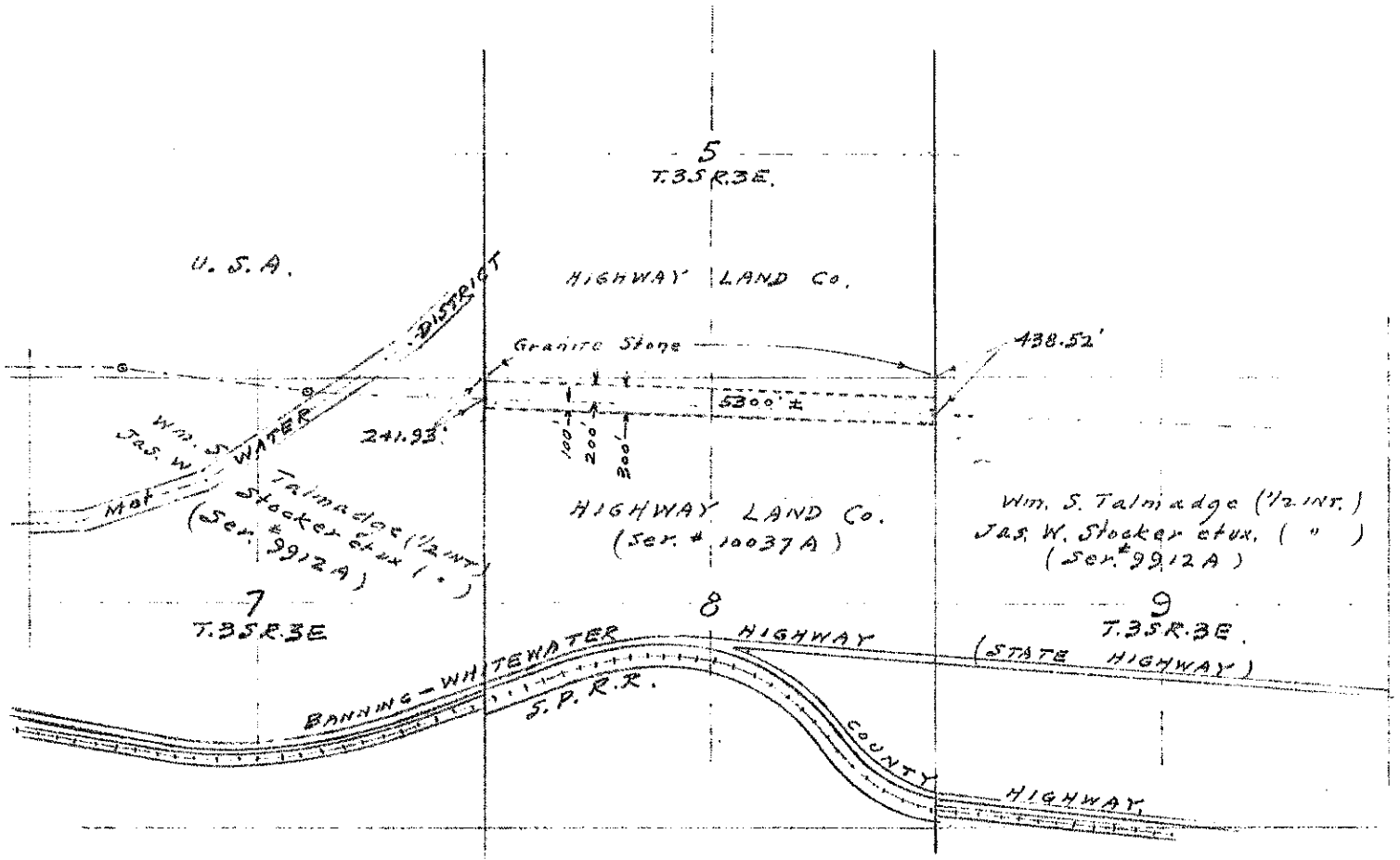
5
T.3S R.3E.
U. S. A.
HIGHWAY LAND Co.
DISTRICT
Granite Stone
438.52'
5300' ±
241.93'
100'
200'
300'
WATER
Wm. S. Talmadge (1/2 INT.)
Jas. W. Stocker etux. (")
(Ser. # 9912 A)
HIGHWAY LAND Co.
(Ser. # 10037 A)
Wm. S. Talmadge (1/2 INT.)
Jas. W. Stocker etux. (")
(Ser. # 9912 A)
7
T.3S R.3E
8
9
T.3S R.3E.
HIGHWAY
(STATE HIGHWAY)
BANNING-WHITEWATER
S. P. R. R.
COUNTY
HIGHWAY.

N

1" = 2000'

1 1 9 9

FRAME NO.

CONTROL NO.	DATE	ROLL NO
26507	01-25-85	85-R013

83485

September 25, 1945

Mr. C. E. Pichler
Executive Assistant

Herewith for filing in the vault recorded R/W agreement from Highway Land Company, dated 6/21/45, together with Policy #146721, Security Title Insurance & Guarantee Co. for $2500.00.

for 5300 feet of Third Boulder Transmission Line over All that portion of Section 8, in T. 3 S., R. 3 E. S.B.B.& M., which lies North of the State Highway.

Cost of R/W $ 2500.00 paid by Cash Voucher #70214 - 7/7/45

Remarks: Easement recorded 8/24/45 in O.R. 698-225, Riverside County.

H. L. WHEELER
Manager, Right of Way & Land Dept.

By H. L. Wheeler

Charge Account No. Easement Purchased in Escrow

Form 567-R-R Rev: 12/55

241164

TRANSMISSION EASEMENT
(Corporation)

241164

SECURITY TITLE INSURANCE COMPANY, a corporation, Grantor, does hereby grant to Grantee, CALIFORNIA ELECTRIC POWER COMPANY, a corporation, its successors and assigns, a right of way easement for the construction, maintenance, operation, reconstruction, enlargement, improvement, replacement, repair, inspection, patrol and removal of one or more electric transmission lines, and a telephone line, consisting of a line or lines of wood poles or steel towers or poles, or two-pole structures, and crossarms, insulators, conductors, wires, cables and braces attached to and supported thereby, and all necessary and convenient foundations, footings, guys, anchors, supports, groundings, attachments, fixtures and appurtenances, for the transmission and distribution of electricity for any and all purposes for which the same may be used, and communication purposes, which right of way easement hereby granted shall be 140 & 150 feet in width in, upon, over and across the following described real property situated in the County of Riverside, State of California, to-wit:

The North Half (N½) of the North Half (N½) of Section 8, Township 3 South, Range 3 East, San Bernardino Base and Meridian, EXCEPTING AND EXCLUDING therefrom that portion of San Gorgonio Pass No. 3, as shown by map on file in Book 33, pages 68 and 69 of Maps, Riverside County Records, located and lying within said North Half of the North Half of Section 8; ALSO EXCEPTING AND EXCLUDING therefrom that portion of San Gorgonio Pass No. 4, as shown by map on file in Book 34, pages 1 and 2 of Maps, Riverside County Records, located and lying within said North Half of the North Half of Section 8.

That portion of the right of way easement hereinafter described shall be 140 feet wide, measured at right angles, 70 feet on each side of the following described center line:

Beginning on the East line of said North Half of the North Half of Section 8, at a point South 0° 35' 25" East, 920.6 feet from the Northeast corner thereof, and running thence North 81° 48' 25" West, 804.6 feet to angle point lying within Lot 135 of said Excepted portion of San Gorgonio Pass No. 3, said angle point being located South 41° 34' 30" East, 169.2 feet from the Northwesterly corner of Lot 133 of said Excepted portion of San Gorgonio Pass No. 3; thence South 88° 01' 50" West, 3254.6 feet to a point hereinafter referred to as Point "B", located and lying within the Northwest Quarter of the Northwest Quarter of said Section 8; thence continuing South 88° 01' 50" West, 100 feet to a point and the end of said right of way easement 140 feet wide; EXCEPTING AND EXCLUDING therefrom those portions of said right of way easement 140 feet wide located and lying within said San Gorgonio Pass No. 3 and said San Gorgonio Pass No. 4.

That portion of the right of way easement hereinafter described shall be 150 feet wide, measured at right angles, 75 feet on each side of the following described center line:

Beginning on the West line of said North Half of the North Half of Section 8, at a point South 0° 04' 20" West, 417.8 feet from the Northwest corner thereof, and running thence South 87° 59' 10" East, 1020.4 feet to an angle point hereinafter referred to as Point "A"; thence South 28° 59' 10" East, 515.9 feet, more or less, to the hereinbefore described Point "B"; thence continuing South 28° 59' 10" East, 100 feet to a point and the end of said right of way easement, 150 feet wide.

Also beginning at the hereinbefore described Point "A", and running thence South 87° 59' 10" East, 100 feet to a point in the Northwest Quarter of the Northwest Quarter of said Section 8.

Also beginning at the hereinbefore described Point "A", and running thence North 28° 59' 10" West, 100 feet to a point in the Northwest Quarter of the Northwest Quarter of said Section 8.

In connection with and incidental to the right of way easement herein granted, the Grantor hereby grants to the Grantee herein, its successors and assigns, the following stated rights, to-wit:

The right of ingress to and egress from and to travel upon, over and along the right of way easement herein granted, on foot, or with teams, trucks, automobiles, tractors and other mobile equipment for transportation of workmen, materials, equipment and supplies, for all purposes in the exercise and enjoyment of the right of way easement and rights herein granted; and the right to construct, grade, maintain and use a road for all such purposes upon, along and within the limits of said right of way easement.

26235

Form 567-4-R Rev. 12/55

The right to clear and keep the right of way easement herein granted free and clear of trees, shrubs and brush for protection of said transmission lines and telephone line, and the conductor wires thereof, against contact, interference, interruption, fire, damage and other hazards, and for the safe and proper maintenance and operation of the same, and for that purpose to trim, cut back or top any and all trees now or hereafter existing within said right of way easement, to a height of not less than 18 feet above the ground; and to trim, cut back or top to a height of not less than 50 feet above the ground, any and all trees which now or hereafter may exist outside of and within 50 feet from the exterior limits of the right of way easement herein granted.

The right to clear and keep the right of way easement herein granted free and clear of buildings, structures, wells, well drilling equipment, derricks, booms, inflammable, combustible and explosive liquids and materials for protection of said transmission lines, and telephone line, and the conductor wires thereof, against fire, damage, obstruction, contact, interference, interruption, impairment of clearance and other hazards; and the Grantor hereby covenants and agrees for itself, its successors, successors in ownership and estate, assigns and lessees, that it or they will not construct, erect, place, maintain or use, or authorize or permit to be constructed, erected, placed, maintained or used, upon or within said right of way easement, any building, structure, well, well drilling equipment, derrick, boom, inflammable, combustible or explosive liquid or material, but they shall have the right to use the land upon and within said right of way easement for ordinary and usual grazing, agricultural, vinicultural and horticultural purposes, subject to and in a manner not inconsistent with the right of way easement and rights hereby granted to the Grantee.

Grantor shall have the right to construct and maintain fences along the exterior lines of the right of way easement herein granted, or across the same, but Grantee shall have the right to install, maintain and use gates in any fences now or hereafter constructed on the hereinbefore described real property of Grantor, convenient for Grantee's ingress to, egress from and travel along said right of way easement. Any or all gates installed by either Grantee or Grantor on said real property may be locked with Grantee's locks, provided, that Grantor may also have locks to such gates, both locks being so installed as to permit such gates to be opened by either the Grantee or the Grantor.

The covenants and agreements herein set forth shall extend and inure in favor and to the benefit of and shall be binding on the successors, successors in ownership and estate, assigns and lessees of the respective parties hereto; and all covenants and agreements herein contained shall run with the land.

Signed and dated this 31st day of March, 1958

SECURITY TITLE INSURANCE COMPANY

By [signature] Vice President

Attest: [signature] Asst Secretary

STATE OF CALIFORNIA
COUNTY OF _____ } SS.

On this _____ day of _____ in the year one thousand nine hundred _____, before me, _____ a Notary Public in and for said County and State, personally appeared _____ known to me to be the _____ President, and _____ known to me to be the _____ Secretary of the corporation that executed the within instrument, and known to me to be the persons who executed the within instrument on behalf of the corporation therein named, and acknowledged to me that such corporation executed the same, and acknowledged to me that such corporation executed the within instrument pursuant to its by-laws or a resolution of its board of directors.

WITNESS my hand and official seal.

(Seal) _____
Notary Public in and for said County and State

My Commission Expires _____

WHEN RECORDED, PLEASE MAIL THIS INSTRUMENT TO
Security Title Ins. Co.
480 Court St San Bernardino Calif

SPACE BELOW FOR RECORDER'S USE ONLY

25130

RECEIVED FOR RECORD
APR 8 1958
SECURITY TITLE INSURANCE COMPANY
BOOK 2251 PAGE 47
PRESS
PROTOSTATED
COMPARED
BY [signature]

Location - - Authority
P 229 3220-340 Prepared By RAP 3-11-58 R/W Dept. ke From Drawing No. T110-3, Sh. 15
Mapped in Palm Springs page 293,333 By [signature] Description Checked [signature] Civil Engineer
Approved as to legal features [signature] Attorney

241164

STATE OF CALIFORNIA
COUNTY OF San Bernardino } SS.

On March 31, 1958

, before me,

the undersigned

a Notary Public in and for said County and State personally appeared

J. W. Berry

known to me to be the Vice President,

and Elizabeth van Pittterswyk

known to me to be the Assistant Secretary

of the corporation that executed the within instrument, and known to me to be the persons who executed the within instrument on behalf of the corporation therein named, and acknowledged to me that such corporation executed the same, and acknowledged to me that such corporation executed the within instrument pursuant to its by-laws or a resolution of its board of directors.

WITNESS my hand and official seal.

(Seal)

Notary public in and for said County and State.

My Commission Expires

Misc.-185 (G.S.) Ack. Corp. Rev. 5-56 (Photo Form)
9-6-56 (Sgt.)