GENERAL NOTES

1. CONTRACTOR SHALL VERIFY ALL THE DIMENSIONS IN FIELD FOR PROPER COORDINATION OF WORK.
2. ALL THE REBARS SHALL CONFORM TO ASTM A–615 GRADE 60.
3. ALL STRUCTURAL STEEL SHALL CONFORM TO ASTM A–36 (MINIMUM YIELD STRENGTH OF 36 KSI). TAPERED SHAFT STEEL AND TOP FLANGE PLATES SHALL CONFORM TO ASTM A–572 GRADE 50.
4. ALL STEEL PIPE SHALL CONFORM TO ASTM A–53 GRADE B TYPE E OR S, OR API STANDARD 5L, GRADE B.
5. ALL STRUCTURAL STEEL SHALL BE FABRICATED AND ERECTED ACCORDING TO THE LATEST AISC SPECIFICATIONS AND OTHER CODES OF STANDARD PRACTICE.
6. ALL CONNECTION BOLTS SHALL CONFORM TO ASTM A–325N.
7. WELDING SHALL CONFORM TO THE AMERICAN WELDING SOCIETY STANDARD D1. 1–80. ELECTRODES FOR SHOP AND FIELD WELDS SHALL CONFORM TO ASTM A–233, CLASS E70XX SERIES.
8. DEWATERING WILL BE DESIGNED AND INSTALLED BY OTHERS.
9. ALL WORK SHALL BE PERFORMED IN ACCORDANCE WITH 2015 EDITION OF THE STATE OF CALIFORNIA CONSTRUCTION SAFETY ORDERS (CAL–OSHA).
10. THE LOCATIONS OF EXISTING AND NEW UNDERGROUND UTILITIES ARE SHOWN IN AN APPROXIMATE WAY ONLY, AND ALL UTILITIES MAY NOT BE SHOWN.
11. HEAVY VEHICULAR TRAFFIC SURCHARGES, SUCH AS CRANES, CONCRETE TRUCKS, MATERIAL TRUCKS OR MATERIAL STORAGE LOADINGS, SHALL BE PROHIBITED WITHIN 30 FEET FROM TOP OF EXISTING SLOPE EXCEPT FOR TEMPORARY CONSTRUCTION RAMPS AT THE FRONT SIDE OF THE SHORING BULKHEAD OR AS DISCRETION OF GEOTECHNICAL REPRESENTATIVE.
12. DUST SHALL BE CONTROLLED AT ALL TIMES DURING SHORING INSTALLATION, EXCAVATION AND GRADING.
13. PROVIDE MEANS TO PREVENT SURFACE WATER FROM ENTERING CRATER OR EXCAVATION.
14. INSTALLATION OF SHORING AND EXCAVATION SHALL BE PERFORMED UNDER THE CONTINUOUS OBSERVATION AND APPROVAL OF THE GEOTECHNICAL ENGINEER/REPRESENTATIVE.
15. NO TRENCHES OR EXCAVATIONS 4 FEET OR GREATER IN DEPTH INTO WHICH A PERSON IS REQUIRED TO DESCEND SHALL BE CONSTRUCTED BEFORE OBTAINING THE NECESSARY PERMITS FROM THE STATE OF CALIFORNIA DIVISION OF INDUSTRIAL SAFETY.
16. ALL CONSTRUCTION WORK SHALL CONFORM TO APPLICABLE PROVISIONS OF 2013 CALIFORNIA BUILDING CODE.

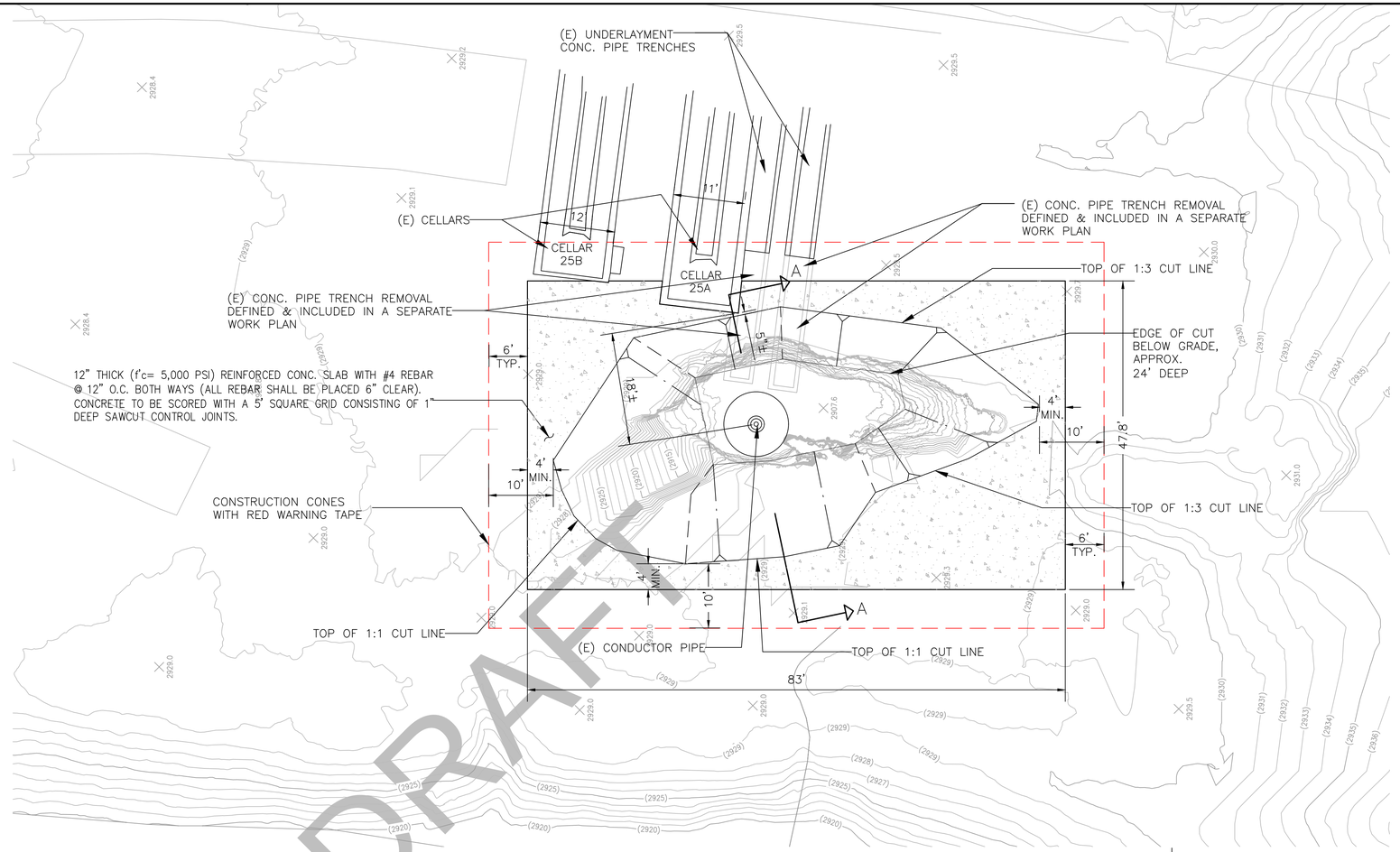

1 SITE PLAN

SCALE: 1"=10'–0"

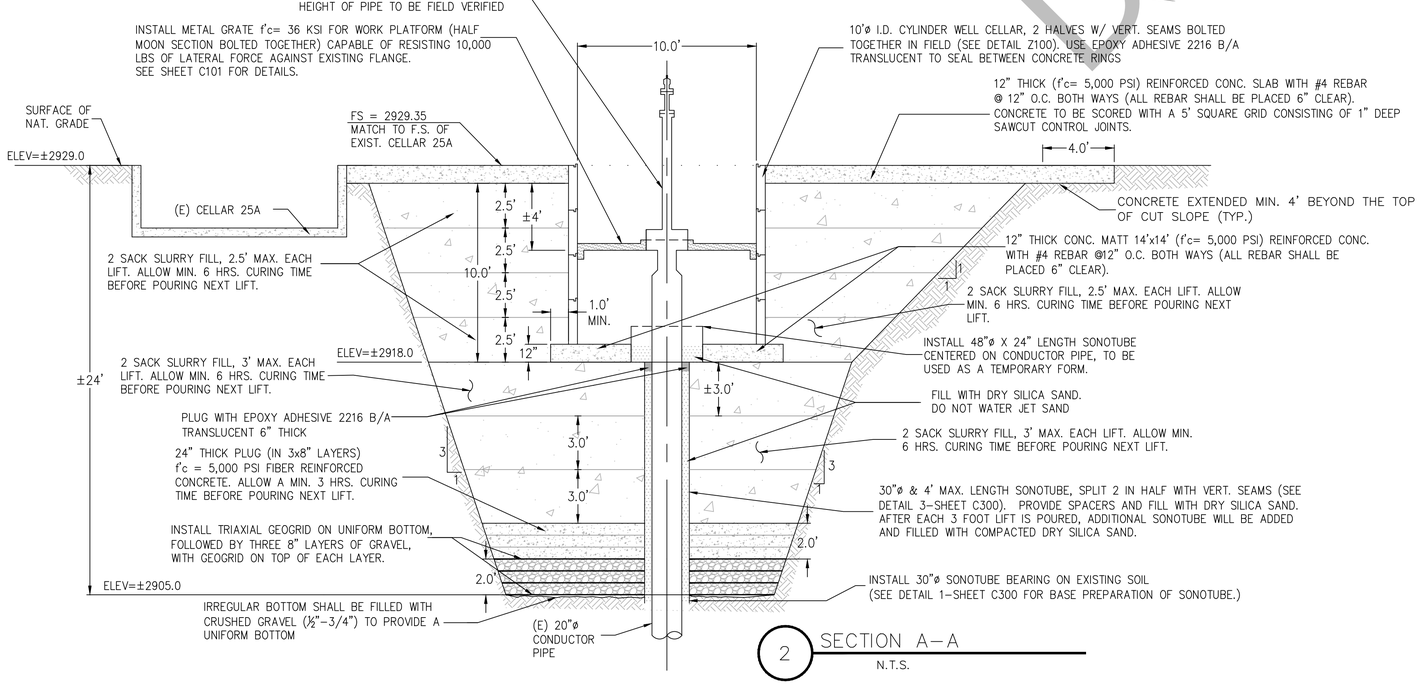

2 SECTION A–A

N.T.S.

ALISO CANYON STORAGE FIELD

SEMPRA SS25 PROJECT — NORTHRIDGE, CALIFORNIA

SS25 WELLSITE STABILIZATION
PLAN VIEW AND DETAIL

SCALE: AS SHOWN — PROJ. NO. — SHT. NO. C100

Underground Service Alert
Call: TOLL FREE
811
TWO WORKING DAYS BEFORE YOU DIG

NO.	DATE	REVISION	DSN'D	DFT'D	APV'D
14	6/2/16	UPDATED DRAWING	LLN	JN	SDL
13	5/31/16	UPDATED DRAWING	LLN	YD	SDL
12	5/23/16	UPDATED DRAWING	LLN	MM	SDL
11	5/13/16	UPDATED DRAWING	LLN	LLN	SDL
10	5/9/16	UPDATED DRAWING	LLN	LLN	SDL
9	5/5/16	UPDATED DRAWING	LLN	MM	SDL
8	5/3/16	UPDATED DRAWING	LLN	LLN	SDL

LEEDCO ENGINEERS, INC.
801 Bellevue Ave., E. Wenatchee, WA 98802 (509) 884-7611

A&M HENKELS & McCOY
9900 4th-7100
21 Rancho Cucamonga Drive, 2nd Floor
Rancho Cucamonga, CA 91730
Performance Has Built Our Business.
www.henkelsmccoy.com

PRELIMINARY DESIGN

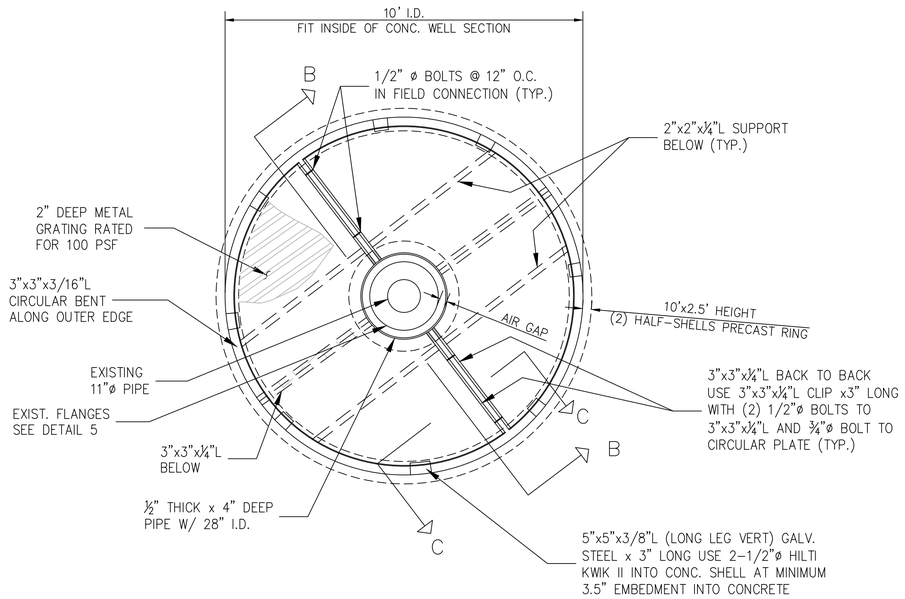

4 GRATING SCREEN TOP VIEW

NTS

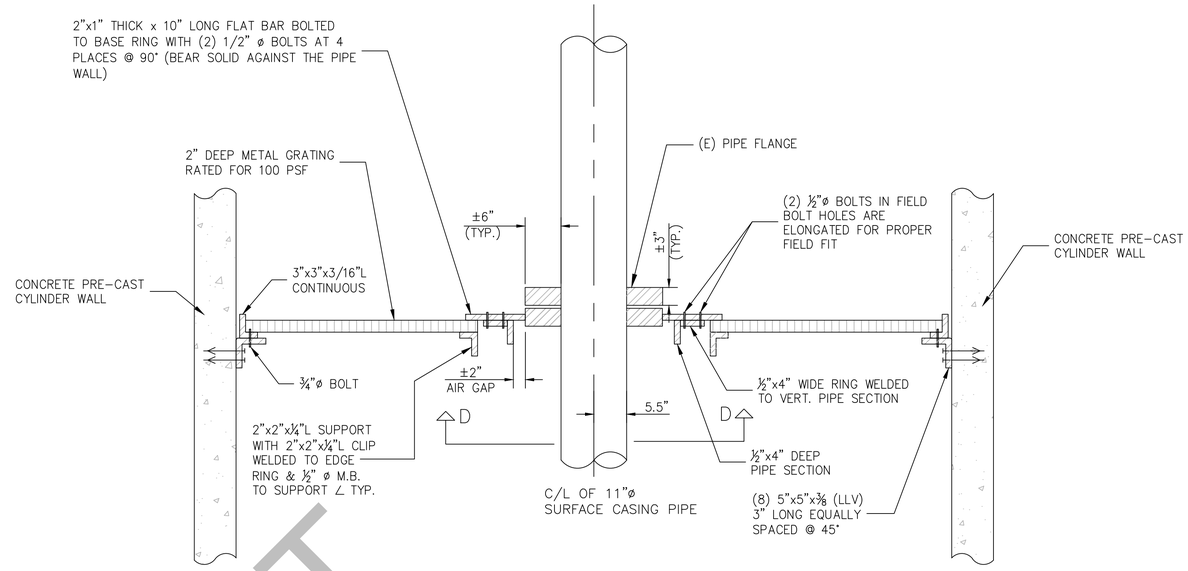

NOTES:
1. ALL WELDS SHALL BE ¼ FILLET AROUND BOTH SIDES OF PLATES.
2. ALL BEARING PLATE ADJUSTERS SHALL HAVE 4" OF ADJUSTMENT VARIANCES FROM THE EDGE OF THE GRATING.
3. ASSUMED MAXIMUM OF 4" VERTICAL SECTION OF THE 11" PIPE FLANGE AVAILABLE TO PRESS AGAINST THE GRATING & BEARING PLATE HEIGHT.
4. SHOP FABRICATION DRAWINGS OF DECK SUPPORT FRAME SHALL BE SUBMITTED TO STRUCTURAL ENGINEER FOR APPROVAL.

5 TYP. CROSS SECTION "B-B" OF GRATING

N.T.S.

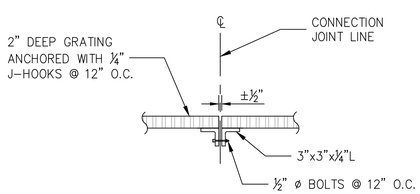

6 SECTION C-C

N.T.S.

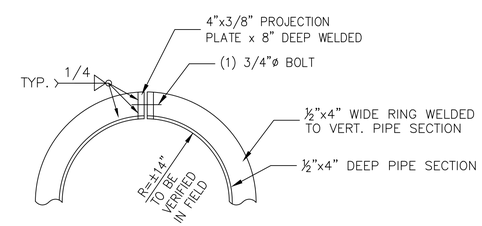

7 SECTION D-D

N.T.S.

DRAFT

ALISO CANYON STORAGE FIELD
SEMPRA SS25 PROJECT
NORTHRIDGE, CALIFORNIA

SS25 WELLSITE STABILIZATION
GRATING DETAILS

SHT. NO. C101
PROJ. NO.
SCALE: AS SHOWN

Underground Service Alert
Call: TOLL FREE
811
TWO WORKING DAYS BEFORE YOU DIG

NO.	DATE	REVISION	DSN'D	DFT'D	APV'D
9	6/2/16	UPDATED DRAWING	CDL	LLN	SDL
8	5/31/16	UPDATED DRAWING	CDL	LLN	SDL
7	5/23/16	UPDATED DRAWING	CDL	LLN	SDL
6	5/13/16	UPDATED DRAWING	CDL	MM	SDL
5	5/9/16	UPDATED DRAWING	CDL	LLN	SDL
4	5/5/16	UPDATED DRAWING	CDL	MM	SDL
3	4/27/16	UPDATED DRAWING	CDL	LLN	SDL

LEDCO ENGINEERS INC.
909 Hamilton Ave., El Cerrito, CA 94530 (510) 526-4200

A&M HENKELS & McCOY
(909) 483-7100
21 Technology Drive, Irvine, CA 92618
Performance First, Full Out Business, Positive Results

PRELIMINARY DESIGN

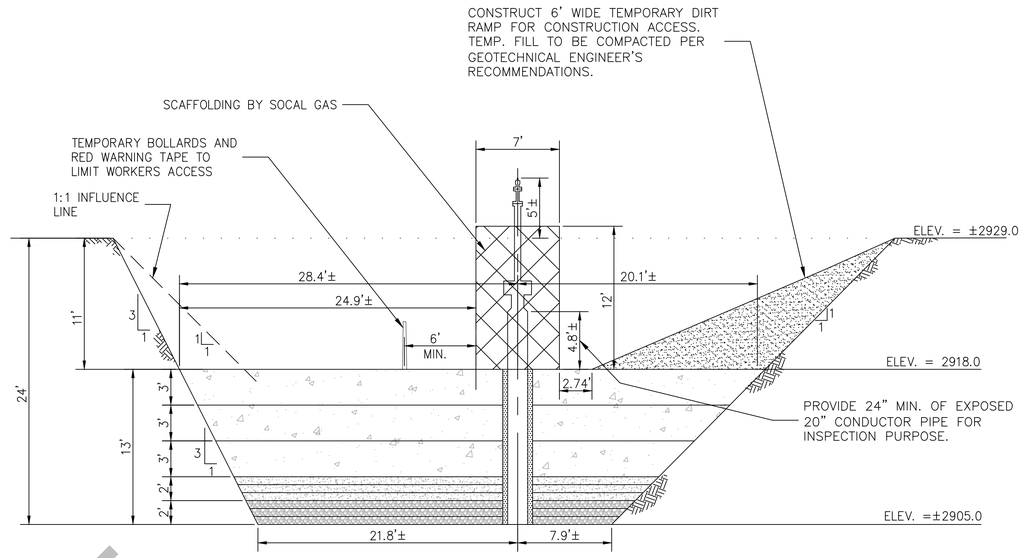

2 SECTION A–A

N.T.S.

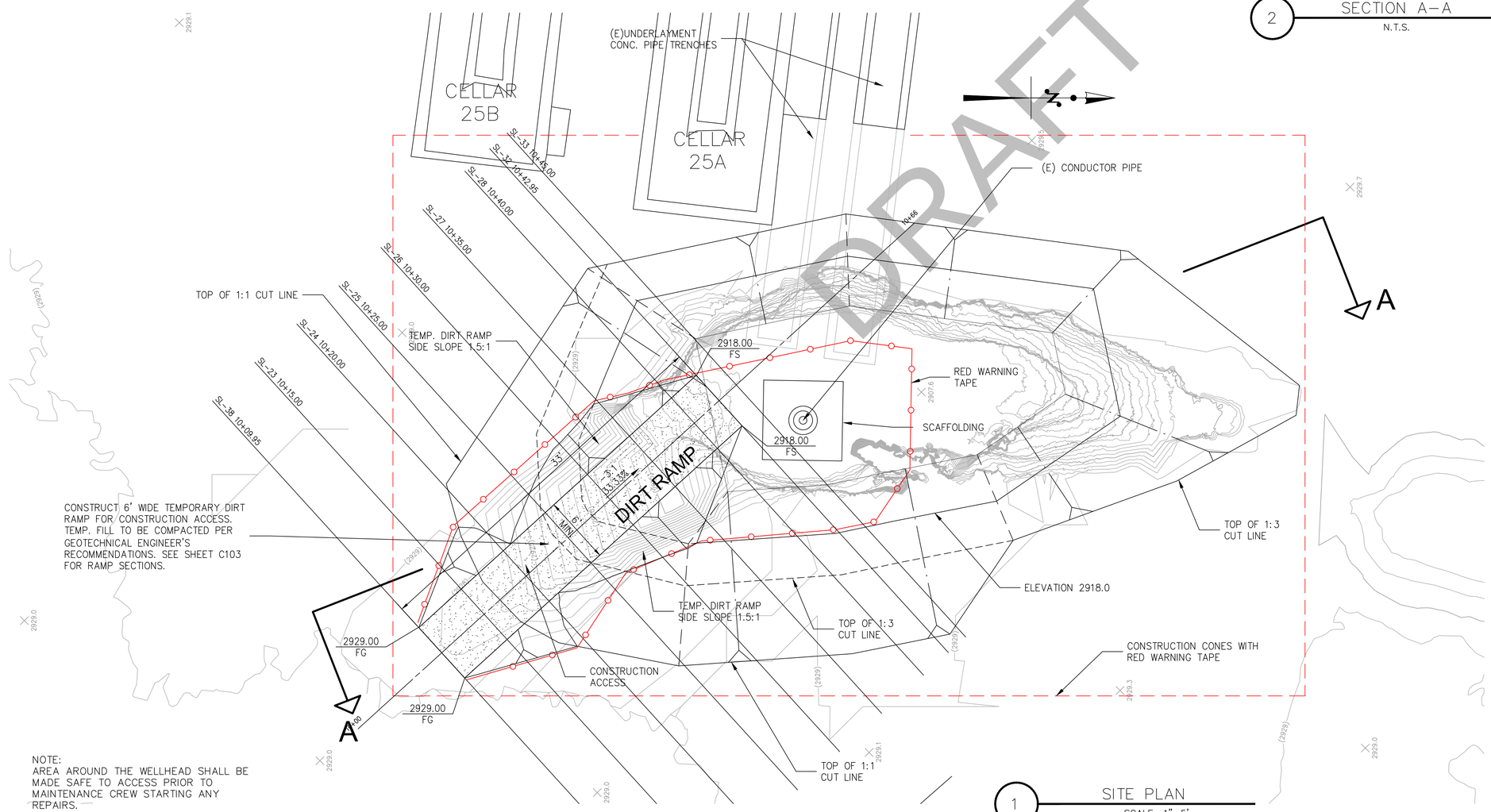

NOTE:
AREA AROUND THE WELLHEAD SHALL BE MADE SAFE TO ACCESS PRIOR TO MAINTENANCE CREW STARTING ANY REPAIRS.

1 SITE PLAN

SCALE: 1"=5'

ALISO CANYON STORAGE FIELD
NORTHRIDGE, CALIFORNIA
SEMPRA SS25 PROJECT

SS25 WELLSITE STABILIZATION
SCAFFOLDING PLAN VIEW & DETAIL

SCALE: AS SHOWN
PROJ. NO.
SHT. NO. C102

Underground Service Alert
Call: TOLL FREE 811
TWO WORKING DAYS BEFORE YOU DIG

NO.	DATE	REVISION	DSN'D	DFT'D	APV'D
9	6/02/16	UPDATED DRAWING	LLN	MM	SDL
8	5/31/16	UPDATED DRAWING	LLN	MM	SDL
7	5/23/16	UPDATED DRAWING	LLN	YD/MM	SDL
6	5/13/16	UPDATED DRAWING	LLN	YD	SDL
5	5/11/16	UPDATED DRAWING	LLN	YD	SDL
4	5/9/16	UPDATED DRAWING	LLN	YD	SDL
3	5/5/16	ISSUED FOR REVIEW	LLN	MM	SDL

LEDCO ENGINEERS, INC.

HENKELS & McCOY, INC.
(909) 548-7100
21 Technology, Irvine, CA 92618
Performance Into Built Environments...
Telecom, Power, Rail

PRELIMINARY DESIGN

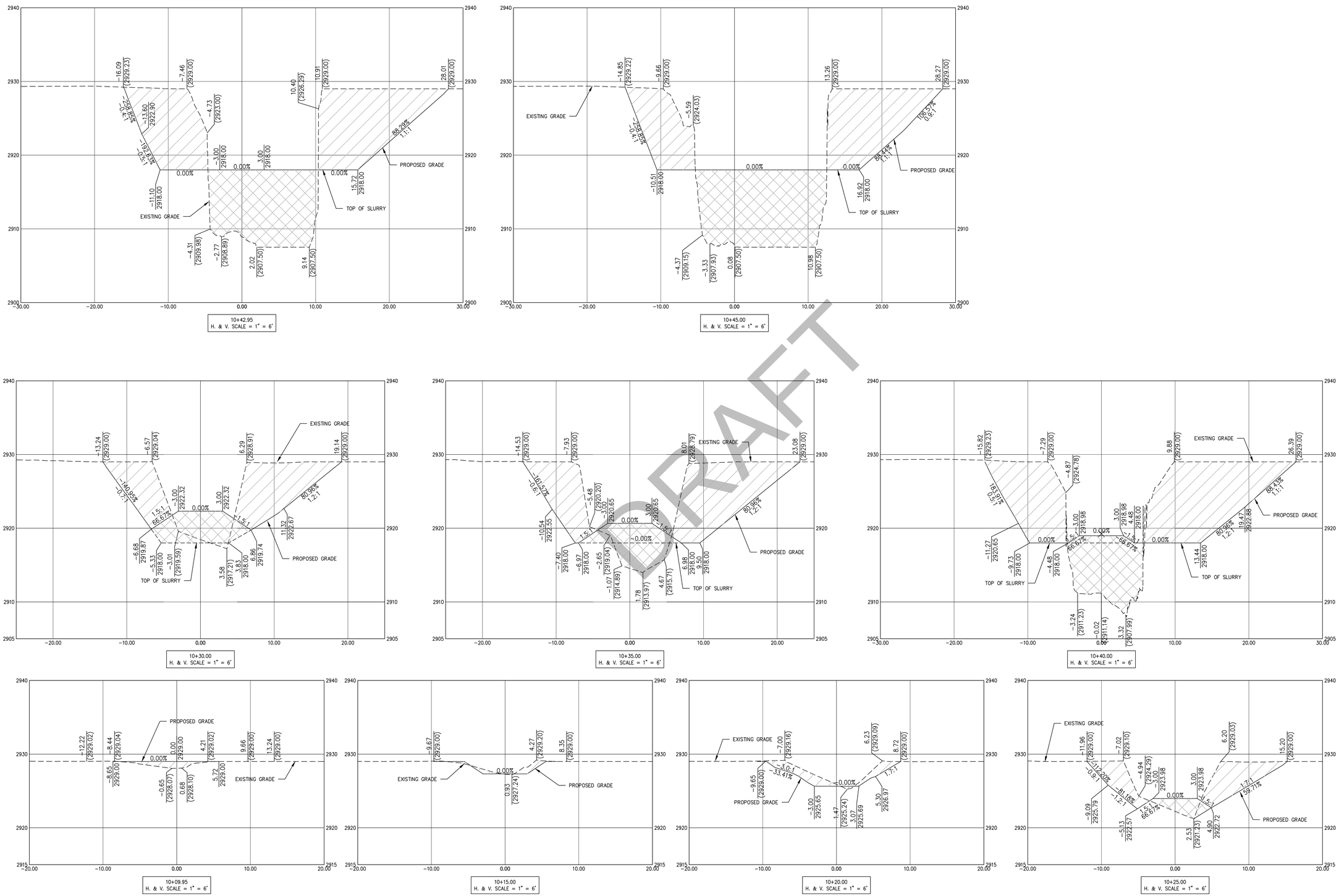

1 RAMP SECTIONS
H. & V. SCALE: 1"=6'

DRAFT

ALISO CANYON STORAGE FIELD
SEMPRA SS25 PROJECT NORTHRIDGE, CALIFORNIA

SS25 WELLSITE STABILIZATION
DIRT RAMP SECTIONS

SCALE: AS SHOWN
PROJ. NO.
SHT. NO. C103

Underground Service Alert
Call: TOLL FREE
811
TWO WORKING DAYS BEFORE YOU DIG

NO.	DATE	REVISION	DSN'D	DFT'D	APV'D
1	6/2/16	ISSUED FOR REVIEW	GH	MM	SDL
0	5/27/16	ISSUED FOR REVIEW	GH	MM	SDL

LEEDCO ENGINEERS, INC.

HENKELS & McCOY

PRELIMINARY DESIGN

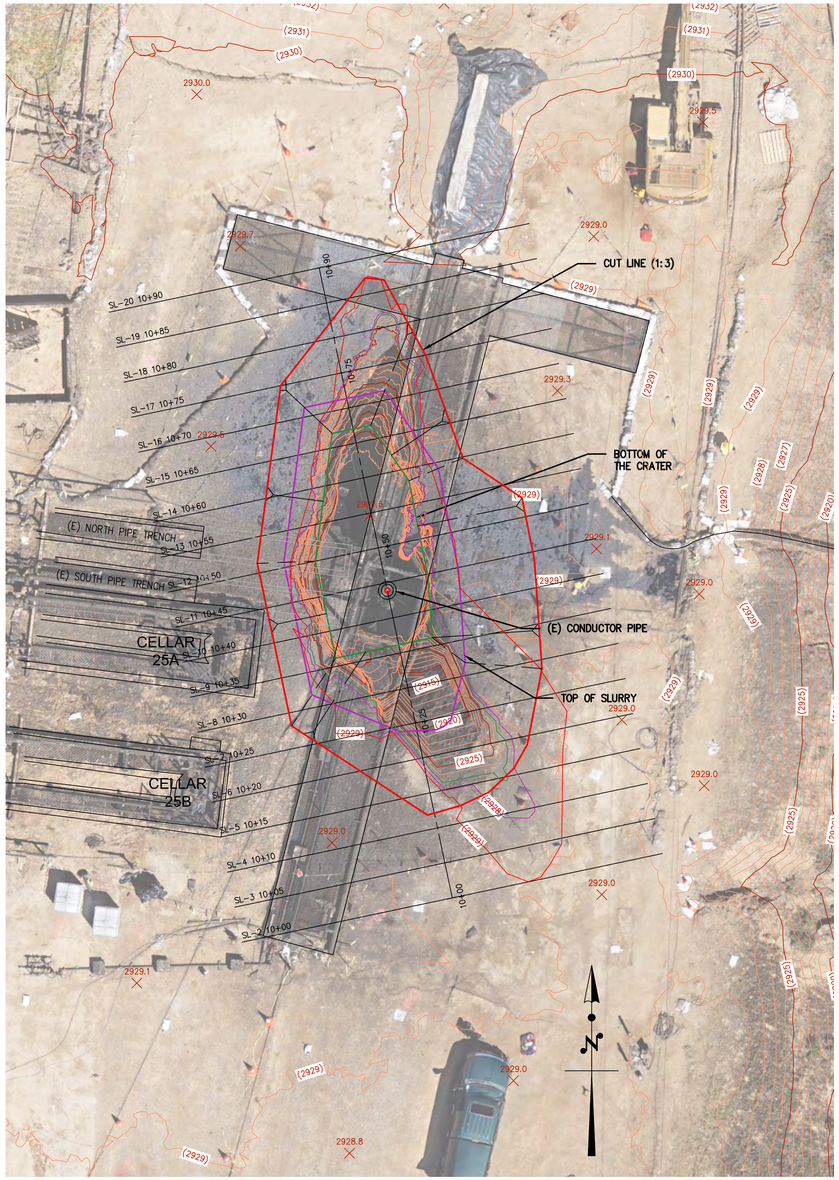

1 SITE PLAN

SCALE: 1"=10'-0"

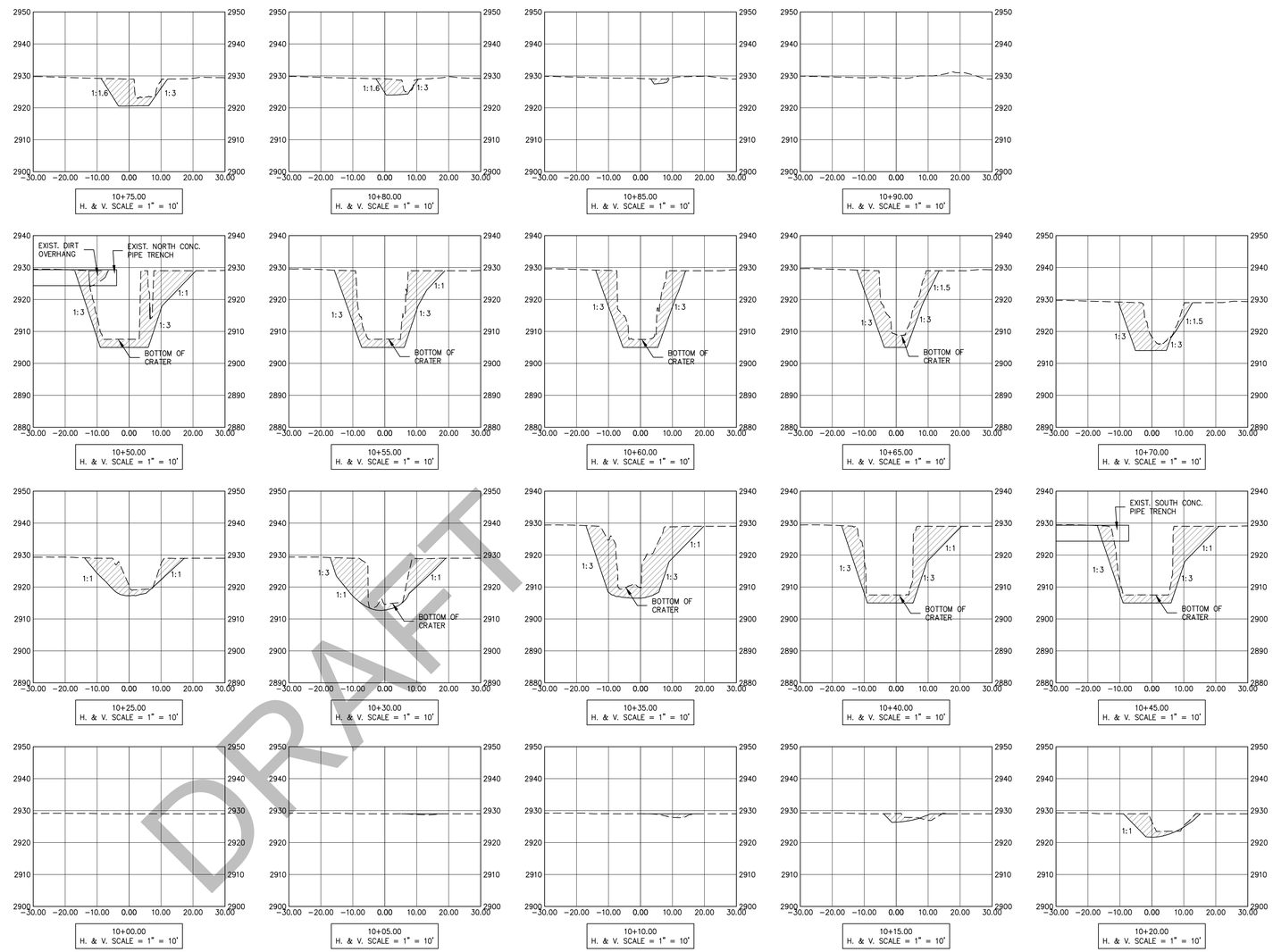

DRAFT

SS25 WELLSITE STABILIZATION CUT-FILL TABLE		
BOTTOM SURFACE AREA	392.20	SQ. FT.
CUT LINE TOP SURFACE AREA (1:3)	1802.47	SQ. FT.
DEPTH WITHOUT EXCAVATION	~22	FT.
TOTAL DEPTH AFTER EXCAVATION	~24	FT.
TOTAL CUT VOLUME	365±	CU. YD.
FILL VOLUME	463±	CU. YD.
TOTAL FILL VOLUME AFTER CUT	828±	CU. YD.

ALISO CANYON STORAGE FIELD
NORTHRIDGE, CALIFORNIA
SEMPRA SS25 PROJECT

SS25 WELLSITE STABILIZATION EARTHWORK VOLUME

SCALE: AS SHOWN
PROJ. NO.
SHT. NO. C200

Underground Service Alert
Call: TOLL FREE 811
TWO WORKING DAYS BEFORE YOU DIG

NO.	DATE	REVISION	DSN'D	DFT'D	APV'D
6	6/2/16	UPDATED DRAWING	LLN	MM	SDL
5	5/23/16	UPDATED DRAWING	LLN	MM	SDL
4	5/5/16	UPDATED DRAWING	LLN	MM	CDL
3	5/3/16	UPDATED DRAWING	LLN	YD	CDL
2	4/19/16	UPDATED DRAWING	LLN	YD	CDL
1	4/11/16	UPDATED DRAWING	LLN	LLN	CDL
0	4/8/16	ISSUED FOR REVIEW	LLN	LLN	CDL

LEEDCO ENGINEERS, INC.
8911 RESEARCH DRIVE, IRVINE, CA 92618 (949) 458-9670

W&H HENKELS & McCOY
(909) 465-7100
21 Rancho Santa Margarita Ste 150 Floor
Rancho Santa Margarita, CA 92688
Performance Has Built Our Business.
www.henkels.com

PRELIMINARY DESIGN

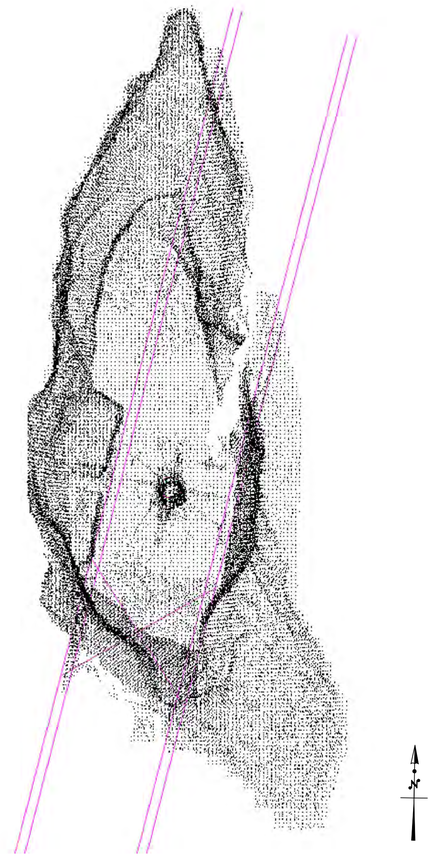

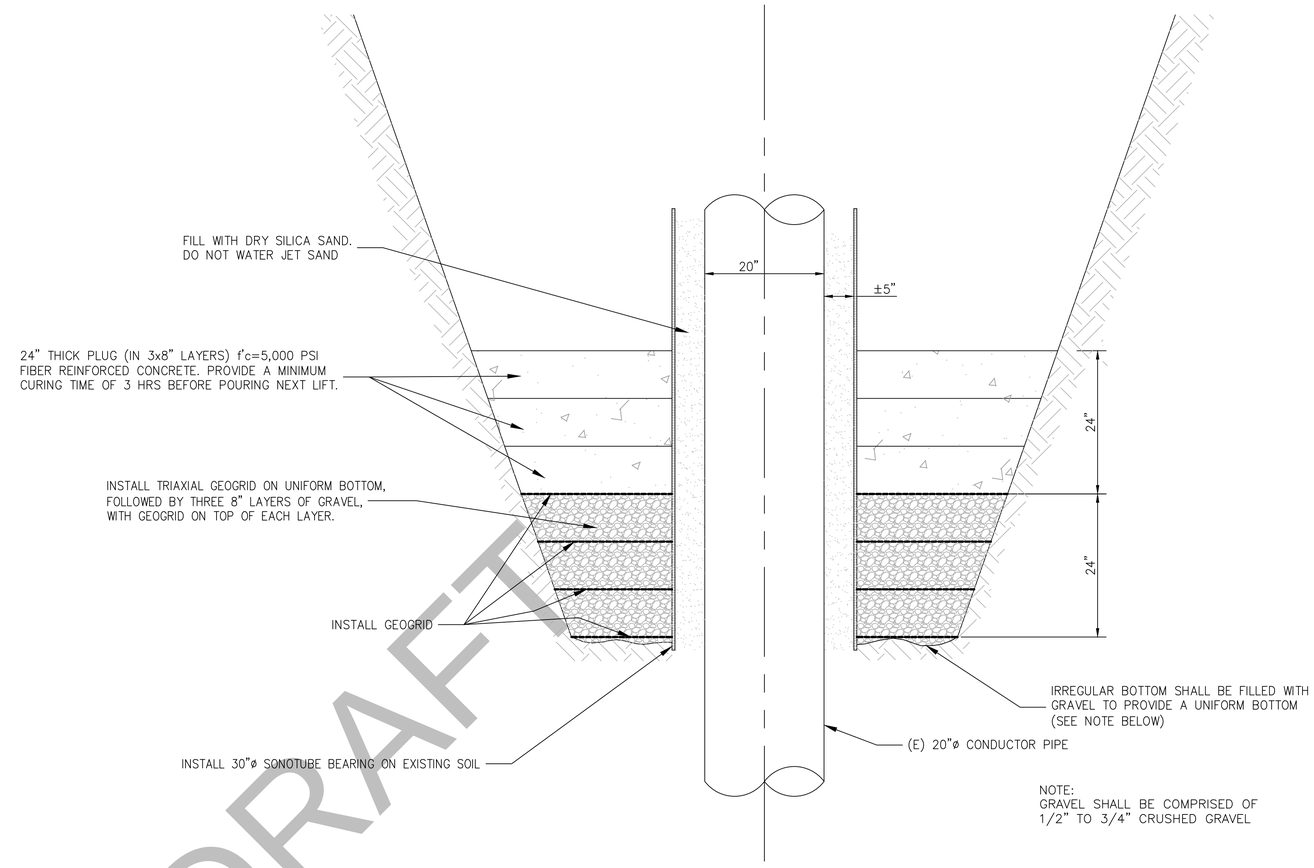

1 BASE PREPARATON OF SONOTUBE
N.T.S.

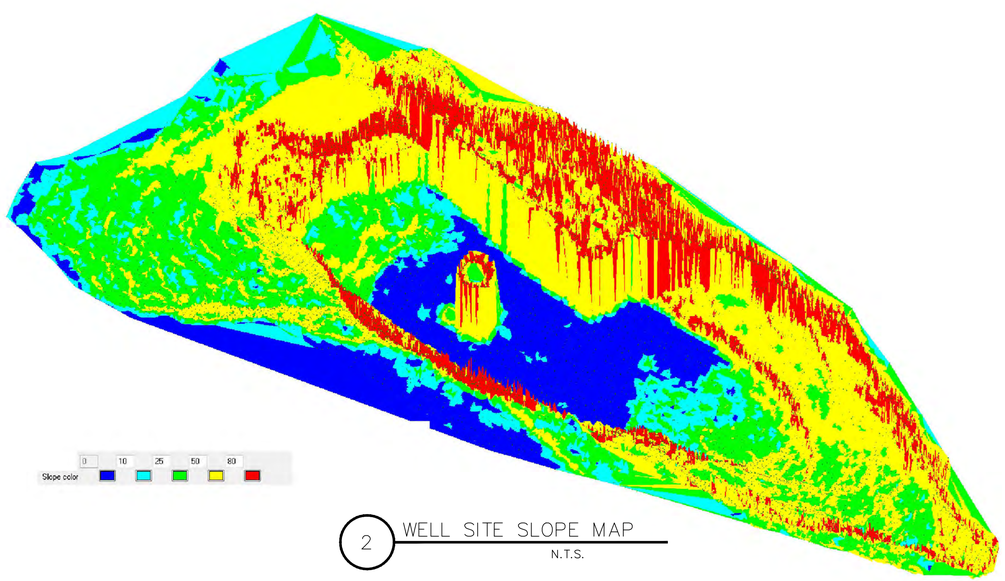

2 WELL SITE SLOPE MAP
N.T.S.

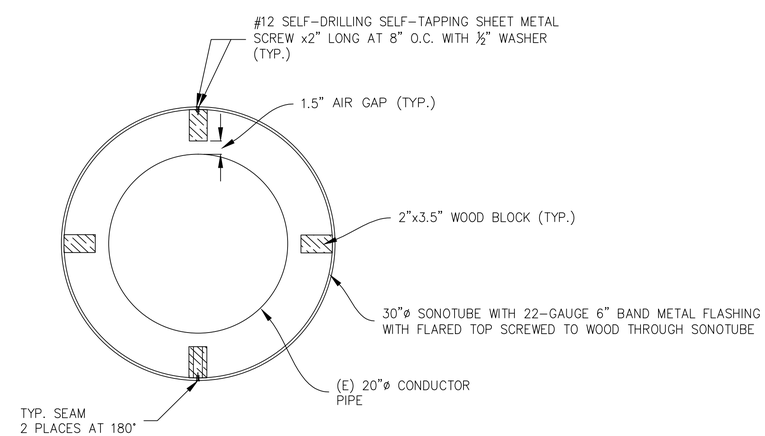

3 SONOTUBE DETAIL
N.T.S.

DRAFT

ALISO CANYON STORAGE FIELD
SEMPRA SS25 PROJECT — NORTHRIDGE, CALIFORNIA

SS25 WELLSITE STABILIZATION
SLOPE-3D VIEW & DETAILS

SCALE: AS SHOWN | PROJ. NO. | SHT. NO. C300

Underground Service Alert
Call: TOLL FREE 811
TWO WORKING DAYS BEFORE YOU DIG

NO.	DATE	REVISION	DSN'D	DFT'D	APV'D
8	6/2/16	UPDATED DRAWING	LLN	YD	SDL
7	5/31/16	UPDATED DRAWING	LLN	YD	SDL
6	5/23/16	UPDATED DRAWING	LLN	YD	SDL
5	5/13/16	UPDATED DRAWING	LLN	YD	CDL
4	5/5/16	UPDATED DRAWING	LLN	MM	CDL
3	5/3/16	UPDATED DRAWING	LLN	YD	CDL
2	4/25/16	UPDATED DRAWING	LLN	LLN	CDL

LEDCO ENGINEERS INC.
909 Hyde Park, St. Louis, Mo 63136 (314) 388-1000

H&M HENKELS & McCOY
(800) 404-7123
21 Florida Drive, Lakewood, NJ 08701
Performance Pipe Built On Business.
www.henkels.com

PRELIMINARY DESIGN

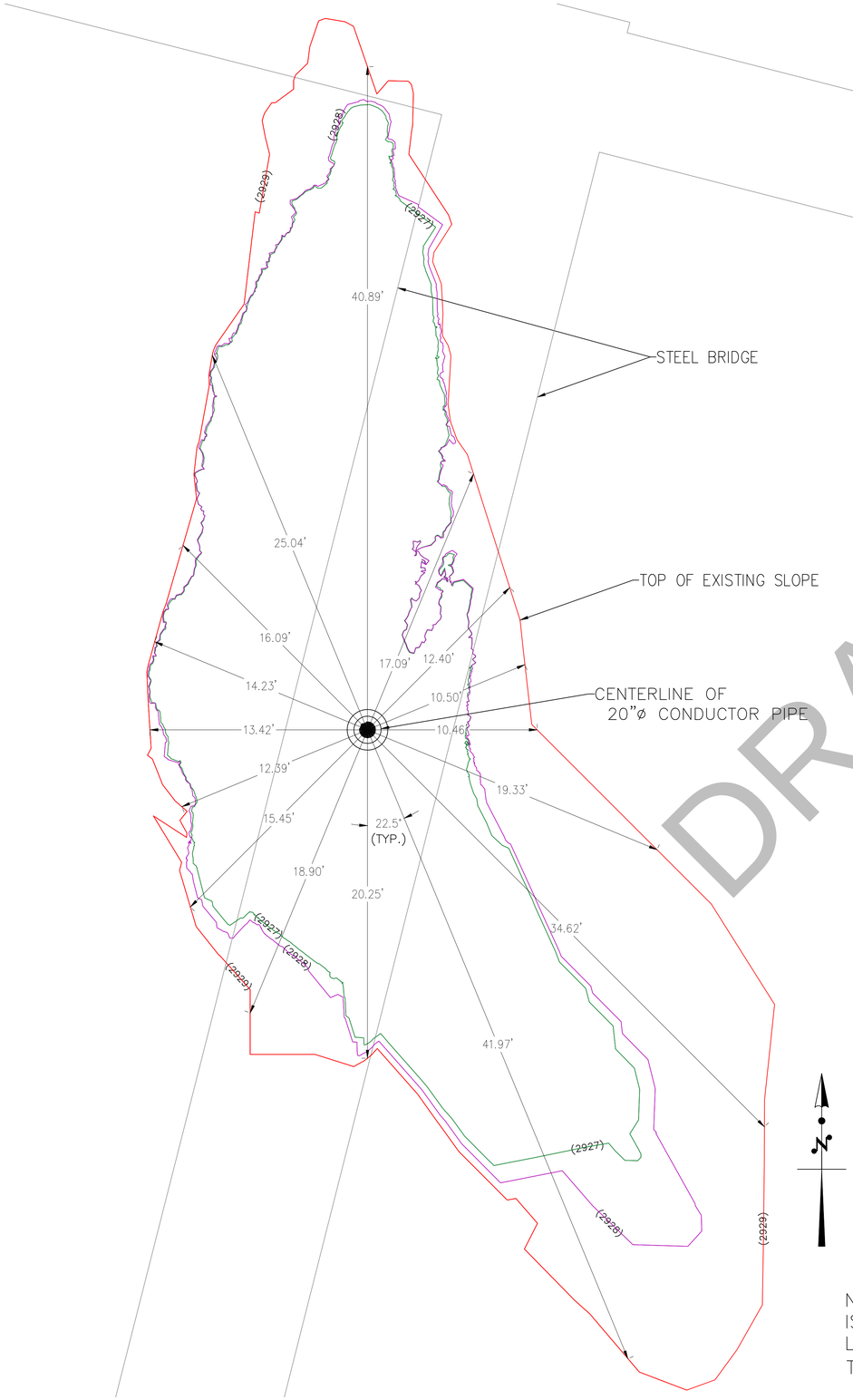

DRAFT

1 CLEARANCE BETWEEN CONDUCTOR PIPE
N.T.S.

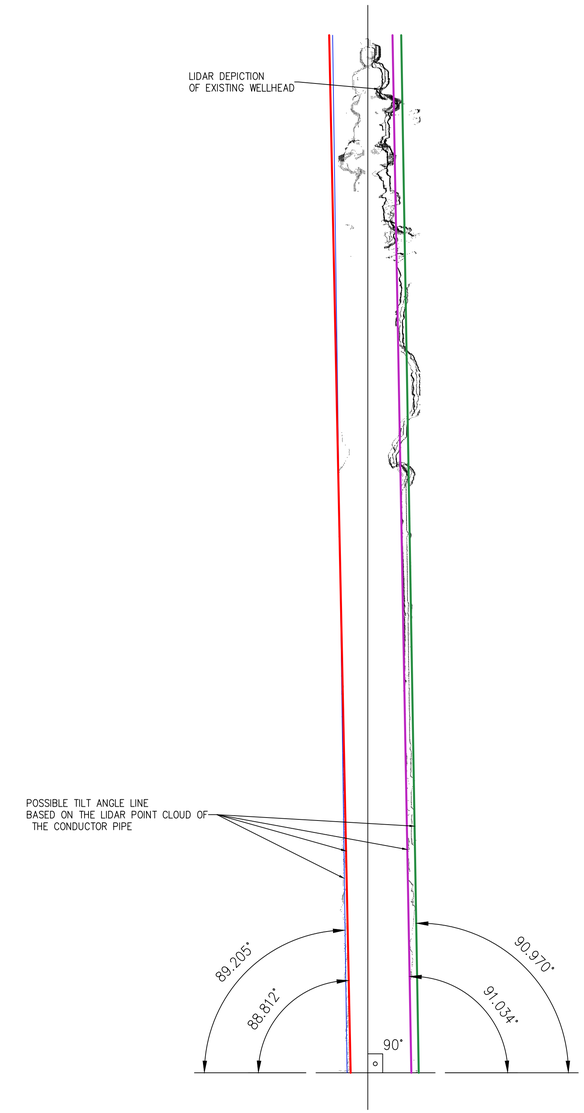

TILT ANGLE: MAX ~1.2°± 0.1°
MIN ~0.8° ± 0.1°

2 CONDUCTOR PIPE ANGLE
N.T.S.

NOTES: THE CENTERLINE OF THE CONDUCTOR PIPE IS SHOWN APPROXIMATELY BASED ON THE PROVIDED LIDAR DATA. THE DIMENSIONS ARE MEASURED FROM THE TOP SURFACE WITH (2929).0' ELEVATION.

ALISO CANYON STORAGE FIELD
SEMPRA SS25 PROJECT
NORTHRIDGE, CALIFORNIA

SS25 WELLSITE STABILIZATION
CONDUCTOR PIPE TOP VIEW & ANGLE

SCALE: AS SHOWN
PROJ. NO.
SHT. NO. C400

Underground Service Alert
Call: TOLL FREE
811
TWO WORKING DAYS BEFORE YOU DIG

NO.	DATE	REVISION	DSN'D	DFT'D	APV'D
4	5/23/16	ISSUED FOR REVIEW	LLN	YD	SDL
3	5/12/16	ISSUED FOR REVIEW	LLN	YD	CDL
2	5/5/16	ISSUED FOR REVIEW	LLN	MM	CDL
1	4/19/16	ISSUED FOR REVIEW	LLN	YD	CDL

LEEDCO ENGINEERS, INC.

H&M HENKELS & McCOY

PRELIMINARY DESIGN

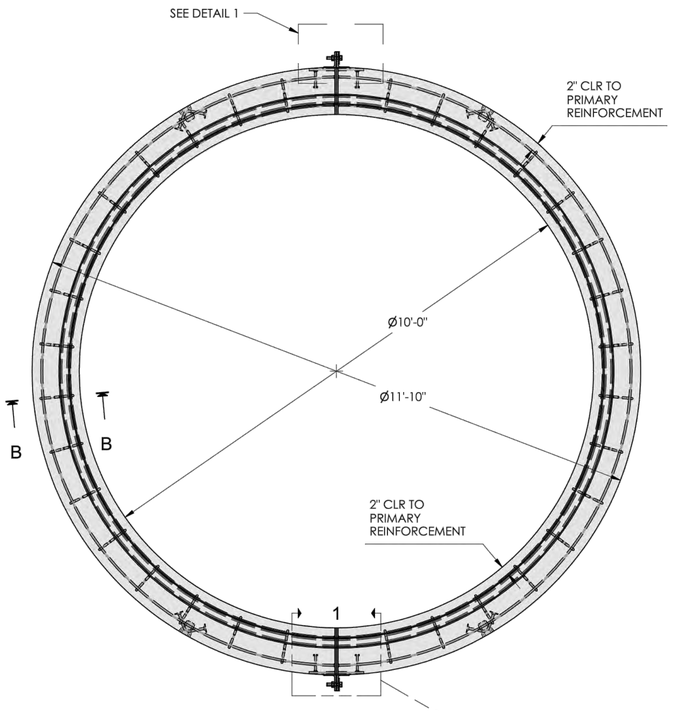

PLAN VIEW
SCALE 1 / 32

A A

STRUCTURAL NOTES:

DESIGN SPECIFICATIONS:
1. AASHTO STANDARD SPECIFICATIONS FOR HIGHWAY BRIDGES
2. ACI 318-11 BUILDING CODE REQUIREMENTS FOR STRUCTURAL CONCRETE
3. ASTM C857 STANDARD PRACTICE FRO MINIMUM STRUCTURAL DESIGN LOADING FOR UNDERGROUND PRECAAST CONCRETE UTILITY STRUCTURES

MATERIALS:
1. CONCRETE 28 DAY STRENGTH f'c = 6,000 PSI
2. CONCRETE STRIPPING STRENGTH f'ci = 1,500 PSI
3. REBAR - ASTM A706 GRADE 60

DESIGN CRITERIA:
1. LIVE LOAD = HS 20
2. CONCRETE DENSITY = 150 PCF
3. SOIL DENSITY = 120 PCF
4. HS 20 SURCHARGE = 80 PSF TO 8 FT BELOW GRADE
5. DRY SOIL LATERAL LOAD = 40 PCF
6. SATURATED SOIL LATERAL LOAD = 80 PCF
7. WATER TABLE DEPTH = 5 FT BELOW GRADE

GENERAL NOTES:
1. CONTRACTOR SHALL:
   1.1 GROUT AND / OR SEAL ALL JOINTS AS REQUIRED
   1.2 VERIFY ALL DIMENSIONS AND OPENING LOCATIONS
2. DO NOT BACKFILL UNTIL VAULT HAS BEEN COMPLETELY ASSEMBLED

PRODUCTION NOTES:
1. TOLERANCES ARE PER ASTM C858 STANDARD SPECIFICATION FOR UNDERGROUND PRECAST UTILITY STRUCTURES
2. REBAR MAY BE TACK WELDED OR TIED. ANY REBAR THAT INTERSECTS ANOTHER BAR WITHIN 2 BAR DIAMETERS OF A BEND MUST BE TIED AND SHALL NOT BE TACK WELDED
3. COIL AND FERRULE INSERTS SHALL BE RECESSED $\frac{1}{2}$" MIN UNLESS NOTED OTHERWISE

DRAFT

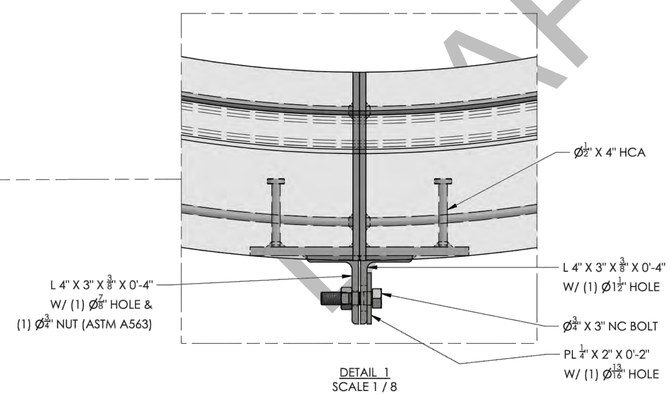

DETAIL 1
SCALE 1 / 8

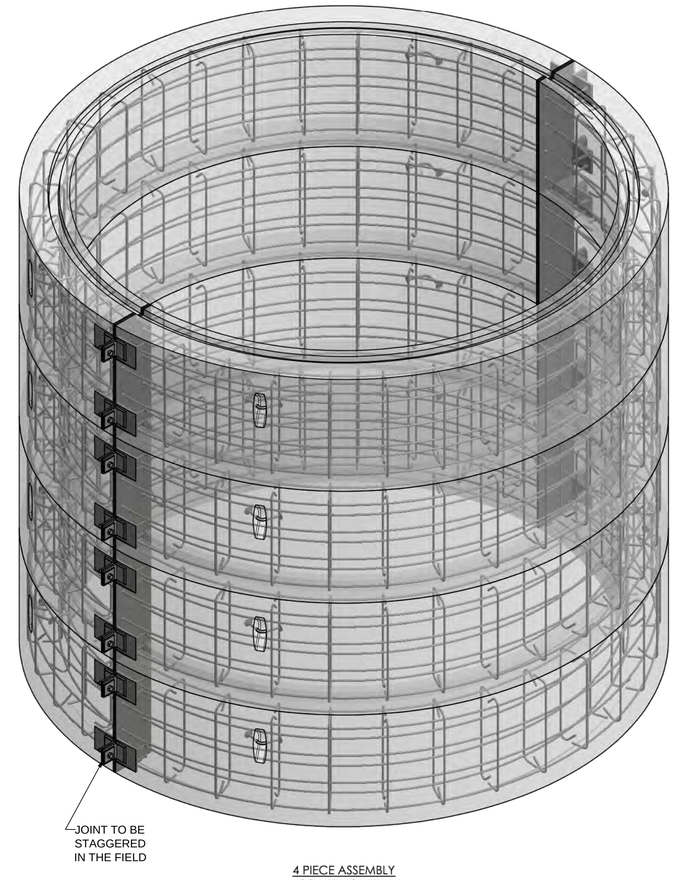

4 PIECE ASSEMBLY
ISOMETRIC VIEW
SCALE 1:30

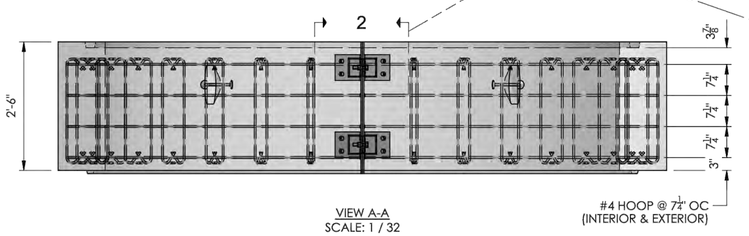

VIEW A-A
SCALE: 1 / 32

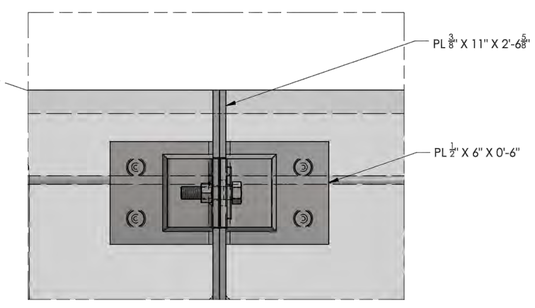

DETAIL 2
SCALE 1 / 8

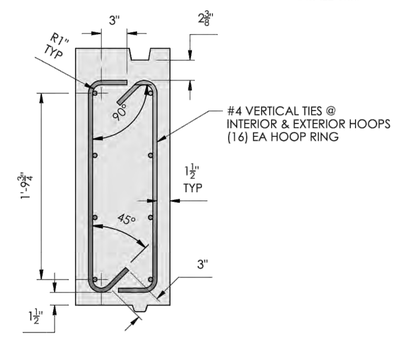

SECTION B-B
SCALE 1 / 16

ALISO CANYON STORAGE FIELD
SEMPRA SS25 PROJECT — NORTHRIDGE, CALIFORNIA

SS25 WELLSITE STABILIZATION
PRE-CAST CONCRETE CYLINDER DETAIL

SCALE: AS SHOWN | PROJ. NO. | SHT. NO. Z100

Underground Service Alert
Call: TOLL FREE 811
TWO WORKING DAYS BEFORE YOU DIG

NO.	DATE	REVISION	DSN'D	DFT'D	APV'D
4	6/2/16	UPDATED DRAWING	CDL/GD	LLN	SDL
3	5/23/16	UPDATED DRAWING	CDL	LLN	SDL
2	5/3/16	UPDATED DRAWING	CDL	LLN	SDL
1	4/11/16	UPDATED DRAWING	CDL	LLN	SDL
0	4/8/16	ISSUED FOR REVIEW	CDL	LLN	SDL

LEEGCO ENGINEERS, INC.
801 N. BRAND BLVD., 7th FLOOR, GLENDALE, CA 91203 (818) 240-7600

HENKELS & McCOY, INC.
(909) 460-7100
21 Technology Drive, Irvine, CA 92618
Performance Pipe Built On A Business...
www.henkels.com

PRELIMINARY DESIGN