California Public Utilities Commission

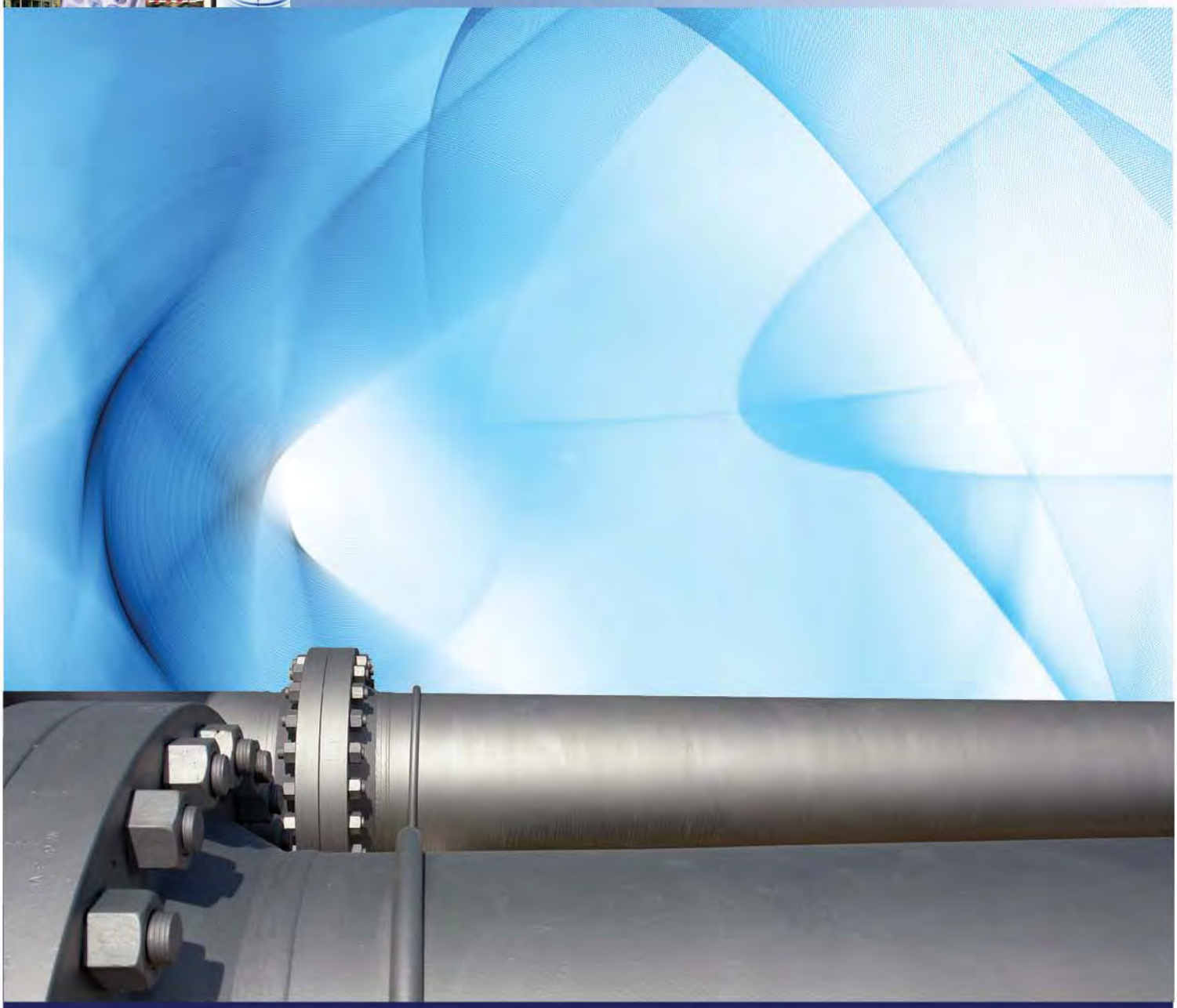

Consumer Protection & Safety Division
Incident Investigation Report

September 9, 2010 PG&E Pipeline Rupture in San Bruno, California

Released January 12, 2012

TABLE OF CONTENTS

I. EXECUTIVE SUMMARY 1

A. DESCRIPTION OF CPSD'S INVESTIGATION 1

B. NTSB INVESTIGATION 1

C. COMMISSION RESPONSE TO THE SAN BRUNO EXPLOSION 2

D. SUMMARY OF FINDINGS 3

II. APPLICABLE LAWS AND REGULATIONS 5

III. DESCRIPTION OF INCIDENT 7

A. PRE-INCIDENT GAS ODOR COMPLAINTS 13

IV. CONSTRUCTION OF FAILED PIPE SECTION 15

A. SUMMARY 15

B. DESCRIPTION OF LINE 132 15

C. DESCRIPTION OF SEGMENT 180 15

D. REGULATIONS AND INDUSTRY STANDARDS APPLICABLE IN 1956 18

1. ASA B31.1.8-1955 Background 18

2. ASA B31.1.8-1955 Applicable Requirements 19

E. FAILED PIPE SECTION DEFICIENCIES IDENTIFIED BY NTSB 19

1. Yield Strength 19

2. Welding 20

3. Fabrication 21

F. STRENGTH TESTING 22

G. MAOP 22

1. ASA B31.1.18-1955 MAOP Requirements 23

2. Grandfathering Clause 23

V. INTEGRITY MANAGEMENT 25

A. BACKGROUND 25

B. SUMMARY 25

C. DATA GATHERING AND INTEGRATION 27

1. Requirements for Data Gathering and Integration 27

2. Deficiencies in PG&E's Process for Data Gathering and Integration 29

D. THREAT IDENTIFICATION 35
1. Requirements for Threat Identification 35
2. Deficiencies in PG&E's Threat Identification Process 37
E. RISK ASSESSMENT 54
1. Requirements for Risk Assessment 54
2. Deficiencies in PG&E's Risk Ranking Algorithm 55
F. ASSESSMENTS 59
1. Other Assessment Methods That Should Have Been Used 59
VI. RECORDS 62
A. SUMMARY 62
B. APPLICABLE RULES AND STANDARDS 62
C. PG&E RECORD KEEPING PRACTICES 62
D. SEGMENT 180 CONSTRUCTION RECORDS 64
E. COMMISSION'S RECORD KEEPING DIRECTIVES AFTER THE INCIDENT 67
F. RECORD KEEPING ORDER INSTITUTING INVESTIGATION 68
VII. MILPITAS TERMINAL/SCADA 70
A. SUMMARY 70
B. SUPERVISORY CONTROL AND DATA ACQUISITION (SCADA) 70
C. DESCRIPTION OF PG&E'S GAS SCADA SYSTEM 71
D. SCADA ALARMS AND NOTIFICATIONS 73
E. OVERVIEW OF MILPITAS TERMINAL 74
F. OVERVIEW OF THE CONTROL SYSTEM AT MILPITAS TERMINAL 76
G. MILPITAS TERMINAL UPS FAILURE PRIOR TO SEPTEMBER 9, 2010 81
H. PG&E WORK CLEARANCE FOR UPS REPLACEMENT 82
I. ANALYSIS OF PG&E'S UPS CLEARANCE APPLICATION 84
J. PREPARATORY WORK AT MILPITAS TERMINAL ON SEPTEMBER 9, 2010 FOR THE UPS UPGRADE 86
K. RECORDED PRESSURE READINGS PRIOR TO THE RUPTURE 88
L. ANALYSIS OF THE RECORDED PRESSURE READINGS PRIOR TO THE RUPTURE 89
M. POST-INCIDENT REPLICATION BY PG&E 91
N. TRAINING AND QUALIFICATIONS OF GAS OPERATORS 92
O. ANALYSIS OF THE RESPONSE AT MILPITAS TERMINAL AND GAS CONTROL CENTER TO THE LOSS OF PRESSURE CONTROL 94

P. SUMMARY OF FINDINGS ON SCADA AND CONTROL SYSTEM AT MILPITAS TERMINAL AND GAS CONTROL CENTER 98

Q. POST-INCIDENT DRUG AND ALCOHOL TESTING 99

VIII. EMERGENCY RESPONSE 102

A. SUMMARY 102

B. BACKGROUND 103

1. PG&E's Operations 103

2. Valves: Manual, Automatic Shut-off, and Remote Control 103

3. Industry Standards for Response Time 107

C. PG&E'S EMERGENCY RESPONSE 108

1. PG&E's Actions 108

2. Adequacy of PG&E's Emergency Response 113

IX. SAFETY CULTURE 126

A. INTRODUCTION 126

B. PG&E COMPANY MANAGEMENT — FISCAL PRIORITIES 130

1. Organizational Impacts Due to Spending Reductions Were Not Important to Management 132

2. Dividends, Stock Repurchases, Bonuses, And Image Were Of Greater Importance to Management 140

C. PG&E COMPANY MANAGEMENT – NON-FISCAL PRIORITIES 144

1. The Company's Image 145

2. The Company's Political Influence 147

D. AN ETHICAL ORGANIZATIONAL CULTURE 149

1. Reactions to Critical Incidents 149

2. Public Safety and Employee Performance 155

3. Communication to Employees about Organizational Changes 156

4. Forthcoming with Complete Information 159

E. HOW PG&E VIEWS ITSELF 160

F. CONCLUSION 160

X. PG&E'S VIOLATIONS OF APPLICABLE LAWS AND REGULATIONS 162

XI. CPSD'S RECOMMENDATIONS 164

TABLE OF ACRONYMS

ANSI	American National Standards Institute
API	American Petroleum Institute
ASME	American Society of Mechanical Engineers
ASV	Automatic Shutoff Valve
BAP	Baseline Assessment Plans
COF	Consequence of Failure
DA	Direct Assessment
DFM	Distribution Feeder Main
DSAW	Double Submerged Arc Welding
ECDA	External Corrosion Direct Assessment
ERW	Electric Resistance Welding
EUO	Examination under Oath
FAQ	Frequently Asked Question
FSF	Failure Significance Factor
GIS	Geographic Information System
GSR	Gas Service Representative
HAA	Hot Applied Asphalt
HCA	High Consequence Area
ILI	In Line Inspection
IMP	Integrity Management Program
LOF	Likelihood of Failure
LTIP	Long-term Incentive Plan
LTIMP	Long-Term Integrity Management Plan
M&C	Manufacturing and Construction
MAOP	Maximum Allowable Operating Pressure
MOP	Maximum Operating Pressure
MP	Mile Post
NACE	National Association of Corrosion Engineers
NPMS	National Pipeline Mapping System
NTSB	National Transportation Safety Board
PAPA	Pipeline Association for Public Awareness
PAR	Pipeline Accident Report
PHMSA	Pipeline and Hazardous Materials Safety Administration
PIR	Potential Impact Radius
PLC	Programmable Logic Controller
PLSS	Pipeline Survey Sheets
PSI	Pounds per Square Inch
PSIG	Pounds per Square Inch Gauge
RMI	Risk Management Instruction
RCV	Remote Control Valve
RMP	Risk Management Procedure
SCADA	Supervisory Control and Data Acquisition
SMUD	Sacramento Municipal Utility District
SMYS	Specified Minimum Yield Strength
T&R	Transmission and Regulation
UPS	Uninterruptable Power Supply

I. Executive Summary

At 6:11pm on September 9, 2010, a 30-inch diameter natural gas transmission pipeline owned and operated by Pacific Gas and Electric (PG&E) ruptured in San Bruno, California. Gas escaping from the rupture ignited resulting in the loss of eight lives, injuries to 58 people, destruction of 38 homes, moderate to severe damage to 17 homes, and minor damage to 53 homes.

In this report the Consumer Protection and Safety Division (CPSD) finds that PG&E violated the Public Utilities Code, several federal and state pipeline safety regulations and failed to follow accepted industry standards. The investigation revealed that the incident was caused by PG&E's failure to follow accepted industry practice when constructing the section of pipe that failed, PG&E's failure to comply with integrity management requirements, PG&E's inadequate record keeping practices, deficiencies in PG&E's SCADA system and inadequate procedures to handle emergencies and abnormal conditions, PG&E's deficient emergency response actions after the incident, and a systemic failure of PG&E's corporate culture to emphasize safety over profits.

A. Description of CPSD's Investigation

The purpose of this investigation is to focus on PG&E's violations of applicable rules, laws, and regulations, and to make findings and recommendations based on the investigation, as well as incorporate some of the discoveries and findings of the National Transportation and Safety Board (NTSB) Investigation.

B. NTSB Investigation

The NTSB is a federal safety agency charged with the responsibility to investigate and determine the causes of various kinds of accidents in the United States, including accidents involving natural gas pipelines. Beginning on September 10, 2010, the day after the San Bruno pipeline rupture, the NTSB conducted an investigation of the cause of this tragedy. The NTSB's Accident Report (NTSB Report)[1] making root cause

[1] The NTSB's Accident Report of the San Bruno rupture and fire is titled "NTSB/PAR-11/01 PB2011-

findings was issued by the NTSB on August 30, 2011. CPSD staff participated in the NTSB investigation. The CPSD investigators arrived at the accident scene on the evening of September 9, 2010, and participated actively and continuously in the NTSB investigation.

C. Commission Response to the San Bruno Explosion

Several Commission proceedings have been initiated in the wake of the San Bruno explosion, and run concurrently with this investigation. On September 13, 2010, the Commission's Executive Director ordered PG&E to reduce operating pressure in Line 132 to a level 20% below the pressure at the time of the failure. PG&E complied and maintains it at that pressure today.

On September 23, 2010, the Commission ordered PG&E to "review the classification of its natural gas transmission pipelines and determine if those classifications have changed since the initial designation." (Resolution L-403.) Resolution L-403 also created an Independent Review Panel to gather and review facts, and make recommendations to the Commission for the improvement of the safe management of PG&E's natural gas transmission lines. On June 24, 2011 the revised "Report of the Independent Review Panel – San Bruno Explosion" was issued.

On January 3, 2011, the NTSB issued urgent Safety Recommendations P-10-2 and P-10-3 to PG&E to determine "the valid maximum allowable operating pressure" for its natural gas transmission lines "in class 3 and class 4 locations that have not had a maximum allowable operating pressure established through prior hydrostatic testing" through a "traceable, verifiable, and complete" search of its "as-built drawings, alignment sheets, and specifications, and all design, construction, inspection, testing, maintenance, and other related records."

The Commission's Executive Director, in a letter dated January 3, 2011 (the same date as the NTSB's Safety Recommendations), advised PG&E of the NTSB's Safety

---

916501" and is available at http://www.ntsb.gov/doclib/reports/2011/PAR1101.pdf.

Recommendations, and ordered PG&E to complete compliance with the recommendations by February 1, 2011. The Commission ratified the Executive Director's order on January 13, 2011, in Resolution L-410, and extended PG&E's date for the compliance report filing to March 15, 2011.

On February 24, 2011, the Commission instituted an investigation into whether PG&E violated applicable rules or requirements pertaining to safety recordkeeping for its gas service and facilities, including the PG&E San Bruno gas pipeline, Line 132.

Also on February 24, 2011, the Commission initiated a rulemaking proceeding to consider a "new model of natural gas pipeline safety regulation applicable to all California pipelines."

On November 10, 2011, the Commission instituted a new proceeding to determine whether PG&E's natural gas transmission pipeline system was safely operated in areas of greater population density or other areas identified as High Consequence Areas (HCAs), stemming from PG&E's compliance reports issued in response to Resolution L-403.

D. Summary of Findings

CPSD's investigation concludes that the San Bruno incident was caused by a combination of multiple contributing factors:

1. PG&E's failure to follow accepted industry practices when it constructed Segment 180 in 1956;
2. PG&E's failure to comply with the integrity management requirements;
3. PG&E's inadequate record keeping practices;
4. Deficiencies in PG&E's SCADA system and inadequate procedures related to the work at the Milpitas Terminal and PG&E's failure to comply with its own procedures;
5. PG&E's deficient emergency response actions after the incident; and
6. PG&E's corporate culture emphasizing profits over safety.

The investigation found the following code violations:

1. PG&E did not follow the accepted industry standards specified in ASA B31.1.8-1955 when it installed Segment 180 in 1956 and therefore violated the Public Utilities Code, Section 451.

2. PG&E violated Code of Federal Regulations (CFR) 49, Part 192, Subpart O, for its failure to comply with the integrity management requirements.
3. PG&E failed to keep adequate records for Segment 180 and failed comply with the industry standards specified in ASA B31.1.8-1955 and therefore violated the Public Utilities Code, Section 451.
4. PG&E violated 49 CFR Parts 192.605(c) and 192.13(c) for its failure to establish adequate procedures for recognizing abnormal operating conditions at the Milpitas Terminal and for not following its own procedures.
5. PG&E failed to timely test employees at the Milpitas Terminal for alcohol and therefore violated Part 199.225.
6. PG&E violated the Public Utilities Code, Section 451 for allowing deficiencies to exist in its SCADA system which interfered with its ability to detect and respond to the emergency.
7. PG&E violated Parts 192.605 and 192.615 and Public Utilities Code Section 451 for inadequately responding to a major incident and jeopardizing public safety.

II. Applicable Laws and Regulations

The California State Constitution, Article XII and California Public Utilities Code Section 222, give the California Public Utilities Commission (Commission) authority over natural gas operators in California. Pursuant to 49 United States Code (U.S.C.) §60101 *et seq*. the federal government regulates the safety of transportation of natural gas through pipelines. Many provisions of the California Public Utilities Code have relevance to this investigation. In particular, Section 701 empowers the Commission to do "all things…necessary and convenient" in the exercise of its powers and jurisdiction. Section 768 authorizes the Commission to promote and safeguard the health and safety of the public by establishing uniform standards for construction and maintenance of utility equipment and plant. Section 451, which has been in effect since 1909 when California began regulating utilities, requires all public utilities to provide and maintain "adequate, efficient, just, and reasonable" service and facilities as are necessary for the "safety, health, comfort, and convenience" of its customers and the public.[2] A violation of the Public Utilities Code or a Commission decision or order is subject to fines of $500 to $20,000 for each violation, for each ongoing day, pursuant to Sections 2107 and 2108. As of January 2012, SB 879 has increased the penalties up to $50,000 for each violation.

In order to enforce the federal regulations, state regulatory agencies such as the Commission may become certified by the Office of Pipeline Safety (an office of the U.S. Department of Transportation) under 49 U.S.C. §60105, so long as the state adopts the minimum federal standards (but the states may adopt more stringent standards where appropriate). The Commission has been certified and applies the federal pipeline safety regulations contained in 49 CFR Part 192, *et seq.* The Commission approved General Order (GO) 112-C in 1971 which adopted the federal pipeline safety rules in 49 C.F.R. Part 192. The Natural Gas Pipeline Safety Act of 1968 created 49 U.S.C. §60101, and prompted a federal rulemaking that promulgated 49 C.F.R. Part 192, adopted in 1971.

[2] The California Court of Appeals has upheld the Commission's authority to find Section 451 violations that are separate and distinct from any other rule or regulation. *PacBell Wireless v. PUC* (2006) 140

Pursuant to its constitutional and statutory mandate, the Commission created the first version of GO 112 in 1960 (effective July 1 1961) governing natural gas pipeline safety. GO 112 adopted the standards put forth by the American Society of Mechanical Engineers (ASME) that were followed by the industry at that time (ASME B31.1.8, in effect in 1955). General Order 112 has been updated several times – the current version is GO 112-E, last revised in 2008. General Order 112-E was substantially altered in order to automatically incorporate all revisions to the Federal Pipeline Safety Regulations, 49 CFR Parts 190, 191, 192, 193, and 199.

Cal.App. 4th 718. Section 451 was in effect in 1956, when Segment 180 of Line 132 was built.

III. Description of Incident

On September 9, 2010, at approximately 6:11pm, a 30-inch diameter natural gas transmission pipeline owned and operated by PG&E ruptured in San Bruno, California. Gas escaping from the rupture ignited resulting in the loss of eight lives, injuries to 58 people, destruction of 38 homes, moderate to severe damage to 17 homes and minor damage to 53 homes.

The section of pipeline involved in the incident was Segment 180, at Mile Post (MP) 39.28 of PG&E's Line 132, located at the intersection of Earl Avenue and Glenview Drive. Line 132 is part of PG&E's gas transmission system feeding the San Francisco Peninsula up to the City of San Francisco, primarily including San Mateo, Santa Clara and San Francisco counties. Line 132 begins at the Milpitas Terminal, a pressure regulating facility, and terminates at the gas load center near Potrero Power Plant in San Francisco.

Segment 180 was a 30-inch diameter Double Submerged Arc Welded (DSAW) pipe (incorrectly identified in PG&E's records as seamless) with a 0.375 inch wall thickness and various yield strengths. The external corrosion coating on the pipeline was hot applied asphalt. The segment was constructed in 1956 to accommodate new grading in the vicinity of the existing Line 132.

Line 132 has a Maximum Allowable Operating Pressure (MAOP) of 400 psig. However, at the time of the incident, Line 132 was connected through open crossties with Line 109 which has an MAOP of 375 psig. Therefore, the effective MAOP of Line 132, including Segment 180, was 375 psig.

The incident was preceded by maintenance activity at the Milpitas Terminal. The Milpitas Terminal receives gas from Texas and the Rocky Mountain Area and distributes it into 8 pipelines (Line 100, 101, 109, 132 and 0805-01).

At 2:46pm on September 9, clearance to replace an Uninterruptable Power Supply (UPS) at the Milpitas Terminal was initiated. During the installation of the UPS, power was lost to the Supervisory Control and Data Acquisition (SCADA) system, resulting in loss of some information and control over various pipelines at the Milpitas Terminal.

This, in turn, caused various regulating valves to fully open as designed. Gas pressure in lines leaving the Milpitas Terminal, including Lines 101, 109 and 132 increased. According to telemetry data obtained during the investigation, the pressure on Line 132 leaving the Milpitas Terminal reached 396 psig as measured manually. The highest pressure recorded at an upstream location closest to Segment 180 just prior to the failure was determined to be 386 psig. Based on a review of historical pressure data, this was the highest pressure Segment 180 had experienced within the seven years preceding the rupture. The previous maximum pressure was 382.98 psig at 7:00pm in December 2003.

Energy released from the rupture created a crater about 72 feet long by 26 feet wide. A 28-foot long section of pipe weighing approximately 3,000 pounds was ejected from the crater and landed approximately 100 feet from the crater in the middle of Glenview Drive.

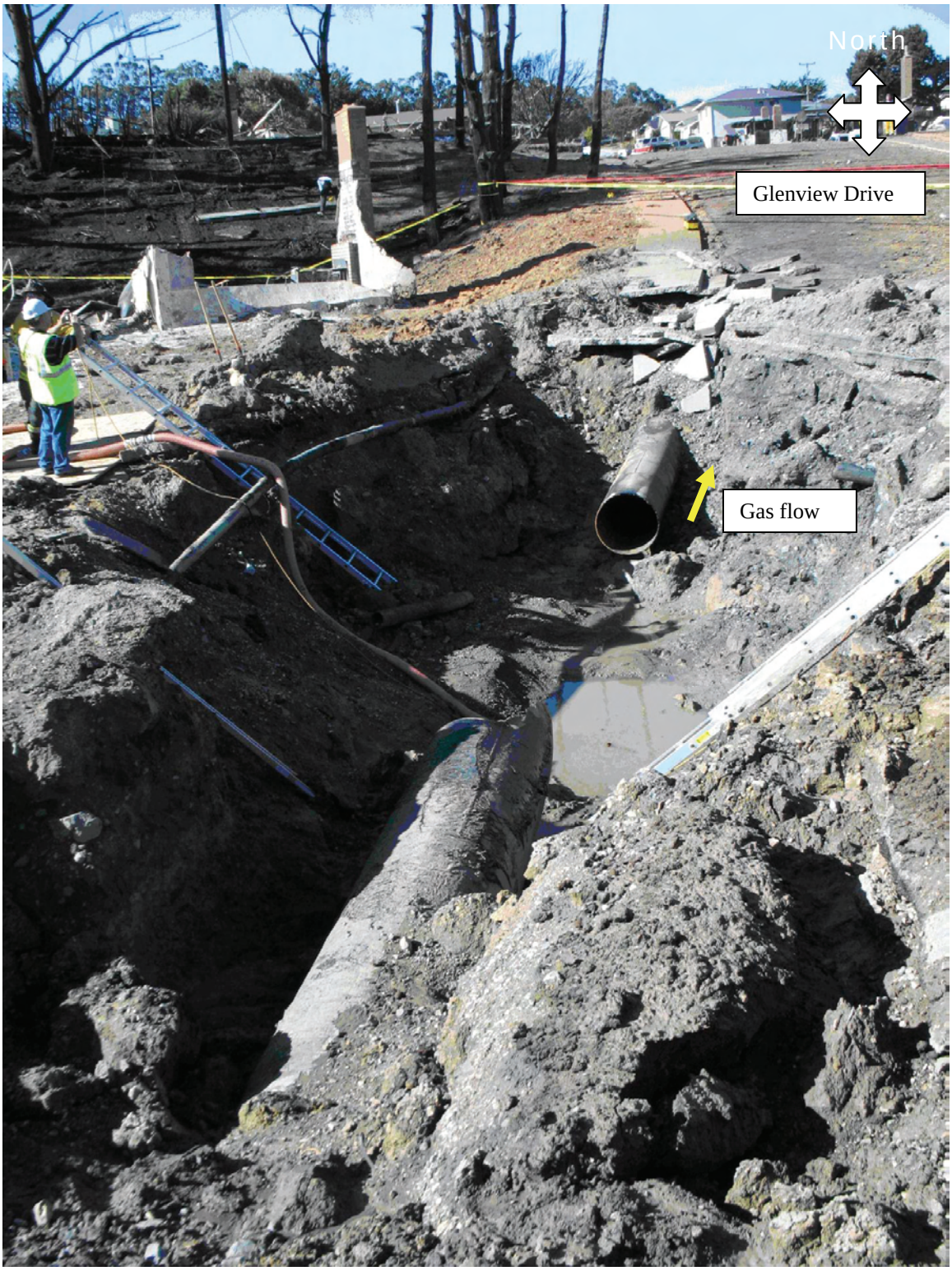

Figure III-1

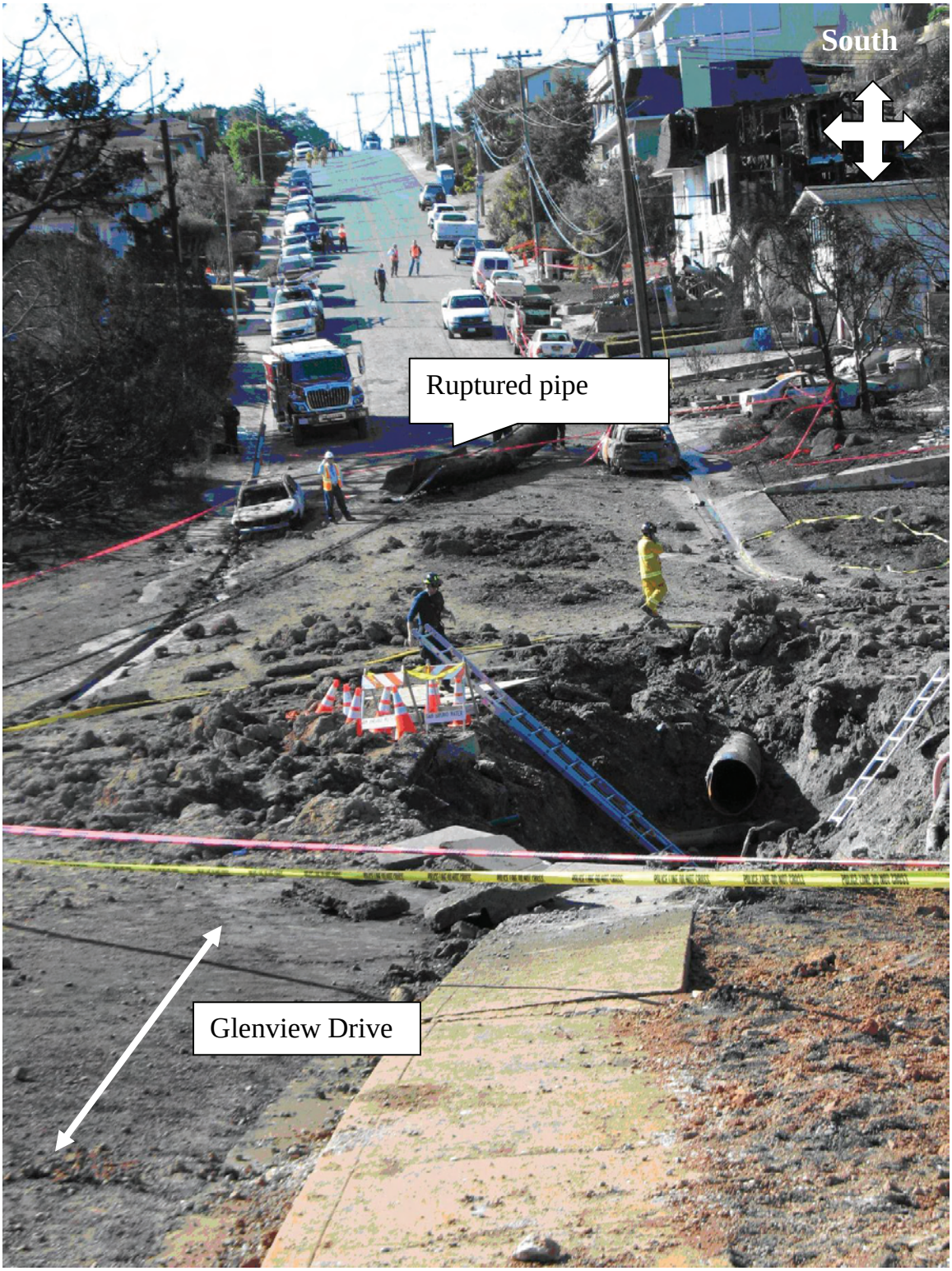

Figure III-2

The following is a timeline of the events that occurred on September 9, 2010.

4:03pm	Work began on the UPSs at the Milpitas station.
4:18pm	SCADA center lost SCADA data for pressures, flows, and valve positions at the Milpitas Terminal.
4:20pm	SCADA started detecting alarms at Milpitas.
4:32pm	Alarms were cleared at Milpitas station.
5:22pm	The SCADA center alarm console displayed over 60 alarms within a few seconds, including controller error alarms and high differential pressure and backflow alarms from the Milpitas Terminal. These alarms were followed by pressure alarms on several lines leaving the Milpitas Terminal, including Line 132.
5:28pm	Employees suspected that regulating and/or station bypass valves had opened.
5:42pm	The decision to drop the local set point of the monitor valves from 386 to 370 psig to bring down the line pressures was approved.
6:04pm	Incoming lines at the Milpitas Terminal were lowered to 370 psig. High-high pressure alarms continued to appear in the SCADA system until just after the rupture.
6:11pm	SCADA data indicated that a rupture had occurred when pressures on Line 132 upstream of Martin station rapidly decreased from a high of 386 psig. The first 911 call was also made at this time.
6:12pm	The first police unit arrived on scene. SCADA showed upstream pressure at Martin Station on Line 132 had decreased from 361.4 psig to 289.9 psig.
6:13pm	The first San Bruno Fire Department unit arrived on scene.
6:18pm	An off-duty PG&E employee notified the PG&E dispatch center in Concord, California, of an explosion in the San Bruno area. Over the next few minutes, the dispatch center received additional similar reports.
6:23pm	PG&E dispatch sent a Gas Service Representative (GSR) working in Daly City (about 8 miles from San Bruno) to confirm the report. About the same time, PG&E's Senior Distribution Specialist who saw the incident fire while driving home from work, reported the fire to the PG&E dispatch center and proceeded to the incident scene.
6:35pm	A Measurement and Control (M&C) Mechanic (Mechanic 1) saw media reports about the fire. He notified the PG&E dispatch center and

	proceeded to the PG&E Colma yard. Another M&C Mechanic (Mechanic 2) called to check on him and also headed to the Colma yard.
	Meanwhile, M&C Superintendent of the Bay Area learned of the explosion and fire through media reports, notified the SCADA center, and proceeded to the accident site.
6:41pm	The Senior Distribution Specialist arrived on scene with the GSR. The M&C superintendent of the Bay Area arrived soon after.
6:48pm	The Senior Distribution Specialist called the PG&E dispatch center to request that gas and electric crews respond to the scene.
6:50pm	Mechanic 1 arrived at the Colma yard and Mechanic 2 arrived shortly after.
6:55pm	The PG&E operations emergency center in San Carlos was activated.
7:06pm	Mechanic 1 recognized the rupture as occurring in Line 132 and called the Peninsula Division Transmission and Regulation (T&R) Supervisor to tell him he was going to isolate the rupture. The Supervisor authorized the action. The two PG&E mechanics left the Colma yard, driving toward the first mainline valve (at MP 38.49) that they planned to close. They were joined en route by San Francisco (SF) Division T&R Supervisor.
7:20pm	The two PG&E Mechanics and the SF Division T&R Supervisor arrived at the first valve location.
7:22pm	The Senior Distribution Specialist contacted the PG&E dispatch center to convey that, although it was still unconfirmed, the incident was likely a reportable gas fire. Within minutes, the dispatch center relayed the information to the SCADA center. The SCADA center confirmed that Line 132 was involved.
7:27pm	The SF Division T&R Supervisor requested that the SCADA center close two valves at the Martin Station.
7:29pm	A PG&E Gas Operator remotely closed the valves at Martin Station downstream of the rupture to stop the gas flow from north to south.
7:30pm	The two Mechanics manually closed the mainline valve (at MP 38.49) south (upstream) of the rupture, stopping the gas flow at that location.
7:46pm	The two Mechanics, with some assistance from the SF Division T&R Supervisor, manually closed two more valves downstream of the rupture (at MPs 40.05 and 40.05-2) at Healy Station. Closing the valves isolated the ruptured section of pipe.
7:52pm	The two Mechanics closed the valve at District Regulation Station 190 at Glenview Avenue and San Bruno Avenue to prevent back-feed into Line 132.

11:32pm Additional PG&E crews manually closed two distribution line valves and squeezed three more distribution lines to stop the gas-fed house fires surrounding the pipeline rupture.

By early morning on September 10, firefighters declared 75% of all active fires to be contained. By the end of the day on September 11, 2010, fire operations continued to extinguish fires and monitor the incident area for hot spots and then transferred incident command to the San Bruno Police Department.

During the 50 hours following the incident, about 600 firefighting (including emergency medical service) personnel and 325 law enforcement personnel responded. Fire crews and police officers conducted evacuations and door-to-door searches of houses throughout the response. In total, about 300 homes were evacuated. Firefighting efforts included air and forestry operations. Firefighters, police officers, and members of mutual aid organizations also formed logistics, planning, communications, finance, and damage assessment groups to orchestrate response efforts and assess residential damage in the accident area.

An investigation of the incident was conducted by a team led by the NTSB. The team included representatives from the California Public Utilities Commission, Pacific Gas and Electric Company, the Pipeline and Hazardous Materials Safety Administration, the City of San Bruno, the Engineers and Scientists of California Local 20, and the International Brotherhood of Electric Workers Local 1245.

The NTSB team's metallurgical examination and testing determined that the rupture occurred at a defective seam weld of substandard yield strength. Over time, the defect in the seam weld grew resulting in the rupture.

A. Pre-Incident Gas Odor Complaints

On September 10, 2010, the CPUC established a toll-free number and an email address for anyone who had information on a natural gas smell in the San Bruno area in the weeks before September 9, 2010. CPSD prepared a report that investigated any gas odor complaints contained in the Commission's complaint database, the hotline, USRB's complaint records, PG&E's complaint database, the internet, interviews of complainants,

and the San Bruno Fire Department. A copy of CPSD's report on pre-incident gas odor complaints is available on the CPUC's website. Staff's investigation revealed that although PG&E received complaints regarding gas odor/leak from San Bruno and its neighboring areas prior to the explosion, complainants and PG&E records confirm that PG&E responded to these complaints by dispatching its crews to resolve the issues. Staff was unable to identify the existence of specific complaints, reported to PG&E or the Commission prior to the explosion, that directly originate at the site of the explosion or are related to the explosion itself.

IV. Construction of Failed Pipe Section

A. Summary

In 1956, when PG&E constructed the section of pipe that failed in San Bruno, it did not follow accepted good industry practice existing at the time. PG&E's failure to identify deficiencies in pipe manufacturing through inspection and testing at the time of construction resulted in the installation of defective pipe in the ground. PG&E violated Public Utilities Code Section 451 by installing and operating its system in an unsafe manner.

B. Description of Line 132

PG&E's Peninsula transmission system consists of three transmission lines: Line 101, Line 109, and Line 132 with cross-ties between the three lines along their full length to allow flow of gas between the transmission lines. The transmission lines all originate at the Milpitas terminal which is located south of San Francisco and about 39 miles southeast of the accident site. Natural gas flows through all three transmission lines from south to north terminating at PG&E's gas load center, near the Potrero Power Plant in San Francisco, which is located approximately 46 miles north of the Milpitas terminal.

Line 132 was constructed in multiple phases from 1944 through 1948 and consists of 22-inch, 24-inch, 30-inch, 34-inch, and 36-inch diameter segments located in various lengths of the pipeline.

C. Description of Segment 180

The segment of Line 132 that ruptured in San Bruno is called Segment 180. Segment 180 was installed in 1956 as part of a relocation project of approximately 1,851 feet of Line 132 that had been originally constructed in 1948. The relocation of Segment 180 started north of Claremont Drive and extended south of San Bruno Avenue and moved the pipeline from the east side to the west side of Glenview Drive. This relocation was necessary because of grading associated with land development in the vicinity of the existing pipeline. The construction was performed by PG&E personnel. To date, no documents showing specifications for this segment have been located.

Segment 180 was originally documented in PG&E records as being 30-inch diameter seamless steel pipe with a 0.375 inch wall thickness and having a Specified Minimum Yield Strength (SMYS) of 42,000 psi, installed in 1956 (see the records section of this report). After the San Bruno incident, it became apparent that the pipe was DSAW pipe containing a longitudinal weld, and not seamless pipe. PG&E reported to the NTSB that the material specification information for Segment 180 had been obtained from accounting records rather than engineering records. Also, it was later determined that the SMYS for most of the segment was 52,000 psi.

The NTSB discovered after the incident that there were six short lengths of pipe known as “pups” in the area of the rupture that included the origin of the fracture as indicated in Figure IV-1. The pups were welded together with girth welds (indicated as GW1 through GW7 in the figure). The pups ranged from 3.5 to 4.7 feet in length.

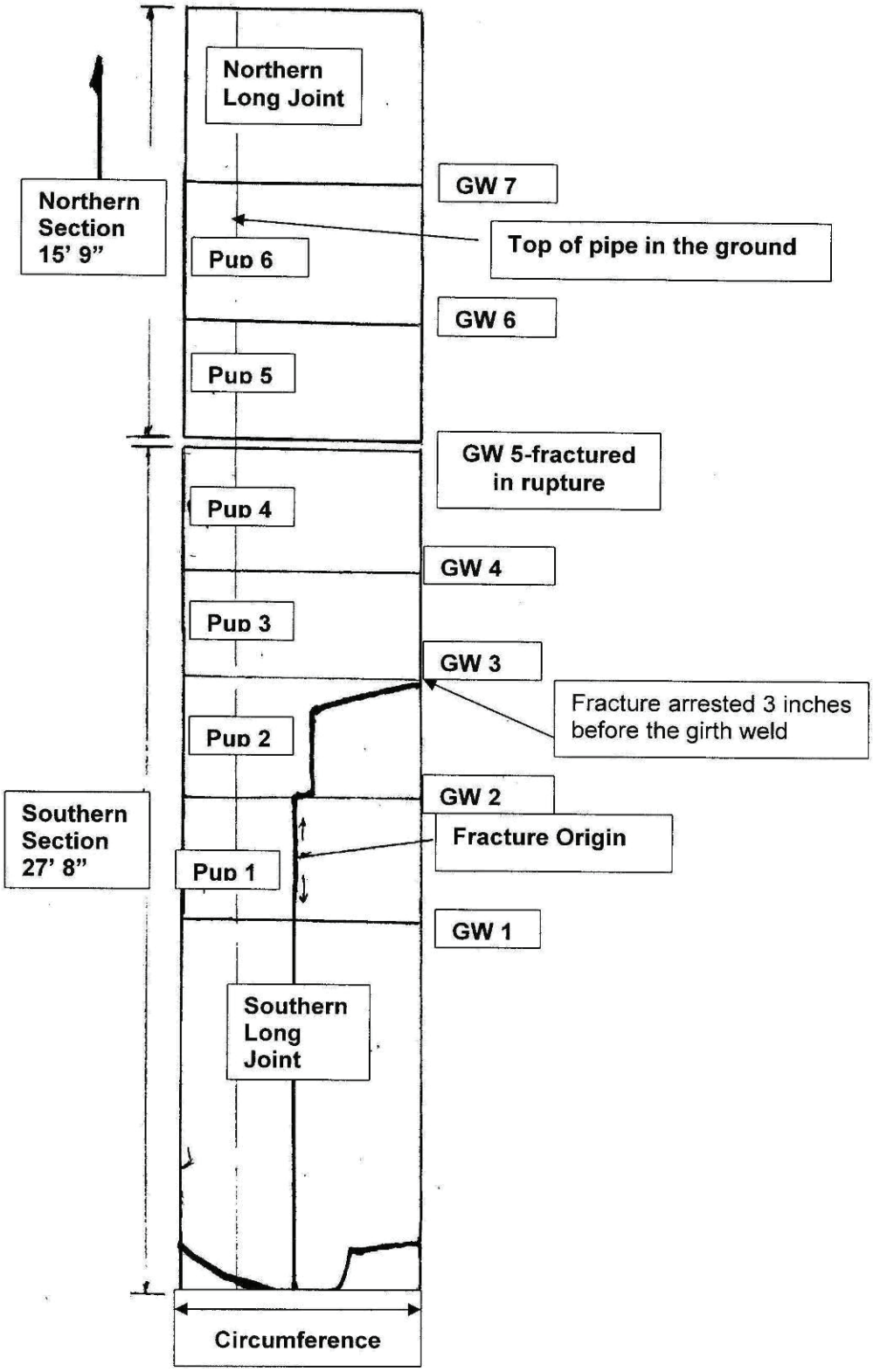
Northern Long Joint
Northern Section 15' 9"
GW 7
Top of pipe in the ground
Pup 6
GW 6
Pup 5
GW 5-fractured in rupture
Pup 4
GW 4
Pup 3
GW 3
Fracture arrested 3 inches before the girth weld
Pup 2
GW 2
Southern Section 27' 8"
Fracture Origin
Pup 1
GW 1
Southern Long Joint
Circumference

Figure IV-1

D. Regulations and Industry Standards Applicable in 1956

At the time Segment 180 was constructed in 1956, the Commission had jurisdiction over the safety of PG&E natural gas facilities but there were no specific federal or state safety regulations applicable to transmission line construction. However, there were standards established by ASME which the industry developed and followed.

1. ASA B31.1.8-1955 Background

In March 1926, under the sole sponsorship of the American Society of Mechanical Engineers, the American Standards Association (ASA) initiated Project B31 to address the need for a national code for pressure piping during that period. After several years of work by the sectional committees and subcommittees, a first edition was published in 1935 as an American Tentative Standard Code for Pressure Piping.

A revision of the tentative standard began in 1937 to secure uniformity between sections and eliminate divergent requirements and discrepancies. This revision also moved the code abreast of current developments in welding technique and stress computations, and added references to new dimensional and material standards. This resulted in the 1942 American Standard Code for Pressure Piping.

Because of the wide fields involved, various engineering societies, trade associations, government bureaus, institutes and the like were actively involved and had one or more representatives on the sectional committees to represent general interests. As a result, code activities had been subdivided according to scope. In 1948, a review of the 1942 standard resulted in a general revision and extension of requirements to meet present day practice and to clarify ambiguous or conflicting requirements. In February of 1951, the project was designated as an American Standard referred to as B31.1-1951.

On November 29, 1951, a separate publication of a section of the Code for Pressure Piping dealing with gas transmission and distribution was approved which combined applicable parts of different sections of the 1951 edition. The purpose was to provide an integrated document for gas transmission and distribution piping that would not require cross-referencing to other sections of the Code. The first edition of this integrated document known as American Standard Code for Pressure Piping, Section 8,

Gas Transmission and Distribution Piping Systems, was published in 1952. A new subcommittee was formed to take over responsibility for this section of code. A second edition of the American Standard Code for Pressure Piping, Section 8, Gas Transmission and Distribution Piping Systems was published in 1955 (ASA B31.1.8-1955).

ASA B31.1.8-1955 was the pipeline industry standard during the construction of Segment 180 of Line 132 in San Bruno in 1956.

2. ASA B31.1.8-1955 Applicable Requirements

ASA B31.1.8-1955 established detailed requirements for pipe materials, welding, fabrication, installation, testing, operation and maintenance. It also adopted API standards for pipe material specifications. ASA B31.1.8-1955 contained requirements covering:

- Determination of wall thickness
- Determination of yield strength based on American Petroleum Institute (API) standards
- Hydrostatic testing for new and used pipe and recordkeeping associated with the testing
- Cleaning pipe from inside and outside and visually inspecting it to discover defects
- Welder qualifications and testing of welds

As shown in the following sections, PG&E failed to comply with the ASA B31.1.8-1955 requirements when it installed the section of pipe which ruptured in San Bruno.

E. Failed Pipe Section Deficiencies Identified by NTSB

1. Yield Strength

NTSB metallurgical examination determined that yield strength values of all six pups were lower than 52,000 psi, which is the designated yield strength for the sections of Segment 180. Table IV-1 shows the yield strength of the pups.

Table IV-1 Yield Strength of Pups 1 through 6

Sample	Yield Strength (psi)
Pup 1	36,600
Pup 2	32,000
Pup 3	34,900
Pup 4	48,300
Pup 5	38,500
Pup 6	50,500

As can be seen from Table IV-1, Pup 1, the failed pup on which the facture initiated, was found to have yield strength of only 36,600 psi and Pup 2 had the lowest yield strength of 32,000 psi.

According to Section 805.54 of ASA B31.1.8-1955 specified minimum yield strength is the minimum yield strength prescribed by the specification under which pipe is purchased from the manufacturer. SMYS values shown in Table IV-2, are specified in Section 8 of ASA B31.1.8-1955, Appendix C, for steel pipe.

Table IV-2 SMYS values per specification

Specification	SMYS (psi)
API 5LX Grade X42	42,000
API 5LX Grade X52	52,000

Although PG&E records showed that Segment 180 was manufactured in accordance with API 5LX Grade X52 specifications, none of the pups in the ruptured section of Segment 180 met the minimum yield strength requirements of API 5LX Grade X52 and only Pups 4 and 6 met the minimum yield strength values required by API 5LX Grade X42 specified in ASA B31.1.8-1955.

2. Welding

Longitudinally, Pups 1, 2 and 3 were partially welded on the seam from the outside and the weld did not penetrate through the inside of the pipe. No inside weld, required for a DSAW welded pipe, was found on the inside of the pipe. According to the NTSB metallurgical examination, the fusion welding process left an unwelded region

along the entire length of each seam, resulting in a reduced wall thickness. PG&E failed to measure the wall thickness to determine compliance with the minimum wall thickness in accordance with Section 811.27 of ASA B31.1.8-1955.

NTSB examination also found that the girth welds associated with the pups had deficiencies related to incomplete fusion, burnthrough, slag inclusion, crack, undercut, excess reinforcement, porosity defects and lack of penetration. The girth welds of the pups did not meet the requirements of Section 811.27 E Weldability of ASA B31.1.8-1955 which required the welds be done by a qualified welder and tested in accordance with requirements of API Standard 1104.

3. Fabrication

The NTSB investigation found that the steel used for the pups had been rolled in a direction opposite to what would be expected for full lengths of pipe manufactured in a pipe mill. The NTSB investigation determined that the section of pipe which included the six pups was not consistent with mill-produced pipe capable of meeting the requirements of industry pipe specifications. Furthermore, API specifications required the minimum length of each joined pipe sections to be at least five feet in length, but none of the pups met the minimum length requirement

Table IV-3 shows the average chord lengths of the pups that were tested by the NTSB.[3]

Table IV-3 Average chord lengths of Pups 1 through 6.

Pipe Piece	Average Chord Length (inch)
Pup 1	44.5
Pup 2	45.25
Pup 3	45.97
Pup 4	46.85
Pup 5	42.94
Pup 6	55

[3] NTSB test results Metallurgical testing, Group Chairman Factual Report, January 21, 2011, Table 2 (Docket No. SA-534, Exhibit No. 3-A).

PG&E stated that starting from 1954, PG&E pipe specifications were based on API 5LX, Section VI, Dimensions, Weights, and Lengths for High Test Line Pipe which required that no length used in making a jointer shall be less than 5 ft. Jointers are defined as two pieces joined by welding. As can be seen from Table IV-3, all of the pups used for Segment 180 were less than 5 ft. PG&E did not meet the minimum length requirement of API 5LX standard when the pups were installed in 1956.

F. Strength Testing

PG&E was unable to produce records demonstrating that a strength test was performed on Segment 180 at the conclusion of its construction, and before the segment was placed in operation. Based on the pipeline characteristics associated with the six pups, it is clear that, if a strength test that conformed to industry standards had been performed, it would have failed.

ASA B31.1.8-1955 specified detailed requirements for strength testing. Section 841.411 of ASA B31.1.8-1955 required that "All pipelines and mains to be operated at a hoop stress of 30% or more of the specified minimum yield strength of the pipe shall be given a field test to prove strength after construction and before being placed in operation."

Section 841.417- Records requirements of ASA B31.1.8-1955 further stated the following: "The operating company shall maintain in its file for the useful life of each pipeline and main, records showing the type of fluid used for test and the test pressure."

PG&E was unable to produce records showing that pipe in Segment 180 had been strength tested and therefore failed to follow ASA B31.1.8-1955 strength testing requirements.

G. MAOP

According to PG&E, the MAOP for the failed segment was 400 psig. This MAOP was established using the grandfathering clause (see below).

1. ASA B31.1.18-1955 MAOP Requirements

ASA B31.1.8-1955 Section 845.22 contained the requirements for establishing the MAOP for pipelines. For a pipeline in good operating condition, the MAOP was defined as the lesser of the design pressure of the weakest element of the pipeline or main or the pressure obtained by dividing the pressure to which the pipeline was strength tested after construction by the designated factor for the class location for the pipeline. PG&E did not follow ASA B31.1.8-1955 when it initially established the MAOP for the failed segment.

2. Grandfathering Clause

In 1961, the Commission adopted General Order 112. The initial order, known as the "Rules Governing Design, Construction, Testing, Maintenance and Operation of Utility Gas Transmission and Distribution Piping Systems", generally adopted ASA B31.8-1958, a later version of ASA B31.1.8-1955 with some modifications. General Order 112, Section 209 contained the strength testing requirements for pipelines. However, the strength requirements of General Order 112 applied only to new construction and did not apply to existing pipelines.

In 1970 the Department of Transportation issued Title 49 Code of Federal Regulations Part 192 which contained minimum federal safety standards for transportation of natural and other gas by pipeline. Effective April 30, 1971, the Commission adopted General Order 112-C which combined then General Order 112-B with Part 192. Title 49 CFR Part 192 Subpart J contained the pressure testing requirements for new pipe segments installed, relocated or replaced. Again, these requirements were not retroactive and only applied to new construction.

For pipelines installed prior to code, Part 192.619(a)(3) contained a requirement that became known as the grandfathering clause. This clause specified that the MAOP for existing lines may not exceed the highest actual operating pressure to which the segment was subjected during the 5 years preceding 1970.

PG&E provided a pressure log from the Milpitas Terminal dated October 16, 1968 showing a recorded pressure of 400 psig for Line 132.[4] This pressure log was used by PG&E as the basis for establishing an MAOP of 400 psig for Line 132.

Because of its connection at the time of the incident to Line 109, which has an MAOP of 375 psig, the resultant MAOP of Line 132 was 375 psig. During conditions in which the primary pressure regulating device fails, Part 192.201(a)(2)(i) requires that the pressure in a transmission pipeline not exceed the MAOP + 10%. At the time of the incident, the pressure on line 132 did not exceed the maximum pressure allowed by code.

[4] NTSB Exhibit 2C.

V. Integrity Management

A. Background

The integrity management requirements for all pipelines in HCAs (high consequence areas as defined in Part 192.903) were effective with the signing into law of the 2002 Pipeline Safety and Improvement Act on December 17, 2002. This law required PHMSA to promulgate regulations concerning transmission pipelines in areas that could affect human safety no later than one year after enactment. PHMSA noticed the new regulations on December 15, 2003, and these regulations had the following requirements with regard to Integrity Management (IM) plans.

- No later than December 17, 2004, operators were to have IM plans developed and to have identified all HCAs.
- No later than December 17, 2007, operators were to have initially assessed 50% of the HCA segments by mileage, beginning with the highest risk segments.
- No later than December 17, 2012, operators were to have initially assessed all of their pipelines in HCAs.

The regulations referenced sections of ASME B31.8S-2001 and all of NACE RP0502-2002; these two standards became essentially part of the regulation. Requirements for threat analysis, risk ranking, assessment methods and re-assessment timetables were also included in the regulations and as part of the referenced standards. The 2002 act also mandated that, for time dependent threats (external corrosion and internal corrosion), the maximum re-assessment period was seven years from the completion of the initial or baseline assessment.

B. Summary

The investigation found that PG&E did not comply with certain integrity management requirements in the federal pipeline safety regulations. Significant deficiencies were found in data gathering and integration, threat identification, risk assessment and assessment.

There were a number of deficiencies in PG&E's data gathering and analysis process that resulted in a flawed understanding of Line 132 HCA[5] segments. First, PG&E failed to gather all relevant leak data on Line 132 and integrate it into its Geographic Information System (GIS). The failure to gather and integrate data is a violation of Part 192.917(b). Second, PG&E did not ensure that only conservative default values were chosen on Line 132, or that the data was sufficiently checked for accuracy. The failure to use conservative default values and adequately check the accuracy of the data is a violation of ASME B31.8S, Section 5.7(e). Third, per the Ntsb Report, PG&E did not consider known longitudinal seam cracks dating to the 1948 construction and at least one other leak, which occurred in 1988, on a long seam of the 1948 portion of pipe. Therefore, PG&E is in violation of Part 192.917(b) for not sufficiently evaluating these known longitudinal seam defects to determine the potential for manufacturing defects on other similar segments.

PG&E also failed to identify the unstable manufacturing threat on Line 132 segments, which resulted in an improper assessment method being used on Segments 180 and 181 (and other segments). Had PG&E properly identified the threat of potentially unstable manufacturing defects, it would have been required to use an assessment technology capable of assessing this threat. Had PG&E hydro-tested Segment 180, it is highly probable that one of the defective pups would have failed. PG&E also failed to incorporate Part 192 requirements for analyzing cyclic fatigue and other loading conditions into its threat assessment of Line 132. Therefore, PG&E violated sections Parts 192.917(e)(2) and 192.917(e)(3).

A number of deficiencies in PG&E's risk ranking algorithm likely resulted in a flawed risk ranking. PG&E violated Part 192.917(c) and requirements of AMSE B31.8S, Section 5, which is incorporated into Part 192.917(c) by reference.

During the assessment phase, for segments where manufacturing defects became

[5] See http://ecfr.gpoaccess.gov/cgi/t/text/text--dx?c=ecfr&sid=c9f751fb42f233e313f29f5c41574534&rgn=div8&view=text&node=49:3.1.1.1.8.15.9.2&

potentially unstable, PG&E should have used an assessment technology capable of detecting these defects. PG&E violated Part 192.921(a) which requires the proper method of assessment for threats on a segment.

Selected steps, including data gathering and integration, threat identification, risk assessment and assessment from the Integrity Management process for Line 132, segments 180 and 181 are discussed below. These selected steps include those where the investigation found violations of the regulations associated with the integrity management process, including violations of 49 CFR Part 192 Subpart O, ASME-B31.8S.

C. Data Gathering and Integration

1. Requirements for Data Gathering and Integration

Potential threats to the integrity of Line 132 pipeline segments could only be identified through a detailed and thorough knowledge of each covered segment. The requirements for data gathering and integration are stated in Part 192.917(b) and ASME B31.8S, Section 4, which is incorporated by reference in 49 CFR Part 192. Part 192.917(b) states:

> **Data gathering and integration.** To identify and evaluate the potential threats to a covered pipeline segment, <u>an operator must gather and integrate existing data and information on the entire pipeline that could be relevant to the covered segment</u>. In performing this data gathering and integration, an operator must follow the requirements in ASME/ANSI B31.8S, section 4. At a minimum, an operator must gather and evaluate the set of data specified in Appendix A to ASME/ANSI B31.8S, and consider both on the covered segment[6] and similar non-covered segments, past incident history, corrosion control records, continuing surveillance records, patrolling records, maintenance history, internal inspection records and all other conditions specific to each pipeline. [Emphasis added.]

---

idno=49

[6] A covered segment is one that meets the definition of a High Consequence Area (HCA).

ASME-B31.8S speaks to the requirement for a thorough data gathering and integration process. "A survey of all potential locations that could house these records may be required to document what is available..."[7]

Section 4 of ASME B31.8S also requires that if an operator does not have sufficient data or where data quality is below requirements, an operator must follow the prescriptive processes in Appendix A.[8] PG&E uses the prescriptive process. There are nine appendices with minimum data gathering requirements for the following threats: internal corrosion, external corrosion, stress corrosion cracking, manufacturing threat (i.e., pipe seam and pipe defects), construction threat (i.e., pipe girth welds, fabrication welds, wrinkle bends or buckles, miter joints, striped threads/ broken pipe/ couplings), equipment threat (i.e., gaskets and o-rings, control/relief valves, seal pump packing), third party damage threat, incorrect operations threat, and weather-related and outside force threat. In addition to these nine threats, both ASME B31.8S and Part 192.917(e)(2) mandate that operators such as PG&E must consider both cyclic fatigue and the interactive nature of some threats. When data is missing from the minimum data sets identified in Appendix A, the threat is assumed to exist.[9] In addition, where there is missing data, "conservative assumptions should be used."[10] A summary of the data needed for the prescriptive Integrity Management plan is contained in Table 1 of ASME-B31.8S. Not all data from Table 1 may be applicable to each threat.

a) Data Quality and Accuracy

Data quality and accuracy is of fundamental importance in any analysis of the potential threats to a pipeline segment. Inaccurate data could result in erroneous threat identification, inputs into the threat algorithms, and a flawed risk ranking analysis

---

[7] ASME B31.8S, Section 4.3, page 9.

[8] *Id*., Section 4.1, page 8.

[9] *Id*., Section 4.2.1, page 9.

[10] *Id*., Appendix A, similar language is in most of the appendices A1-A9, excluding A7 and A8: "Where the operator is missing data, conservative assumptions shall be used when performing the risk assessment or, alternatively, the segment shall be prioritized higher."

(discussed more below). One of the main tools used by PG&E for analyzing data is its GIS, which contains data in a graphical format. It is a format that overlays data on top of a map of the pipeline system. With reference to data quality, ASME B31.8S states:[11]

> **Risk Confidence.** Any data applied in a risk assessment process shall be verified and checked for accuracy.

b) Data Integration for Covered and Similar Non-covered Segments

49 CFR Part 192.917(b) also requires that relevant data from covered pipeline segments and data from non-covered pipeline segments that are similar[12] to the segments under evaluation be reviewed and that such data is used in determining the potential threats to the covered segment.

ASME-B31.8S, Section 4.4 requires that "A plan for collecting, reviewing, and analyzing the data shall be created and in place from the conception of the data collection effort." Section 4.5 also states, "Individual data elements shall be brought together and analyzed in their context to realize the full value of integrity management and risk assessment."

2. Deficiencies in PG&E's Process for Data Gathering and Integration

Risk Management Procedure 06 (RMP-06) is the central document that is the foundation of PG&E's Integrity Management process. Other RMPs add detail to the process; for example, RMP-01 defines the process for calculating risk. The process for data gathering and integration is covered in Section 2 of RMP-06, Revision 0. Data gathering and integration in RMP-06 is summarized in Section 2.3, page 18. The summary states:

---

[11] *Id.*, Section 5.7, page 14.

[12] "Similar" means pipelines of similar materials, manufacturer, installation techniques, coatings, environment, etc.

The overall process by which the Company has chosen to comply with these requirements consists of the following steps:

- Gather data
- Review data
- Integrate data to understand the condition of the pipe.

c) Deficiencies in Step 1 (Gather Data)

Under the heading, "Data Elements Selected for Initial Analysis," PG&E states:[13]

> For the risk analysis process, the Company has chosen pipeline attributes based upon available, verifiable information or information that can be obtained in a timely manner. [Emphasis added.]

This policy is contrary to the requirements in Part 192.917(b) and ASME-B31.8S, and suggests that a thorough data gathering and integration was not performed, and as a result, an in-depth understanding of the threats on Line 132 and Segment 180 was not achieved. One example is the failure to gather all data on leaks as cited in the NTSB Report. As noted in that report:

> When questioned about the leak data, PG&E stated that when it transitioned to its GIS in the late 1990s, only open (that is, unresolved) leak information was transferred. Closed leak information—such as the October 27, 1988, leak, which had been repaired—was not transferred to the GIS. This situation suggests that additional leaks from the time prior to the late 1990s may not be not reflected in the GIS and thus not be considered as part of the risk assessment for the affected segments, despite PG&E's stated intent to include leak history in its inventory of pipeline attributes.[14]

d) Deficiencies in Step 2 (Review Data)

Although ASME-B31.8S incorporates the possibility that incomplete information will be available, a company is required to make conservative assumptions where data is

[13] CPUC_218-01Atch01-CONF RMP-06, Rev. 0, Section 2.4—Gather Data, page 22.

[14] NTSB Report, Section 2.6.1, page 109-110.

not available, and depending on the importance of the data, the company may need to take further actions, such as digging up the pipe and conducting tests, to gather this data.[15]

As identified in ASME B31.8S, "For missing or questionable data, the operator should determine and document the default values that were chosen and why they were chosen. The operator should choose default values that conservatively reflect the values of other similar segments..."[16] In line with this requirement, Section 2.5 of RMP-06, Rev. 6 states: "In accordance with ASME B31.8S Appendix A, Section 4.2, where data is missing, conservative assumptions are used when performing risk assessment."[17] However, as identified in the NTSB report on the San Bruno incident, there were multiple examples where PG&E did not use conservative assumptions.[18] These examples include: (1) Three different values for the SMYS of Grade B steel were used – 35,000 psi[19] (consistent with the value given in ASME B31.1.8, 1955 edition), 40,000 psi, and 45,000 psi; and (2) Two segments with unknown SMYS were assigned non-conservative values of 33,000 psi and 52,000 psi although Part 192.107(b)(2) requires a conservative value of 24,000 psi when the exact SMYS of a pipe segment is not known or documented.

As part of the process defined in RMP-06,[20] PG&E identifies requirements for reviewing the quality and consistency of the data. RMP-06, Section 2.5, states:

- The quality and consistency of the data must be verified once information is collected. The following issues shall be considered as data is reviewed for impact on the analysis results.
- Data resolution and units: consistency in units must be maintained.
- Common Reference System: allows data elements from various sources to be combined and accurately associated with common pipeline locations.

---

[15] ASME B31.8S, Section 4.3, page 10.

[16] *Id.*, Section 5.7, page 14.

[17] CPUC_218-01Atch01-CONF RMP-06, Rev. 0, Section 2.5, page 22.

[18] NTSB Report, Section 1.9.4.1, page 114.

[19] PSI means pounds per square inch.

[20] This wording is in both Rev. 0 and Rev. 6.

- When possible, utilize all actual data for an HCA.
- Age of data: this is especially important to time-dependent threats.[21]

Although Section 2.5 discusses quality and consistency of data, the process was not robust enough to catch errors in the data on Line 132. The NTSB provided a number of examples where data from PG&E's GIS were in error.[22] They include:

- Six consecutive segments, totaling 3,649 feet, specified an erroneous minimum depth of cover of 40 feet;
- Several segments, including Segment 180, specified 30-inch-diameter seamless pipe, although there was no API-qualified domestic manufacturer of such pipe when the line was constructed; and
- The GIS did not reflect the presence of the six pups in Segment 180.

As noted, Segment 180 was identified as seamless, but there were other documents discovered by the NTSB that identified the pipe segment as DSAW.23 Whenever different documents provide conflicting information about a pipeline segment, the operator must verify which information is correct, or at the very least, select the most conservative value.

e) Deficiencies in Step 3 (Integrate Data to Understand the Condition of the Pipe)

As noted in the NTSB report, PG&E "did not consider known longitudinal seam cracks in Line 132 dating to the 1948 construction and at least one longitudinal seam leak in a DSAW weld in its identification and assessment procedures."[24] Data on seam leaks

[21] RMP-06, Rev. 0, Section 2.5—Review Data, page 22.

[22] NTSB Report, Section 1.9.4.1, page 61.

[23] *Id*., Section 1.7.2, page 27.

[24] Id., Section 2.6.4, page 61.

or test failures for 1948-2011 is summarized in Table 2 of that report.[25] Table 2 is reproduced below.

Year Found	Line	Pipeline Diameter (inches)	Description
1948	132	30	Multiple longitudinal seam cracks found during radiography of girth welds during construction
1958	300B	34	Seam leak in DSAW pipe
1974	300B	34	Hydrostatic test failure of seam weld with lack of penetration (similar to accident pipe)
1988	132	30	Longitudinal seam defect in DSAW pipe
1992	132	30	Longitudinal seam defect in DSAW weld when a tie-in girth weld was radiographed
1996	109	22	Cracking of the seam weld in DSAW pipe
1996	109	22	Seam weld with lack of penetration (similar to accident pipe) found during camera inspection
1996	DFM-3	--	Defect in forge-welded seam weld
1999	402	16	Leak in ERW seam weld
2011	300A	34	Longitudinal seam crack in 2-foot pup of DSAW pipe (found during camera inspection)
2011	153	30	Longitudinal seam defect in DSAW pipe during radiographic inspection for validation of seam type

Figure V-1 Reproduction of Table 2 of the report of the NTSB's investigation and findings in the San Bruno Incident.

PG&E's failure to analyze the data on the 1948 Line 132 DSAW weld defects resulted in an incomplete understanding of this manufacturing threat as it applied to Line 132. Findings of particular importance from Figure V-1 and the NTSB analysis are the longitudinal seam weld defects discovered during radiography of girth welds during the 1948 construction. As the analysis indicates, this random 10% sampling of the girth welds captured less than 0.2% of the longitudinal welds, yet found five welds that were rejected. The 10% sampling of girth welds also found 10 girth welds that were rejected. Two other DSAW weld defects include a 1988 DSAW seam leak and a 1992 DSAW leak.

During CPSD's review of various Line 132 segments, records produced by PG&E in response to CPSD and NTSB data requests identified manufacturing and construction

[25] Id., Section 1.7.6, page 39.

defects, including defects on a miter bend; and two construction defects that were not reflected in the 2004 revision of the Baseline Assessment Plans (BAP) because PG&E's threat algorithm did not incorporate them.[26] These are listed in Table V-2 below. The first leak listed in the table was found in 1964 on a "wedding band"[27] joint. As noted in the NTSB report, this type of weld is not an element in any threat algorithm even though this type of joint *"is not as strong as a full penetration butt weld."*[28] PG&E's 2004 BAP did not identify a construction threat on this segment. The second leak identified in the table was found during the 2002 ECDA process. The line segment where the defective miter joint was found was replaced on January 1, 2004. However, other segments of similar vintage and pipe characteristics did not identify potential construction defect or threats in the 2004 BAP (i.e., segment 143.7). The third leak in the table was found on a construction defect on a field girth weld from the 1948 construction of a Consolidated Western DSAW pipe. The fourth item in the table was a SAW defect that was discovered during the ECDA process along Line 132.

[26] A Baseline Assessment Plan is a document that provides an overview of important statistics on each HCA segment, including pipe properties, segment-specific locations and the identified threats.

[27] As defined in the NTSB Report, a wedding band "... is a short sleeve fillet welded to the outside of two adjacent pipe ends."

[28] NTSB Report, page 109.

Table V-2[29] Additional manufacturing and construction issues

Year Found	Line	Pipeline Diameter (inches)	Description
1964	132	24	A leak was found on a "wedding band" weld; the leak was the result of construction defect. The defect was found on segment 200. The 2004 BAP does not reflect any construction threat on this segment. [30]
2002	132	24	During a 2002 ECDA assessment, miter joints with construction defects were found on Segment 143.4.
2009	132	30	A leak was found on Segment 189 that was caused by a field girth weld defect.[31] Segment 189 was originally fabricated by Consolidated Western using DSAW and installed on 1-1-48.
2009	132	30	During the ECDA process, a defective SAW repair weld was found on Segment 186. As indicated in PG&E's pipeline survey sheet, the segment was originally fabricated by Consolidated Western using DSAW and installed on 1-1-48.

In addition to the manufacturing and construction defects identified above, PG&E's Long Term Integrity Management Plan (LTIMP) identified construction defects that were found during tethered device inspections of Line 109 in 1996 and 1998 to examine the girth welds. Shop fabricated miter bends within the inspected sections on Line 109 were replaced due to poor quality welds.[32] Further, this section of the LTIMP identified that shop fabricated miter bends were on lines 132, 132A and 147.

D. Threat Identification

1. Requirements for Threat Identification

Threat identification is performed for each transmission line segment and is based on data gathered and integrated in step two of the process. Part 192.917(a) states:

[29] CPUC_180-01, CPUC_180-02; CPUC_194-07Atch02-20, 07Atch08, 08Atch01-35; CPUC_197-01Atch01 (L132 ECDA Binders 2002-2010), 03Atch01 (Updated Line 132 ECDA Binders); CPUC_230-01 and NTSB_080-001-S2.

[30] CPUC_197-01.

[31] NTSB_080-001-S2.

[32] NTSB Exhibit 2W: PG&E's Long Term Integrity Management Plan under construction threat, page 8.

> **Threat identification**. An operator must identify and evaluate all potential threats to each covered pipeline segment. Potential threats that an operator must consider include, but are not limited to, the threats listed in ASME/ANSI B31.8S (incorporated by reference, see §192.7), section 2... [Emphasis added.]

ASME-B31.8S reiterates the requirement to consider all threats in an analysis of each segment.[33]

There are two types of processes described in ASME-B31.8S: A performance based process, and a prescriptive process. PG&E follows the prescriptive process. ASME B31.8S, Section 2 identifies three threat categories, with three threats in each category, plus two other threats, for a total of eleven threats.[34] The three threat categories are: (1) Time dependent, (2) Stable and (3) Time Independent. See the table below for each of the threats identified in ASME-B31.8S.

Added to the nine threats are cyclic fatigue and other loading conditions, and all other potential threats that may not be included in one of the other categories (such as unknown threats).[35] All threats need to be considered, and the plan must include justification for the elimination of a threat if data demonstrates that the threat does not exist.[36]

Also, the interactive nature of threats must be considered. ASME-B31.8S states: "The interactive nature of threats (i.e., more than one threat occurring on a section of pipeline at the same time) shall also be considered."[37] For example, a manufacturing threat on a low frequency Electric Resistance Welded (ERW) pipe might also have a threat of seam corrosion or third party damage.

---

[33] ASME B31.8S, Section 2.2, page 3 states: "All threats to pipeline integrity shall be considered."

[34] *Id.*, pages 4-5.

[35] These two additional threat categories are covered in Parts 192.917(a) and 192.917(e)(2).

[36] ASME B31.8S, Section 5.10, page 15.

[37] *Id.*, Section 2.2, page 5.

Time-Dependent	1	External Corrosion	1	External Corrosion
	2	Internal Corrosion	2	Internal Corrosion
	3	Stress Corrosion Cracking	3	Stress Corrosion Cracking
Stable	4	Manufacturing Related Defects	4	Defective pipe seam
			5	Defective pipe
	5	Welding/Fabrication Related	6	Defective pipe girth weld
			7	Defective fabrication weld
			8	Wrinkle bend or buckle
	6	Equipment	9	Stripped threads/broken pipe/coupling failure
			10	Gasket O-ring failure
			11	Control/Relief equipment malfunction
			12	Seal/pump packing failure
			13	Miscellaneous
Time-Independent (includes Human Error)	7	Third Party/Mechanical Damage	14	Damage inflicted by first, second, or third parties (instantaneous/immediate failure)
			15	Previously damaged pipe (delayed failure mode)
			16	Vandalism
	8	Incorrect Operations	17	Incorrect operational procedure
	9	Weather Related and Outside Force	18	Cold weather
			19	Lightning
			20	Heavy rains or floods
			21	Earth Movements
Unknown		Unknown	22	Unknown

Figure V-2 The nine threat categories and 22 threats from AMSE B31.8S (Format used by PG&E in RMP-06)

2. Deficiencies in PG&E's Threat Identification Process

a) Background

Risk is defined as the product of the Likelihood of Failure (LOF) and the Consequence of Failure (COF). That is Risk = LOF*COF. The LOF factor is an estimate of the risk of failure that depends on each of the threats applicable to each of the pipeline segments located in an HCA.

The four threats PG&E uses to calculate the LOF factor are External Corrosion (EC), Third Party damage (TP), Ground Movement (GM) and Design/Materials (DM), which incorporates both manufacturing and construction defects.[38] The respective RMPs that cover the overall calculation of risk and each of the threat categories include:

[38] PG&E's formula used to determine Likelihood of Failure is LOF=0.25EC+0.45TP+0.20GM+0.10DM.. The number ahead of each threat is the weighting, thus external corrosion is weighted by 25%, third party damage is 45% or almost twice as high as EC, etc.

RMP-01, which is the procedure that covers the overall calculation of risk identified in the formula above; RMP-02, which covers factors used to estimate the risk of external corrosion; RMP-03, which covers factors used to estimate the risk of third party damage; RMP-04, which covers factors used to estimate the risk of ground movement and natural forces on the pipeline; and RMP-05, which covers factors used to estimate the risk due to manufacturing and construction defects. Other RMPs and RMIs[39] cover other specific procedures used in the Integrity Management process. For example, RMP-09 covers the process for ECDA.

Other threats not incorporated into PG&E's Likelihood of Failure (LOF) algorithm include internal corrosion, stress corrosion cracking, equipment failure, incorrect operations (including human error), and cyclic fatigue. PG&E does, however, consider internal corrosion and stress corrosion cracking in a separate process outside of the risk ranking algorithm.[40] The threats of equipment failure and incorrect operations are considered to exist equally throughout PG&E's system. PG&E dismissed cyclic fatigue as a threat based on a report prepared for PHMSA on the stability of manufacturing and construction defects.[41]

The discounting of certain threats can, and did, result in an inappropriate assessment technology being used.[42] Specific errors in PG&E's threat analysis and how that impacted Line 132 are discussed below.

Also, inaccuracies in the LOF factors could result in a less accurate calculation of risk, and a less accurate risk ranking for each of the segments. This topic is covered in the risk assessment section below.

---

[39] An RMI is a Risk Management Instruction.

[40] PG&E provides an overview of this process in RMP-06, Rev. 0, page 29.

[41] Kiefner, John F., "Evaluation of the Stability of Manufacturing and Construction Defects on Natural Gas Pipelines", USDOT final report 05-12R, April 2007.

[42] Assessment technologies include hydro-testing, In-Line-Inspection (ILI), Direct Assessment (DA) and other technologies (which must be approved by PHMSA). Each of these technologies is only applicable to certain subset of each of the nine threats. For example, DA is only applicable to the threats of external corrosion, internal corrosion and stress corrosion cracking.

(1) PG&E's 2004 Baseline Assessment Plan

According to its 2004 Baseline Assessment Plan (BAP), PG&E identified the following threats on various segments on Line 132: external corrosion, manufacturing and construction defects, third party damage, incorrect operations, and weather and outside force. For Segment 180 (the segment that failed in this incident), PG&E identified the threats of external corrosion, third party damage, incorrect operations, and weather and outside force. For Segment 181 (the significance of this segment will be discussed below), PG&E identified the threats of external corrosion, manufacturing, third party damage, incorrect operations, and weather and outside force. Because of their importance in this incident, the threat categories of manufacturing and construction defects and cyclic fatigue are discussed in greater detail below.

(2) PG&E's Use of the Terms MAOP and MOP

PG&E uses the terms MAOP and Maximum Operating Pressure (MOP) to define two types of maximum allowable operating pressure. The two terms used by PG&E were defined in Day One of the NTSB Hearings along with PG&E's rationale for making this distinction:

> Per the Code of Federal Regulations, maximum allowable operating pressure, or MAOP, is the maximum pressure that a pipeline segment or system is authorized to operate at. For PG&E, in accordance with that definition, we define maximum allowable operating pressure to be the maximum pressure that a pipeline segment can operate at. We also define the term maximum operating pressure, or MOP, to be the maximum pressure that a pipeline system can operate at, and this pressure, this MOP is governed by the lowest MAOP. So because the Code of Federal Regulations uses MAOP to define both a system and a segment definition, we have developed this nomenclature to differentiate between the two.[43] [Emphasis added.]

[43] NTSB hearing transcript for March 1, 2011, page 73, lines 4-15.

PG&E uses MOP to define the MAOP of the system. However, a dual meaning for the Maximum Operating Pressure (MOP) is the maximum historical pressure seen on a pipeline system over the course of some time period. MOP is referenced in Part 192 in this context (i.e., Part 192.917(e)(3)). This historical maximum operating pressure may or may not reach the system MAOP.

(3) PG&E's Practice of Pressure Spiking

As noted in the public hearing transcript from the NTSB hearings on March 1, 2010, PG&E engaged in a practice of "spiking" certain transmission lines to "maintain operational flexibility."[44] PG&E increased the pressure on Line 132 to a little over the "system MAOP" of that line so that they could increase pressure as needed for customer demand, and at the same time, PG&E believed it would eliminate the need to consider manufacturing and construction threats as unstable as a result of increasing the pressure above the 5 year MOP. Identifying manufacturing and construction threats as unstable would mean that an assessment method capable of assessing seam, girth weld, and other manufacturing and construction anomalies would need to be used (hydro-testing or In-Line-Inspection).

PG&E runs Line 132 interconnected (valves open) to Line 109 at certain cross ties. However, Line 109's system MAOP is 375 psig, and Line 132's system MAOP is 400 psig. Therefore, when these two transmission lines are interconnected, the system MAOP is the lower of the two, which is 375 psig. PG&E normally runs the two lines interconnected, which means Line 132 could not exceed 375 psig. On two occasions, PG&E isolated these two transmission lines at the cross ties, and raised the pressure to a little over the Line 132 system MAOP of 400 psig; a practice that has since been suspended.

[44] NTSB_036-005-Amended.

(4) PG&E's Requirements in RMP-06 in 2004 for Manufacturing and Construction

As noted above, Part 192.917(e)(3) requires pipeline operators to analyze the threat of manufacturing and construction defects in all longitudinal seams, including DSAW and other seams with a joint factor of 1 in each HCA. PG&E's 2004 version of RMP-06, Rev. 0[45] under "Manufacturing Threat" states:

> **Manufacturing Threat:** The Manufacturing Threat shall be assumed to exist if the HCA meets one of the two following criteria.
>
> 1. If the pipe segment is a) Cast Iron, b) installed more than 50 years ago, c) joined with acetylene welds, d) joined with mechanical couplings, or
> 2. If the pipe segment has a Joint Efficiency Factor of less than 1.0 or is manufactured with Low Frequency ERW or Flash Welded Pipe (assumed to be pipe installed with ERW, Flash Weld, or Unknown Seam prior to 1970).

This first version of RMP-06 considered potential manufacturing defects to exist for steel pipeline segments if: (1) pipe installed more than 50 years ago, or (2) seams with a joint efficiency factor of less than 1.0, Low Frequency ERW, or Flash Welded Pipe, or pipe installed before 1970 that may have one of these seam types. The "Integrity Characteristics of Vintage Pipelines" report, a report referenced by PG&E in this first revision of RMP-06,[46] identifies DSAW as having manufacturing defects, including seam and pipe body defects.[47] Table E-6 of that report identifies incidents associated with certain manufacturers during certain years related to pipe body and seam weld defects for DSAW pipe. Additionally, as noted above, PG&E's own records show that the 1948 DSAW pipe from Consolidated Western had seam quality issues based on the rejection of some seam welds noted in the limited girth weld x-rays taken during installation and seam leaks and cracks found since the installation date. PG&E's procedure should have

---

[45] CPUC_248-04, RMP-06, Rev. 0, Section 3.5, page 28.

[46] *Id.*, Section 2.4, page 20.

[47] *Ibid*.

considered the category of DSAW as one of the weld types potentially subject to manufacturing defects, and subject to Part 192.917(e)(3).[48]

b) Manufacturing and Construction Defect Threat on Line 132

Part 192.917(e)(3) identifies requirements associated with manufacturing and construction defects for certain types of pipe. Part 192.917(e)(3) states that an operator must prioritize a covered segment as a high risk segment and consider a manufacturing and/or construction defect to be unstable if one of three criteria are met. Those three criteria are: (i) the operating pressure increases above the MOP experienced during the five years preceding identification of the HCA, (ii) the MAOP increases, or (iii) the stresses leading to cyclic fatigue increase.

For the first criteria specified, Part 192.917(e)(3)(i), this means that the operator identifies the MOP experienced during the 5 years prior to the identification of the HCA, and if a subsequent operating pressure exceeds that maximum baseline value (the MOP), a manufacturing and/or construction defect must be considered potentially unstable. The amount by which the MOP value needs to be exceeded is clarified in FAQ-221;[49] this FAQ indicates that any pressure increase above the 5 year MOP value would cause

---

[48] Findings from both the 2011 Risk Assessment audit and PG&E's response in the record keeping OII indicate that PG&E did not believe DSAW pipe was an integrity threat. As noted in the 2011 Risk Assessment audit, PG&E's RMP-06 (Rev. 6, Section 3.5, page 29), under manufacturing threat did not give consideration to DSAW. Also, as noted in PG&E's OII response (I11-02-016, Tab 9, page 4-3, Lines 15-17), "Prior to the accident in San Bruno, there was no indication within the industry to suggest that DSAW pipe would present a long seam threat necessitating a long seam assessment." This position is contrary to data included in the "Integrity Characteristics of Vintage Pipelines" report referenced by PG&E in its first revision of RMP-06. The report was produced by the INGAA Foundation, an industry association.

[49] FAQ's are supplementary guidance provided by PHMSA to interpret the Part 192, Sub-part "O" requirements related to Integrity Management. The caveat given for this guidance is "These Frequently Asked Questions (FAQs) are intended to clarify, explain, and promote better understanding of the pipeline integrity management rules. These FAQs are not substantive rules and do not create rights, assign duties, or impose new obligations not outlined in the existing integrity management regulations and standards. Requests for informal interpretations regarding the applicability of one or more of the pipeline integrity management rules to a specific situation may be submitted to PHMSA in accordance with 49 C.F.R. § 190.11."

manufacturing and/or construction defects be considered unstable. Thus, the date for identifying HCAs for each transmission segment is important for applying this rule.[50]

The deadline for identifying existing HCAs and implementing an integrity management program is codified in Part 192.907, which states:

> No later than December 17, 2004 an operator of a covered pipeline segment must develop and follow a written integrity management program that contains all the elements described in §192.911 and that addresses the risks on each covered transmission pipeline segment. [Emphasis added.]

PG&E's implementation of the ECDA process along Line 132 shows that at least some HCAs were identified before December 2003 when PG&E operated Line 132 to approximately 400 psig. This is important because the MOP, or maximum baseline pressure used in Part 192.917(e)(3)(i) should be based on the 5 years preceding the actual HCA identification date. PG&E started performing ECDA assessments on certain Line 132 segments in 2002 as a demonstration project. PG&E began implementing the ECDA process for other segments on Line 132 in 2003, 2004, 2006/2007, 2009 and 2010. PG&E's ECDA process, from start to finish, has typically taken more than a year. In 2003, PG&E started the ECDA assessment process primarily in the middle of Line 132, including Segments 180 and 181. Two tasks in that process (part of the pre-assessment step), ECDA region identification and indirect tool selection, show that certain HCA segments, including Segments 180 and 181, were identified before the December 2003 pressure spike.[51] These two tasks for Segments 180 and 181 were performed on or before December 16, 2003.[52] The actual indirect inspection surveys[53] were performed later in 2004.

---

[50] In fact, PG&E's Risk Management Instruction 06 (RMI-06) lays out the procedure for identifying this date and documenting the 5 year MOP value prior to identification to the HCA. The procedure was effective on 3-13-08, and is intended to be used with Part 192.917(e)(4).

[51] CPUC_197-Q01Atch01.

[52] On the ECDA performed on Line 132 in 2004, which included both Segments 180 and 181, Form A, Data Element Check Sheet (of the covered segments), was dated December 9, 2003; therefore the HCAs must have been identified by this date. (CPUC_197-Q01Atch01)

The dates of the first pressure spike (December 11, 2003) and the indirect inspection tool selection for segments 180 and 181 (December 16, 2003) are almost the same date. Other segments on Line 132 also had indirect inspection tool selections made prior to the December 11, 2003 date, which supports the conclusion that all of the HCA segments listed in the 2004 ECDA Assessment of certain segments on N-Seg[54] 132 were identified prior to the pressure spike of December 11, 2003.[55] Based on this information, we conclude that the HCA containing Segments 180 and 181 was identified before the pressure spiking on December 11, 2003 took place.

PG&E operated Line 132 to approximately 400 psig in order to establish a maximum baseline value on two occasions. PG&E operated the line at 402.37 psig on December 11, 2003 at 18:00 hours and at 19:00 hours the pressure was 402.60 psig; PG&E also operated Line 132 at 400.73 psig on December 8, 2008 at 14:00 hours.[56] The point on the system where these pressures were measured was identified as MMT_PT0083: MLPTS-TER L132 PRESS.[57] This point is at the Milpitas Terminal.[58]

As noted above, applying 192.917(e)(3)(i) means that you determine the date the HCA was identified, and look back five years from this date to identify the baseline MOP value for the specific segments being considered (Segments 180 and 181 in this instance). The first step is to identify a pressure monitoring point upstream of Segments 180 and 181 that will be used to identify the MOP and subsequent pressures that may exceed this

---

[53] Indirect inspection surveys are physical tests conducted above ground. They are meant to identify indications of possible corrosion or defects in the protective covering (called a "holiday") on steel pipeline segments. Some of the tools used include Pipeline Current Mapper (PCM), Direct Current Voltage Gradient (DCVG), etc.

[54] PG&E defines N-Seg in RMP-09, Rev. 7, page 6. An N-Seg is "...a ""numbered"" transmission line with a portion of the pipeline identified for assessment using ECDA. An N-Seg consists of one or more ECDA Regions and includes any taps, dregs, gcusts, dfms, dcusts and numbered lines, etc., that are tapped to it. See Figure 2.5."

[55] CPUC_197-01 Data Elements Check Sheet and Indirect Inspection Tool Selection.

[56] NTSB_004-005-Amended.

[57] NTSB_036-005-Amended.

[58] NTSB_036-004 (Exhibit 2M).

pressure. The nearest pressure monitoring point is at Summit and Skyline Blvd.[59] Because the SCADA monitoring point at the end of the Half Moon Bay tap is the next upstream pressure monitoring point, it was used as a proxy for the pressures on Segments 180 and 181 instead of the pressures at Summit and Skyline Blvd.[60]

If PG&E had identified the HCA on any date in 2003 before the pressure spike on December 11, 2003, the five year look back of pressures at the Half Moon Bay tap would not have been any greater than 372.19 psig. The highest MOP experienced during 1998 at Half Moon Bay was 368.50 psig in October. No pressure data was provided at Half Moon Bay for 1999;[61] the SCADA data was lost and no hard copy pressure charts were provided for this station. The highest MOP experienced on Line 132 at Half Moon Bay during 2000 was 369.77 psig in June, and in 2001 the MOP was 371.11 psi in November of 2001.[62] The MOP experienced at the Half Moon Bay tap in 2002 was 371.19 psig, and the MOP between 1-1-2003 and the date of the clearance and pressure spike on 12-11-03 at 15:00 was 372.19 psig.[63,64] The maximum pressure at the Half Moon Bay tap during the clearance operation was 382.64 psi. The pressure at Half Moon Bay tap during the pressure spike exceeded the maximum operating pressure experienced in the previous 5 years by approximately 10 psi.[65]

---

[59] CPUC_288-03. The pressures are monitored with a circular paper chart recorder.

[60] This is consistent with the instructions given in PG&E's RMI-06 (Rev. 1, Section 4.3, page 6), which is a procedure for applying 192.917(e)(4).

[61] CPUC_248-01.

[62] CPUC_274-01.

[63] This pressure was measured on 8-12-03 at 2300 hours. If the HCA was identified before this date, then the MOP value for 2003 would have been lower than 372.19, and the MOP value for the 5 year look back (excluding 1999) would have also been lower.

[64] NTSB_053-004 and CPUC_288-04 Atch13. This maximum value excludes pressure readings taken during the clearance operation. Also, there were 110 instances between 1-1-2002 and 12-11-2003 where there was a loss of data during transfer of data between SCADA and data storage.

[65] It should be noted that pressures between the pressure measuring point (in this case Half Moon Bay) and Segment 180 will be affected by changes in elevation and pressure losses due to the dynamics of the system (i.e., frictional losses). Thus, there will be some differential between the pressure measuring point and Segment 180.

In the 2004 BAP Rev. 0, PG&E identified Segment 180 as not having the manufacturing threat, but Segment 181 was identified as having the manufacturing threat.[66] Because the MOP experienced on Line 132 prior to HCA identification was no higher than approximately 372 psig (or less), PG&E should have identified Segment 181 as having a potentially unstable manufacturing threat following the pressure increase, as well as all other HCA segments identified before the pressure increase in December 2003 where the manufacturing threat was identified and there was no prior hydrostatic pressure test per Part 192, Subpart J.[67] At that time, per PG&E's pipeline survey data sheet, Segment 180 was identified as seamless pipe installed in 1956, and Segment 181 was identified as DSAW pipe installed in 1948. These segments were identified in the pipeline survey sheet as having a pressure test, but the test pressure was listed as "NA." Therefore PG&E should have conservatively assumed no pressure test existed.[68]

Integrated data from construction records for the 1948 installation of DSAW pipe as well as other seam and girth weld leaks[69] and data included in the "Vintage Characteristics of Pipelines" report[70] should have further confirmed the potential for manufacturing and/or construction defects on Segment 181. Table E-6 in the "Vintage Characteristics of Pipelines" report identifies Consolidated Western as a manufacturer of DSAW pipe that has had incidents for both pipe body (1950 and 1954-56) and seam welds during certain years (1947, 1950, 1954-56). Consolidated Western is listed as the

---

[66] Segment 181 was identified as having a manufacturing threat because it was older than 50 years but Segment 180 did not meet that criterion in 2004.

[67] FAQ 220 says in part, "Assessments for manufacturing and construction defects generally are not required for pipe that has successfully passed a Subpart J pressure test even if these changes in operating conditions occur..."

[68] ASME-B31.8S-2001, page 51 states: "Where the operator is missing data, conservative assumptions shall be used when performing the risk assessment or alternatively the segment shall be prioritized in a higher category." [Emphasis added.]

[69] This data is summarized in Table 2 of the NTSB Report and reproduced in the section on Deficiencies in Step 3 of this report.

[70] As noted above, this report is referenced in PG&E's 2004 version of RMP-06 as a data source.

manufacturer of the pipe used in Segment 181 with a "year installed" date of January 1, 1948.[71]

The Moody Engineering report[72] also discussed issues related to the welding defects during the manufacturing process. For example, part of the analysis done by Moody stated: "As now arranged, the Berkeley Welding Units will not complete a sound solid weld to the very end of each longitudinal seam of each cylinder. It is characteristic of these units to allow the weld to crack about two to three inches at the leading end of the cylinder, and about four to eight at the trailing end of the weld. This condition is no doubt the result of "spring-back" of the plate at the ends of the cylinders..." This analysis should have also confirmed the potential for manufacturing defects on Consolidated Western pipe.

As a result, PG&E should have identified Segment 181 as a high risk segment per Part 192.917(e)(3), and assessed Segment 181 with a technology capable of detecting unstable defects (hydro-testing or ILI). Further, PG&E should have done this by December 17, 2007 per the requirement in Part 192.921(d), which states:

> **Time period**. An operator must prioritize all the covered segments for assessment in accordance with §192.917 (c) and paragraph (b) of this section. An operator must assess at least 50% of the covered segments beginning with the highest risk segments, by December 17, 2007. An operator must complete the baseline assessment of all covered segments by December 17, 2012. [Emphasis added.]

Had PG&E hydro-tested Segment 181 before December 17, 2007, they would have discovered Segment 180 was DSAW pipe, necessitating consideration of this pipe as potentially having an unstable manufacturing defect.[73] Segment 181 is adjacent to 180, to the north. Alternately, PG&E may have chosen to hydro-test Segment 181 with other

---

[71] CPUC_248-06. In PG&E's pipeline survey sheet for Line 132, segment 181 has CONSOL listed as the manufacturer. PG&E confirmed in a data request that CONSOL refers to Consolidated Western.

[72] NTSB Report, p.29. In 1949, Moody Engineering Company submitted a report to PG&E on the manufacturing of 30-inch pipe by Consolidated Western Company.

[73] CPUC_248-05. The entire length of Segment 180 from the northern end to the southern end (excluding the pups) was DSAW.

adjacent segments for which hydro-test records could not be found. Segments 179.3, 179.6, 180 and 181 were all listed as having pressure tests with gas, but the test pressure was listed as N/A.[74] To summarize, had PG&E hydro-tested only segment 181, they would have noted that Segment 180 was itself a DSAW segment, necessitating that it be hydro-tested. Had PG&E hydro-tested Segment 181 in conjunction with Segments 179.3, 179.6 and 180, it is highly probable that one of the pups would have failed as discussed in the Assessments section of this report.

The same discussion regarding the 2003 pressure spike applies to the 2008 pressure spike. However, in this case, both Segment 180 and Segment 181 were identified as having the manufacturing threat according to the 2007 BAP (Rev. 3). While the pressure spike was intended to establish a MOP close to the MAOP, in fact, it should have triggered consideration of an unstable manufacturing threat concern on both Segments 180 and 181. Both segments should have been assessed with a technology capable of detecting unstable manufacturing defects (such as hydro-testing or ILI).

Also, under Part 192.917(e)(3)(i), the highest pressure of 402.73 psig would be the MOP value used. However, the MAOP of the system was 400 psig as established by the grandfather clause.[75] The MAOP should not be exceeded during normal operations (and this special clearance operation). The only time the pressure should be allowed to go over the MAOP is during abnormal operations involving the failure of a component. This is addressed in Part 192.195(a), which states:

> **General requirements**. Except as provided in Part 192.197, each pipeline that is connected to a gas source so that the maximum allowable operating pressure could be exceeded as the result of pressure control failure or of some other type of failure, must have

[74] CPUC_248-07 confirmed that as of the date of PG&E's response (November 23, 2011), no pressure test records were found.

[75] Part 192.619 describes three methods by which the MAOP can be established: A review of the design specifications of the line in question, a pressure test or the grandfather clause, so named because it allows an operator to establish the MAOP of older pipe by considering the highest pressure that occurred between July 1, 1965 and July 1, 1970.

> pressure relieving or pressure limiting devices that meet the requirements of Parts 192.199 and 192.201.

Part 192.201 identifies pressure limits beyond the MAOP that can be exceeded based on a normal operating pressure range. For transmission pressures, Part 192.201(a)(2)(i) indicates that the pressure cannot exceed the MAOP+10% or a pressure that produces a hoop stress of 75% of SMYS, whichever is lower. It is our interpretation that the maximum operating pressure cannot be allowed to go over the MAOP in establishing the 5 year MOP value. Rather, the 5 year MOP value should be limited to the MAOP as a maximum pressure. By going over the MAOP during the spike test, the de facto MOP value of 400 psig was exceeded. Because the MAOP (and MOP) pressure was exceeded, Part 192.917(e)(3) requires manufacturing and construction defects be considered as potentially unstable. This likewise would have required hydro-testing or use of an appropriate inline inspection device for Segment 181.

For the second criteria, Part 192.917(e)(3)(ii), even if one assumes that PG&E did not exceed their allowable MOP by the 2003 pressure spike, it would have been required to modify its MAOP from 400 psig to 403 since this was the pressure that it was claiming was the new MOP on Line 132. Pursuant to Part 192.917 (e)(ii) any increase in the MAOP would mandate that the HCAs in Line 132 would need to be assessed for manufacturing and construction defects since the line did not have a construction hydrostatic pressure strength test as required by California General Order 112 and 49 CFR Part 192 Subpart J, adopted in 1961 and 1970 respectively. Since PG&E did not seek an increase to the MAOP, the subject pipeline and segments are automatically considered unstable due to exceeding its MOP and MAOP. As noted above, according to FAQ 221,[76] any increase in the MOP, regardless of how small, makes a non-pressure tested pipeline or segment unstable and thus it must be assessed for manufacturing and construction defects using a suitable assessment method.

[76] See FAQ 221 at <http://primis.phmsa.dot.gov/gasimp/faqlist.gim#top12>

c) Cyclic Fatigue Threat on Line 132

One of the findings from the NTSB report is that fatigue[77] was a major factor in the failure of Segment 180 and was a threat on Line 132. PG&E should have undertaken the analysis required by Part 192.917(e)(2) on Line 132, and more broadly on all transmission lines, particularly for line segments that had not undergone hydrostatic pressure testing per Part 192, Subpart J as will be explained below.

The materials analysis section of the NTSB report described the initial defect, and the stages by which the defect grew to failure. The initial crack-like defect extended longitudinally along the entire length inside of the weld (the root) on Pup 1, resulting in a net intact seam thickness of 0.162 inches.[78] With a nominal 0.375 inch wall thickness, the intact wall thickness was approximately 43% at the weld. There was also an angular misalignment on the inside of Pup 1. Given this initial defect, an additional 2.4 inch defect grew to failure. As noted in the photo from Figure 21 of the NTSB report,[79] the initial crack-like defect first grew by ductile fracture (Stage 1). Then the crack grew by fatigue (Stage 2). The final stage was the rupture of the pipe, identified in the photo as quasi-cleavage fracture (Stage 3).

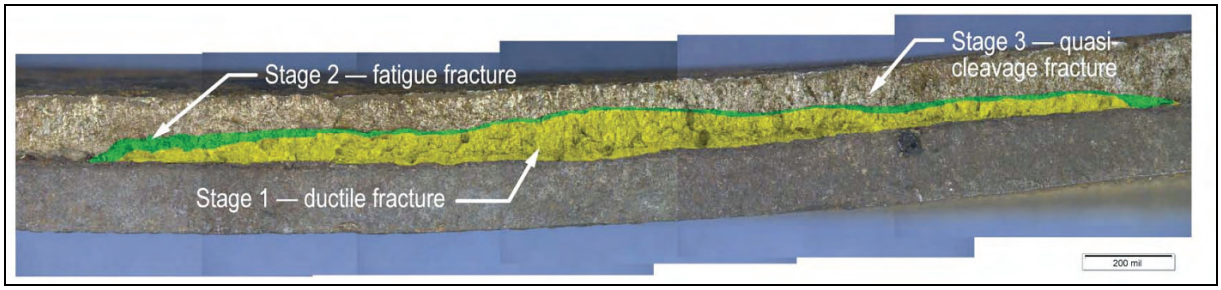

Figure V-3 Picture highlighting rupture initiation site on the Pup 1 longitudinal seam, (Reproduced from NTSB report (Figure 21).)

Part 192.917(e)(2) requires an analysis to take place, and an operator must assume the presence of threats that could be made worse by cyclic fatigue. Further, an operator

[77] In materials science, fatigue is the progressive and localized structural damage that occurs when a material is subjected to cyclic loading.

[78] NTSB Report, Section 1.8.1, page 41.

[79] NTSB Report, Section 1.8.2, page 45.

must consider other loading conditions that can induce additional stresses on the pipeline, including non-pressure induced cyclic fatigue. The code states:

> **Cyclic fatigue.** An operator must evaluate whether cyclic fatigue or other loading condition (including ground movement, suspension bridge condition) could lead to a failure of a deformation, including a dent or gouge, or other defect in the covered segment. An evaluation must assume the presence of threats in the covered segment that could be exacerbated by cyclic fatigue. An operator must use the results from the evaluation together with the criteria used to evaluate the significance of this threat to the covered segment to prioritize the integrity baseline assessment or reassessment." [Emphasis added.]

PG&E did not incorporate cyclic fatigue or other loading conditions into their segment specific threat assessments and risk ranking algorithm. PG&E's Integrity Management protocol matrix applicable in 2005 stated:

> Based on preliminary assessment, not considered a threat due to the level of increase and frequency of pressure increases in our system. However, also participating with INGAA in review of Keifner [sic] Cyclic Fatigue report to determine if there are situations that would be a concern. Also performing some review of pipelines with the greatest potential for cyclic fatigue to verify our preliminary assessment (See RMP-6 section 4.3).

PG&E's Integrity Management protocol matrix applicable in 2010[80] confirms that PG&E excluded the threat of cyclic fatigue by citing John Kiefner's report on evaluating the stability of manufacturing defects.[81]

Two important points about excluding cyclic fatigue are: 1) PG&E did not follow the requirement that it must assume the presence of defects and evaluate whether a failure could result from these defects in each of the pipeline segments; 2) the analysis done in John Kiefner's report made predictions about failure times in years given a number of assumptions, including material properties, defect geometry, the pressure test level (if

[80] This is a spreadsheet from PG&E that is used in conjunction with the PHMSA inspection protocols to identify how each protocol requirement is addressed in PG&E's Integrity Management program.

[81] Kiefner, John F., "Evaluating The Stability Of Manufacturing And Construction Defects In Natural Gas Pipelines", Final Report No. 05-12R, April 26, 2007.

any) and magnitude and frequency of pressure cycling that must be considered. Table 6 in Kiefner's report provides a summary of the predicted failure times for one specific example. Table 6 is reproduced below.[82]

It can be seen from Table 6 that the higher the proof-test-to-MOP levels, the longer the estimated time before a failure would occur due to fatigue cycling. Of particular importance is the case identified in the last row. It is assumed that a pipe has been in service for a long period of time, and has not been subjected to a proof (pressure) test. However, in this case the pressure is reduced to 80% of its previous highest pressure, resulting in an equivalent proof-test-to-MOP level of 1.25.

Table 6. Comparisons of Times to Failure from Pressure-Cycle-Induced-Fatigue for Various Proof Test Levels (Pipeline is 24-inch-OD, 0.289-inch-wall, X52 with toughness equivalent to 25 ft-lb Charpy V-notch upper-shelf energy. C = 8.6E-19 for ΔK in units of psi $\sqrt{\text{inch}}$, n = 3)

Description	Proof-Test-Pressure-to-MOP Ratio	Length of Defect, inches	Initial Depth-to-Thickness Ratio	Time to Failure, years	Time to Failure, years if one 5% over-pressure per year occurs
Pre-service test to 1.39 x MOP (MOP = 72% SMYS)	1.39	3.09	0.5	217	203
Pre-service test to 1.25 x MOP (MOP = 72% SMYS)	1.25	4.5	0.5	111	96
Mill Test to 85% of SMYS for MOP of 72% SMYS	1.18	5.36	0.5	77	60
Gas Test to 1.1 x MOP (MOP = 72% SMYS)	1.1	6.53	0.5	45	24
Mill Test to 75% of SMYS for MOP of 72% SMYS	1.04	7.59	0.5	23	Fails when over-pressure occurs
Pressure Reduction to 80% of highest previous pressure assumed to be 72% of SMYS	1.25	4.06	0.7	61	50

Figure V-4 Table 6 from Kiefner's report on "Evaluating the Stability of Manufacturing and Construction Defects in Natural Gas Pipelines."

[82] As noted on page 27 of Kiefner's report, the pressure cycling was based on the shortest life case from the pipelines examined in Kiefner, J. F., and Rosenfeld, M.J., "Effects of Pressure Cycles on Gas Pipelines", Gas Research Institute Contract No. 8749, Report No. GRI-04/0178 (September 17, 2004)

Given this set of assumptions, a predicted failure time due to fatigue cycling is determined. In this case, however, the assumed defect depth is 70% of the pipe wall thickness for this older pipe as opposed to an assumed value of 50% for new pipe. This assumption is made because a defect in place when the pipeline is placed in service has had a chance to grow over time. The defect depth is identified in the fourth column over as the "Initial Depth-to-Thickness Ratio." The longitudinal length of the defect is 4.06 inches. With these defect parameters, the pipeline would last 61 years before failing.

The analysis performed above could have been performed for segments along Line 132 that had not undergone hydro-testing. A number of segments on Line 132, including Segments 180 and 181, were also not hydro-tested, except that any analysis would have to take into account that the pressure was not reduced in calculating the minimum time to failure.[83] The importance of considering cyclic fatigue for non-strength tested (hydro-tested) pipe is that this can be the deciding or contributing factor between having stable manufacturing defects verses having potentially unstable ones.[84,85]

To summarize, Part 192.917(b) requires an operator to evaluate whether cyclic fatigue or other loading conditions could lead to the failure of a defect, and that an operator must assume the presence of threats (i.e., a manufacturing defects, dents or gouges) that could be exacerbated by cyclic fatigue. PG&E cites John Kiefner's paper on evaluating the stability of manufacturing and construction defects for exclusion of cyclic fatigue. However, this same paper does an analysis of cyclic fatigue to estimated time to failure for pipeline segments that have undergone hydrostatic testing to various levels and those that have not undergone hydrostatic testing. Kiefner states: "Since it is relatively

---

[83] CPUC_248-07. PG&E's pipeline survey sheets indicate that there was a pressure test with gas, but the test pressure was listed as NA, and as of November 23, 2011, PG&E has been unable to find the records.

[84] Kiefner discusses, starting on page 21, the three mechanisms by which manufacturing defects can grow. Those include quasi-stable ductile tearing, pressure cycle induced fatigue and pressure reversals. As noted in the report, "Absent their interaction with defects originating from other causes and except for hard spots and laminations. Manufacturing defects are known to become larger and therefore to have lower failure pressures only through one of three mechanisms."

[85] RMP-05, Rev. 4 considers points for hydro-testing verses no hydro-testing in factor G.

easy to calculate the relative aggressiveness of a given pressure spectrum, an operator should be readily able to establish the expected minimum time to failure for a given segment."[86] PG&E should have undertaken an analysis of those segments on Line 132 that had not undergone hydro-testing and included it in its threat analysis.[87] This analysis likely would have determined potentially unstable defects, and/or raised the risk on certain Line 132 segments.

E. Risk Assessment

Risk analysis is the process by which each individual pipeline segment in PG&E's system is given a risk score that is used to rank the segments for assessment (physical examination). The risk assessment also identifies the threats applicable to each line segment. As noted previously, the risk score is determined as the product of the LOF and COF factors (Risk = LOF *COF). If either of these factors is inaccurate, the risk score and risk ranking will be inaccurate.

1. Requirements for Risk Assessment

With regard to the risk assessment process, Part 192.917(c) requires:

> An operator must conduct a risk assessment that follows ASME/ANSI B31.8S, section 5, and considers the identified threats for each covered segment. An operator must use the risk assessment to prioritize the covered segments for the baseline and continual reassessments (§§192.919, 192.921, 192.937), and to determine what additional preventive and mitigative measures are needed (§192.935) for the covered segment.

Also, per the requirements of ASME-B31.8SS, Section 5.7(a), an operator is required to develop a risk assessment approach that provides an objective estimate of risk. Section 5.7(a) states:

---

[86] "Evaluating The Stability Of Manufacturing And Construction Defects On Natural Gas Pipelines", page 25.

[87] CPUC_271-01. Cyclic fatigue was incorporated into PG&E's risk algorithm RMP-05. However, no explicit analysis is given in this RMP.

> Attributes. Any risk assessment approach shall contain a defined logic and be structured to provide a complete, accurate, and objective analysis of risk.

Two other requirements from ASME-B31.8S are Sections 5.7(e) and 5.7(g), related to risk confidence and documentation. These code sections state, respectively:

> (e) Risk Confidence. Any data applied in a risk assessment process shall be verified and checked for accuracy (see section 12, Quality Control). Inaccurate data will produce a less accurate risk result. For missing or questionable data, the operator should determine and document the default values that will be used and why they were chosen. The operator should choose default values that conservatively reflect the values of other similar segments on the pipeline or in the operator's system. These conservative values may elevate the risk of the pipeline and encourage action to obtain accurate data. As the data are obtained, the uncertainties will be eliminated and the resultant risk values may be reduced
>
> (g) **Documentation**. The risk assessment process shall be thoroughly and completely documented to provide the background and technical justification for the methods and procedures used and their impact on decisions based on the risk estimates...

Thus, to the extent that PG&E's risk ranking algorithm does not incorporate certain factors, or does not reflect them in an appropriate way, the risk ranking algorithm will be less accurate. Documentation must also be provided for the methods and procedures used in the risk algorithms, especially where assumptions are made that appear to be non-conservative. Deficiencies with this algorithm found in both the NTSB's investigation and the 2011 Risk Assessment audit are discussed in the next section.

2. Deficiencies in PG&E's Risk Ranking Algorithm

a) Inaccuracies Identified in PG&E's Risk Ranking Algorithm from the NTSB Report

The NTSB report divided inaccuracies in the threat algorithm into two categories: 1) the overall weighting factors in PG&E's LOF formula reflected industry's experience

but did not reflect PG&E's actual operating experience; and 2) systemic issues in PG&E's algorithm used to estimate risk for each of the LOF factors.

For the first category, the NTSB looked at incident statistics reported to PHMSA for the years 2004-2010, and compared them to the factors used in the LOF algorithm. PG&E's algorithm assigns external corrosion a 25% weighting, third-party threat a 45% weighting, ground movement a 20% weighting and design/materials a 10% weighting. PG&E's incident statistics for the years 2004-2010 show that external corrosion was 51% of combined leaks, design/materials accounted for 24% of combined events, third-party accounted for 24% of incidents and ground movement accounted for 0% of incidents. While PG&E weighting factors may generally reflected industry experience, they did not reflect PG&E's actual operating experience.

For item two, the NTSB report identified these systemic issues along with specific examples along Line 132.

- In the third-party threat algorithm, an unknown depth of cover is assigned the same value as ground cover meeting new construction depth requirements. As noted in section 1.9.4.1, "Geographic Information System," the depth of cover for more than 82% of Line 132 is unknown.
- In several threat algorithms, non-conservative values are used for pipe wall thickness.
- PG&E uses MOP as a percent of pipe strength, calculated from the pipe diameter, pipe wall thickness, weld joint efficiency, and specified minimum wall thickness. As noted in section 1.9.4.1, "Geographic Information System," the pipe wall thickness for Line 132 is an assumed value for 41.75% of Line 132.
- The use of "wedding band" joints in place of a girth weld is not considered as an element of any of the threat algorithms, despite the fact that this type of joint is not as strong as a full penetration butt weld.
- Prior to the San Bruno incident, PG&E did not consider missing girth weld radiography records as an element of any of the threat algorithms.
- Construction damage is not considered as an element of any of the threat algorithms.

- Leaks resulting from manufacturing defects are only considered in threat algorithms if they occurred on the segment in question or on an adjacent segment with the same pipe properties and within 1 mile of the leak. Leaks on more distant pipe segments of the same vintage, same characteristics, and same manufacturer are not considered. These restrictions are a concern because PG&E used pipe of the same vintage, same characteristics, and same manufacturer in multiple noncontiguous segments, spanning multiple miles and separate lines. As recognized in ASME B31.8S, 2004 edition, a leak in one of those segments resulting from a manufacturing defect calls into question whether a related risk might exist on similar segments beyond the adjacent segments."[88]

b) Inaccuracies Identified in PG&E's Risk Ranking Algorithm from the CPSD/PHMSA 2011 Risk Assessment Audit

PG&E's risk ranking algorithm is identified in RMP-01. RMP-02, RMP-03, RMP-04 and RMP-05 support the calculation of risk by incorporating various factors that are applicable to each category of threat being considered.

(1) Deficiencies in RMP-01 (Risk Calculation)

As noted above, the calculation of risk is the product of the likelihood of failure and the consequence of failure; the Consequence of Failure (COF) algorithm consists of four factors.[89] These factors are the Impact on Population (IOP), Impact on the Environment (IOE), Impact on Reliability (IOR) and the Failure Significance Factor (FSF). The points formula for the IOP consists of three factors. The basis for assigning points to one of these factors, the Potential Impact Radius (PIR) in Section 6.4.1(C), is not documented or justified.

In Section 6.4, the Failure Significance Factor (FSF) is assigned a value of 1 if the gas transmission line is within 300 ft. of a hospital, school, prison or switchyard.[90] There

[88] NTSB Report, Section 2.6.1, page 108-109.

[89] RMP-01, Rev. 5, page 5.

[90] The Failure Significance Factor "...represents the relative likelihood of leak rather than rupture and the existence of Wall-to-Wall conditions which would make the consequences of a leak more severe." (RMP-01, Rev. 5, page 9.)

is no documented justification for this criterion. Since the PIR identifies the area that could be impacted by a rupture, these types of facilities might also be affected if they are greater than 300 ft away but within the PIR. This index factor should be based on the PIR value or 300 ft, whichever is greater.

In Section 9, PG&E defines HCA Risk and provides two formulas for calculating the risk (equations 4 and 5). The two risk elements, LOF and COF, are defined. We believe the COF formula is flawed because it does not account for differences in population density that could occur within the same area. On page 17, PG&E states: "Also, because all covered pipelines are, by definition, in High Consequence Areas, it is not necessary to consider anything other than size of failure."[91] All HCAs are not equal. For example, an HCA with 40 residences has a higher consequence potential than an HCA with only 20 residences as would an HCA with a multistory hospital versus one with a rural church.

(2) Deficiencies in RMP-02 (External Corrosion Threat)

The use of the non-conservative default value in Section 6.1, item A is not documented or justified because in Section 6.1, item H, PG&E assigns points based on high or medium voltage and with or without Cathodic Protection (CP) for AC/DC interference then identifies the default value as 10,000 ohm-centimeter. PG&E should more precisely define what is meant by high and medium voltage. Also, the presence of voltage sources within 500 feet of a pipeline segment does not necessarily imply interference currents on the pipeline. Therefore, PG&E should consider adjusting the points formula for known versus unknown interference currents.

(3) Deficiencies in RMP-03 (Third Party Damage)

The Third Party Damage (TPD) threat algorithm (RMP-03) does not include any score or consideration of one-call ticket frequency, which are key indicators of activity along the Right of Way (ROW) and an indicator of TPD risk.

[91] RMP-01, section 9.

(4) Deficiencies in RMP-05 (Design Materials Threat Algorithm)

The individual factors A through G for the algorithm in RMP-05 add up to 120%, effectively raising the weighting of the Design/Materials factor in the probability of failure formula in RMP-01.[92]

Under PG&E's A factor, PG&E assigns a points score of 10 to DSAW pipe, but does not include any considerations for modifying this value based on historic problems. PG&E should take into account DSAW pipe that has a history of incidents associated with certain manufacturers. For example, DSAW pipe is listed in the "Integrity Characteristics of Vintage Pipelines" report as having seam weld incidents and pipe body incidents for certain manufacturers.[93]

F. Assessments

The investigation determined that other assessment methods should have been used on certain covered segments (i.e., segments located in HCAs) on Line 132.

1. Other Assessment Methods That Should Have Been Used

As noted in the analysis of 192.917(e)(3) above, exceeding the 5 year MOP value, the de facto MOP of 400 psig and the MAOP should all have necessitated an examination of the threats due to manufacturing and construction defects with hydro-testing or an applicable ILI tool on Segment 181. If PG&E had hydro-tested Segment 181 as required by 192.917(e)(3), it is likely that PG&E would have discovered that Segment 180 was itself DSAW pipe, and necessitated that it also be hydro-tested.

In the process of hydro-testing Segment 181, fittings would have been required at both the North end and the South end of Segment 181 to introduce water for the hydro-test, and expel the water after the hydro-test. Sections of the pipe would have been cut out to put the fittings in line with the pipe. While removing the coating from the pipe,

[92] RMP-01, Equation 2, page 8.

[93] See for example Table E-6 and Figures F2, F4 and F5.

PG&E representatives or contractors would have noticed that the Segment 180 was DSAW. This should have necessitated that PG&E hydro-test Segment 180 because Segment 180 did not have pressure test records, and the 5 year MOP value had been exceeded.

Alternately, PG&E may have hydro-tested Segment 181 in conjunction with other adjacent segments for which hydro-testing records were not available (Segments 179.3, 179.6 and 180).

Because Segment 180 is in a Class 3 location, the segment would have been hydro-tested to a minimum of 1.4 times the MAOP per Part 192.619(a)(2)(ii).[94] Thus, the test pressure would have been at least 560 psig to maintain this MAOP. If PG&E had hydro-tested segment 180, it is probable that one of the pups would have failed. The maximum pressure at Milpitas Station on the day of the incident was under 400 psig. The NTSB used two different calculation methods to estimate the failure pressure of pups 1, 2 and 3.[95] The analysis methods included:[96]

- Net yielding according to ASME sponsored code B31G, 2009 edition, Manual for Determining the Remaining Strength of Corroded Pipelines; and
- Propagation of a crack-like defect according to API 579-1/ASME FFS-1-2007, Fitness-for-Service.

Using these two methods, the NTSB found that the calculated burst pressure estimates were 594 and 515 psig[97] for Pup 1; 668 and 574 psig for Pup 2; and 558 and 430 psig for Pup 3, respectively. The analysis was done assuming no crack growth in the weld defect in Pup 1. Also, these two methods do not take into account the angular

[94] Under 49 CFR 192.619 pipelines installed before 11/12/1970 in a class 3 area should have pressure test to a minimum of 1.4 times MAOP, those constructed after 11/11/1970 must be tested to 1.5 times MAOP.

[95] NTSB Report, Section 1.8.5, pages 48-50.

[96] It should be noted that the material properties of the welds in Pups 1, 2 and 3 could not be measured directly. Rather, they were inferred from micro-hardness data.

[97] This refers to pounds per square inch gauge.

misalignment of the Pup 1 longitudinal seam. It appears extremely probable that one of the pups would have failed during hydro-testing.

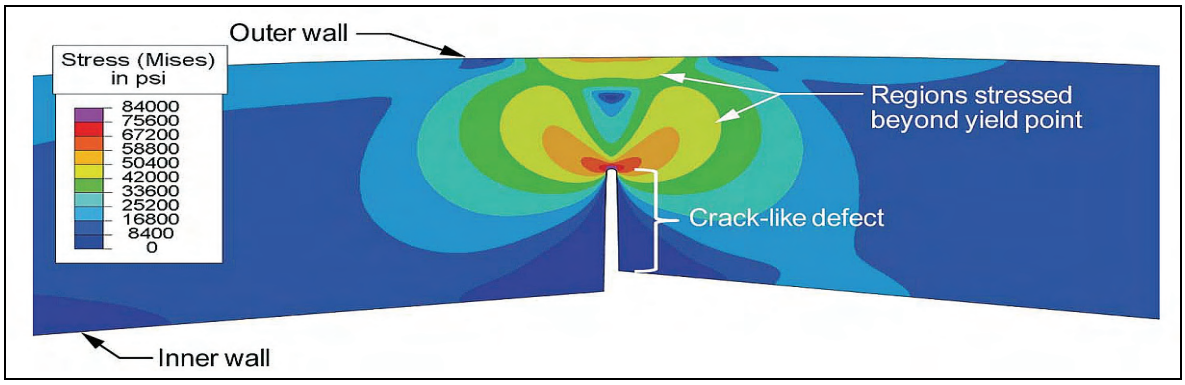

Figure V-4 Stress contours at an internal pressure of 375 psig for the finite element model of the weld geometry similar to Pup 1. (From Figure 22a of the NTSB Report)

A third analysis method was used to estimate the stresses induced around the crack like defect. Using finite element analysis, four models were developed, and pressures up to 400 psig were applied. Elastic and plastic behavior consistent with X42 steel were used in the models. One model was based on a section of pipe with geometry similar to Pup 1. Using an applied pressure of 375 psig on this model, the NTSB found the area beyond the yield stress (i.e., plastic deformation) was on the order of half of the pipe wall thickness.

To summarize, had PG&E used hydro-testing on Segment 180, it is highly probable that one of the defective pups would failed rather than during normal operations.

VI. Records

A. Summary

The investigation found that, at the time of the incident, PG&E transmission pipeline records were not accurate, complete, or verifiable. PG&E's records showed inaccurate information for Segment 180 of Line 132 and PG&E could not identify the manufacturer of Segment 180 or locate its as-built drawings, alignment sheets, specifications and other design, material, construction, inspection, and testing records. The investigation also found that PG&E's quality control failed to correct inaccuracies in its Geographic Information System (GIS).

PG&E failed to follow the record keeping standards in ASA B31.1.8-1955 which were applicable at the time Segment 180 was constructed and, in turn, violated the Public Utilities Code, Section 451 by operating its system unsafely by lacking accurate and locatable records essential for safe pipeline operation.

B. Applicable Rules and Standards

The Commission had safety jurisdiction over PG&E's gas pipelines when Line 132 and Segment 180 were constructed, but there were no specific state or federal requirements applicable specifically to record keeping at the time. However, ASA B31.1.8-1955, Chapter II, Welding, Section 824 described record keeping requirements of welding procedures and welder qualifications. Additionally, Chapter IV, Design, Installation, and Testing, Sections 840 and 841 required that as-built drawings and related design and construction documents and test records be maintained as long as the pipe remained in service.

GO 112 requirements, which were based on ASME B31.8 standards, have been in effect in California since 1961. The federal pipeline safety standards in 49 CFR Part 192, became effective on July 1, 1970, and explicitly required gas operators to keep all as-built drawings and construction documents.

C. PG&E Record Keeping Practices

PG&E currently owns and operates approximately 6,750 miles of high pressure pipeline operating at pressures greater than 60 psig, of which 5,800 miles meet the Part

192.3 definition of transmission line. In addition, PG&E has 40 miles of gas gathering pipeline and approximately 42,000 miles of distribution pipeline in a service territory covering 70,000 square miles.

Approximately 67% of PG&E's current transmission pipeline system was constructed before the federal regulations became effective in 1970. PG&E's transmission pipeline design, manufacturing, construction, testing, operation, and maintenance standards and activities have changed considerably since PG&E first started operating and providing natural gas to its residential, industrial, and commercial customers.

In the late 1960s and early 1970s, PG&E created Pipeline Survey Sheets (PLSS) for its pipeline system containing pipeline specifications such as pipe diameter, wall thickness, long seam type, and coating. The data for pipeline characteristics was obtained from job files which contained construction records, design drawings, bills of materials, job estimates, as-built records, pressure calculations and testing records. The transfer of information from the job files to the PLSSs was not performed accurately and resulted in errors in certain cases. In some cases, the data to populate the PLSSs came from journal vouchers instead of the job files. Journal vouchers were documents created by the accounting department personnel to keep track of material transfer and should not have been utilized to capture pipeline specification data.

PG&E started to develop an Esri based GIS application in 1994 -1995 timeframe and linked pipe specifications of its gas transmission pipelines to GIS. PG&E mappers transferred data from PLSSs into the database. This process was completed over several years. PG&E conducted random sample verification of data as an additional quality control measure in order to identify data entry errors. Since then, PG&E has upgraded the GIS software several times.[98]

GIS is a computer system capable of capturing, storing, managing, analyzing, and displaying geographically referenced information. GIS can relate different information in

[98] CPUC_091-15.

a spatial context with reference to geographic location data to reach a conclusion about the relationship. If complete and accurate data is used, GIS applications also allow users to create interactive queries, visualize data in different formats to reveal relationships, patterns, and trends in the form of maps, reports, and charts. Since the data is stored as layers of information, GIS makes it possible to perform complex analyses. It uses geography, statistical analysis, and database technology.

Electronic record keeping has improved the way pipeline data is stored and accessed. However, PG&E's transfer of data from hard copies to electronic format was not performed adequately. Some data was not transferred accurately or was completely missed due to human error or varying software versions and file format incompatibilities.

D. Segment 180 Construction Records

The pipeline data for Segment 180 contained in the GIS database at the time of the incident was incorrect. It contained the following errors:

- The long seam was identified as "seamless" instead of a longitudinal weld.
- The pipe grade was identified as X42 (yield strength of 42,000 psi) instead of X52 (yield strength of 52,000 psi).
- The pressure test year and medium were recorded as 1961 and gas respectively. However, it does not appear that Segment 180 was pressure tested.

The following table summarizes Segment 180's characteristics in the GIS database at the time of the incident and after they were corrected.

Table VI-1 Segment 180 Pipeline Characteristics, Operation, and Test Data

Pipeline Characteristics	GIS Data Before September 9, 2010	Corrected Data After September 9, 2010
Mile Points	39.04- 39.37	39.04- 39.37
Year Installed	1956	1956
Length (ft)	1742	1742
WT (in)	0.375	0.375
OD (in)	30	30
SMYS (psi)	42,000	52,000
Pipe Grade	X42	X52
Manufacturer	Unknown	Unknown
Class Location as built	2	2
Class Location present	3	3
MAOP (psig)	400	400
MOP (psig)	375	375
Test pressure (psig)	NA	NA
Test Duration (hr)	NA	NA
Pressure Test Date	1961	NA
Pressure Test Medium	G	NA
% SMYS @ MAOP	38.09	38.09
% SMYS @ MOP	35.71	35.71
Type of Pipe Coating	HAA[99]	HAA
Girth Weld Type	ARC[100]	ARC
Long Seams Type	SMLS	DSAW[101]
Joint Efficiency	1	1
Joint Type	BUTT[102]	BUTT

NA: Information is not available

The Segment 180 data contained in the GIS came from PLSS map 385121, which contained the same incorrect information. The data in PLSS map 385121, in turn, came

[99] HAA: Hot Applied Asphalt.

[100] ARC: Arc welding is a type of welding that uses a welding power supply to create an electric arc between an electrode and the base material to melt the metals at the welding point.

[101] DSAW: Double Submerged Arc Welding.

[102] BUTT: It is a type of weld to connect two pipe ends which penetrates the full thickness of the pipe wall.

from journal voucher 174143. The following table summarizes the data in the journal voucher.

Table VI-2 Journal Voucher Data

Description	Code Number	Quantity
PIPE, 30” OD x .375” wall stl sml API 5LX grade X-42 DW (MPO 25970)	01 1373	198’
PIPE, 30” OD x .375” wall stl sml API 5LX grade X-42 bare (MPO 15425)	01 1485	281’

When the Segment 180 PLSS was populated, PG&E claims it interpreted the “sml” notation as “seamless” even though the acronym normally used for seamless was “SMLS”. Later, the incorrect seamless designation in the PLSS was transferred to the GIS.

After the incident, PG&E discovered engineering documents related to Segment 180, filed under job number 136471, which clearly showed that the Segment was DSAW and not seamless. PG&E’s quality control failed to cross check the PLSS data against available engineering documents and correct the seamless designation at the time the PLSS was created and again at the time the data was transferred to GIS.

Additionally, since seamless pipe does not exist for 30-inch diameters, and that there were no records in PG&E’s possession that PG&E ever purchased such pipe, PG&E’s quality control should have caught that this designation was in error.

After the incident, NTSB’s metallurgical examination revealed that Segment 180 contained six short pups. Neither PLSSs nor GIS records showed any indications that these pups existed, and there were no records about the pups in Job File 136471.

Thus, PG&E failed to keep accurate records of its pipeline system. It clearly did not follow the standards in ASA B31.1.8-1955. PG&E violated the Public Utilities Code, Section 451 for its failure to keep records necessary to safely operate its pipeline.

E. Commission's Record Keeping Directives After the Incident

On September 13, 2010, Executive Director of the Commission, Paul Clanon, ordered PG&E to preserve all records related to the San Bruno incident. Following his order, the Commission issued a Resolution No. L-403 on September 23, 2010, to ensure the safety of the public in California in connection with the operation of the PG&E's natural gas transmission system. Mandate 7 of Resolution No. L-403 stated the following:

> 7) Preserve all records related to the incident, including work at the Milpitas Terminal during the month of September 2010.

On September 11, 2010, PG&E's General Counsel instructed all company employees to preserve and retain all paper and electronic documents. The same email from PG&E's officials further explained the following:[103]

> In essence, these instructions inform you of your legal obligation to preserve in its present state any potentially relevant information and, in the case of any doubt, to preserve information. <u>We want nothing discarded that may contain potentially relevant information</u>. [Emphasis added.]

Item 2 of the instructions further stated:

> The term "document" should be understood in the broadest sense. Most importantly, "document" refers to paper and <u>electronic material of every type</u>. Paper documents include, but are not limited to, memos (sent or unsent), letters (sent or unsent, in draft or final form), handwritten notes (however informal), forms, post-it notes, telephone messages, charts and drawings, calendars, and day-timers, etc. Electronic documents include, but are not limited to, e-mails (whether on the Company's e-mail system or in a personal account), word processing documents, PowerPoint presentations, electronic calendars, spreadsheets, <u>tape recordings</u>, text-messages, and all other computer files and records. For electronic files, the term "document" includes all associated metadata and/or embedded data. [Emphasis added.]

[103] CPUC_210-14

Item 4 of PG&E's instructions stated:

> If any electronic files are set for automatic deletion after a prescribed period of time, that function should be disabled. If you inherit (or have inherited) any documents or files from a departing employee, any potentially relevant documents kept by that employee must be preserved and retained. [Emphasis added.]

PG&E officials issued several additional notices and reminders for its employees on the same issue on September 15, 2010, September 28, 2010, December 2, 2010, February 8, 2011, and July 15, 2011.

PG&E was unable to provide the video tape recorded at the gas control room located at the Brentwood facility for the period September 9 and September 10, 2010. PG&E explained that the video tape was retained on a digital video recorder that was part of the closed circuit electronic security system and was overwritten after approximately 60 days when it became full.[104]

Even though PG&E officials issued company-wide instructions for the preservation of all records, the video digital record was overwritten and not preserved. PG&E violated Commission's Resolution No. L-403 by not preserving the video tape and PG&E also violated Public Utilities Code 702 which requires every public utility to obey and comply with every order, decision, direction, or rule made or prescribed by the Commission.

F. Record Keeping Order Instituting Investigation

On February 24, 2010, Commission opened an investigation (I.11-02-016) to ascertain the adequacy of PG&E's recordkeeping for the entire life of the San Bruno pipeline that ruptured on September 9, 2010 and to ascertain the recordkeeping adequacy for all PG&E gas transmission pipelines. As part of I.11-02-016, Legal Division has hired consultants, done extensive discovery including data requests and site visits, and is now currently writing its report on recordkeeping. That investigation is ongoing and the

[104] CPUC_008-16

recordkeeping report is to be served in March 2012. The Records section of this report may be updated in light of the findings of the recordkeeping report in I.11-02-016.

VII. Milpitas Terminal/SCADA

A. Summary

The investigation found multiple deficiencies in PG&E's Control System at Milpitas Terminal which existed at the time of the incident and led to the loss of pressure control and deficiencies in the SCADA system that delayed the response by the Gas Operators. The investigation also found PG&E in violation of Part 192.13(c) for not following its own procedures related to system clearances and Part 192.605(c) for not having adequate procedures for recognizing abnormal operating conditions. PG&E also failed to timely test employees at the Milpitas Terminal for alcohol and therefore violated Part 199.225. PG&E also violated the Public Utilities Code, Section 451 for allowing deficiencies to exist in its system which interfered with its ability to handle an emergency.

B. Supervisory Control and Data Acquisition (SCADA)

Supervisory Control and Data Acquisition (SCADA) is the use of computers and communications networks to gather field data from numerous remote locations, perform numerical analysis, and generate trends and summary reports. These reports are displayed in a structured format to enhance Gas Control Operators ability to monitor, forecast and send commands to field equipment. Some pipelines span long distances and are usually operated from a central location using a SCADA system. SCADA is employed for many different processes such as management of electric power lines, operation of oil refineries, and operation of automobile assembly plants. SCADA systems make it possible to control a process that is distributed over a large area with a small group of people located in a single room.

In the more advanced SCADA system, functionality is programmed into the SCADA software to help operators manage the system. This can involve calculations to detect rapidly changing values or patterns that should not occur under normal conditions. An example is an increase of pressure at one place on the pipeline with a simultaneous

decrease at another point. This could be a malfunctioning instrument, a leak in the pipe or a complete pipe rupture.

Highly automated systems can recognize some emergency situations and automatically apply corrective actions. These systems can be programmed to automatically reduce pressures or close pipelines when highly abnormal situations are detected. Properly designed systems can greatly improve reliability and safety.

SCADA systems that control long pipelines require elaborate and secure telecommunications networks to connect all the monitoring stations along the pipeline. These networks must be designed for high reliability and usually parallel systems provided for redundancy.

SCADA data can be displayed as layers in a GIS system. It is possible to integrate the SCADA and GIS into a single system with a common database. The decision to integrate data is mostly a matter of cost, information security, and operator need and convenience. The ability to quickly see the geographic location and specific GPS coordinates of a valve where pressure is measured, for instance, could be useful in directing emergency personnel in the event of an emergency.

C. Description of PG&E's Gas SCADA System

PG&E's gas SCADA system is one of the largest in the U.S., providing remote control of 6,438 miles[105] of transmission pipeline. Parts of PG&E's 42,141 miles of gas distribution pipeline are also monitored by SCADA. About 9,000 sensors and devices are installed along the length of the pipelines to enable the display of flow rates, equipment status, valve position status, pressure set points, and pressure control among other data. The current generation of SCADA used by PG&E is based on Citect software from Schneider Electric.

The entire pipeline is controlled and managed from the Primary Gas Control Center located in San Francisco. An alternate control center is located in Brentwood.

[105] NTSB Report, PB2011-016501, Paragraph 1.9, page 51.

Several compressor stations and local control stations such as the Milpitas Terminal are situated along the pipelines, each with a separate local control system. Although PG&E excludes separate local control systems from the SCADA system, for the purpose of this report the local control systems are included and considered to be a part of the entire SCADA system.

PG&E supports its SCADA system with an extensive telecommunications infrastructure to provide private and secure communications for gas SCADA as well as for other SCADAs they operate.[106]

PG&E's SCADA system is separate from its GIS. The GIS data is displayed on separate computer screens at each of the operator consoles at both the primary and alternate gas control centers.

[106] CPUC_153-04.

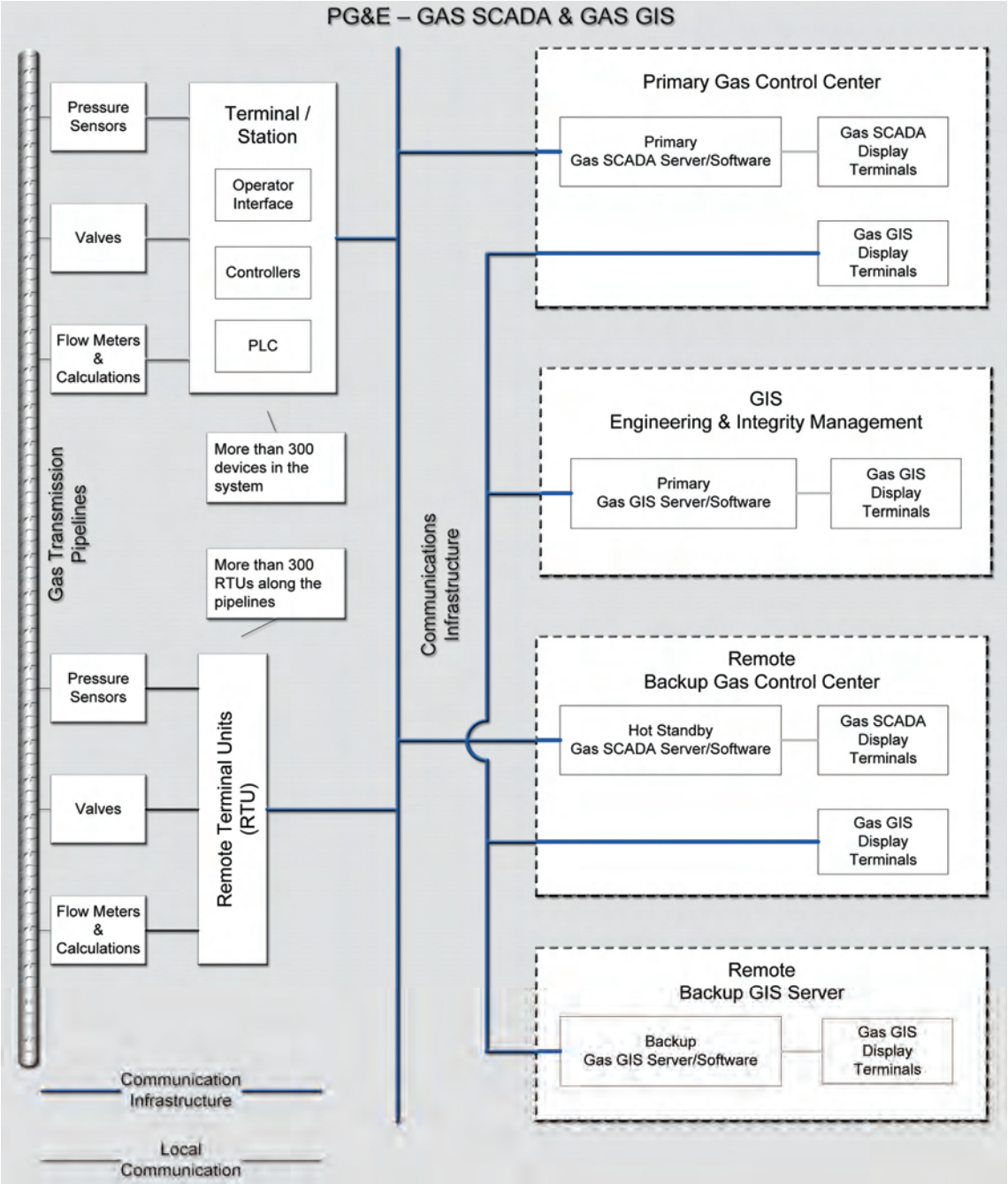

Figure VII-1 Simplified block diagram of PG&E SCADA & GIS

D. SCADA Alarms and Notifications

The PG&E SCADA system is programmed to alarm when the pressure exceeds the Maximum Allowable Operating Pressure (High-High alarm) or if the value is less than a preset low level (Low-Low alarm). It does not provide automatic control or intelligent alarming functions such as high rate of change alarms. The operational decisions are made by the Gas Operators in charge of the five consoles at the Gas Control

Center. The Gas Operators can set two other pressure alarm levels as they choose, either as High or Low alarms.

PG&E Alarm Policy[107] specifies alarm handling procedures for transmission pipelines (operated at greater than 60 psig) and distribution pipelines differently. The policy allows 10 minutes for the Gas Operator to assess the situation and initiate an action, and an additional 10 minutes for follow up monitoring.

E. Overview of Milpitas Terminal

The Peninsula transmission pipelines 101, 109, and 132 all originate from the Milpitas Terminal. The Milpitas Terminal serves as a receiving point for natural gas coming from the northern portion and natural gas supplied from the southern portion of the state. Natural gas is then redistributed to various portions of the San Francisco Bay Area including San Jose and the Peninsula areas.

The Milpitas Terminal has four incoming lines and five outgoing lines and is equipped with pressure regulation and overpressure protective devices to control incoming and outgoing pressure. The pressure regulating valves are electrically actuated with SCADA controls[108] while the monitor valves are pneumatically controlled valves.[109] The monitor valves act as limiting devices to protect against accidental overpressure for the outgoing lines. The percentage the monitor valve is opened can be controlled through SCADA, but the monitor valve cannot be opened further than what is required to maintain the pressure setting manually set by the local gas technician.

---

[107] NTSB Exhibit 2-J, Alarm Policy.

[108] Regulator valve set points for outgoing lines, except for San Jose DFM, can either be manually set at Milpitas Terminal or remotely set through SCADA by PG&E Gas Control. The regulating valves set points for the San Jose DFM can only be adjusted manually at the valves.

[109] Pneumatic valves operate mechanically using compressed air or natural gas to move the valves. The set points for the monitor valves are manually set by local technicians at Milpitas Terminal.

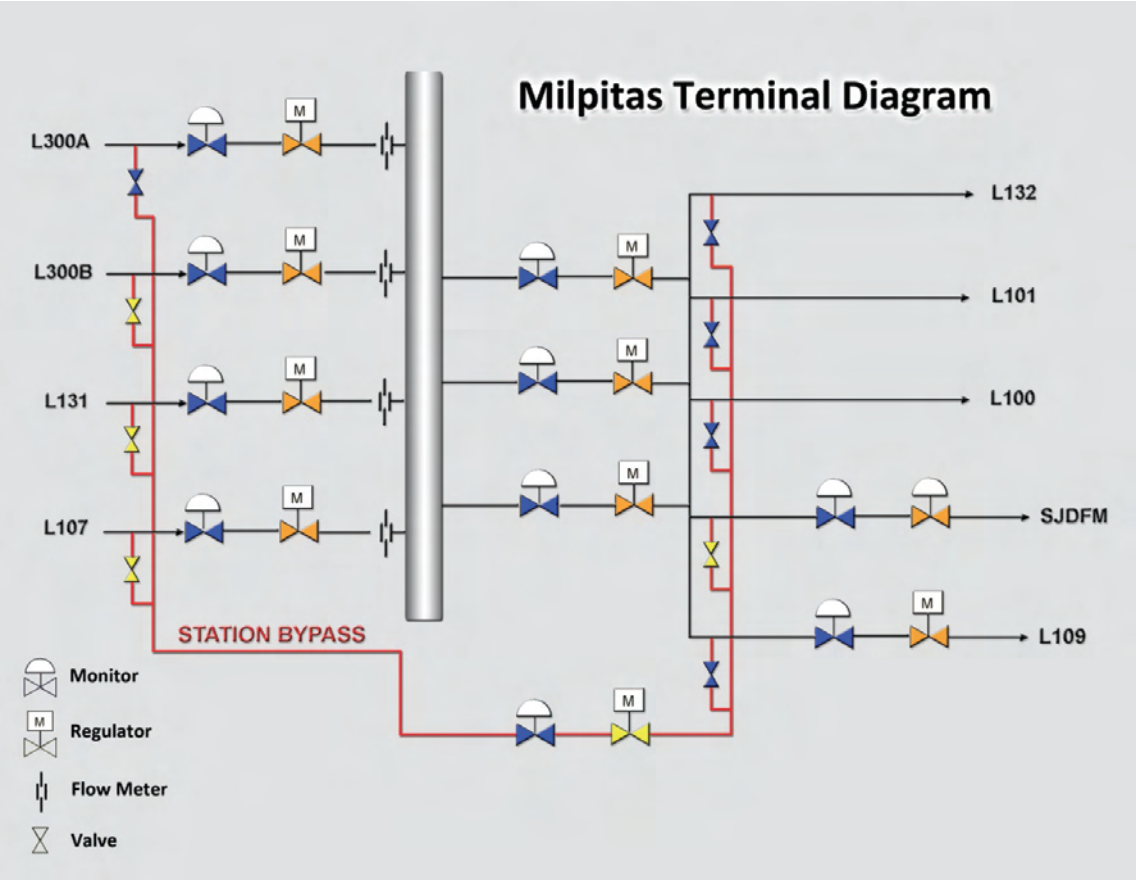

Figure VII-2 Simplified one-line diagram of Milpitas Terminal incoming and outgoing lines.

Each of the incoming lines has a regulating valve and a monitor valve to limit the pressure within the terminal. Natural gas flows into the terminal, through the separators to remove any liquids, and is routed to separate headers. Pressure is further reduced with a second regulating valve and a monitor valve for overpressure protection before it is sent through the outgoing lines. The monitor valves are normally left fully open. When the downstream pressure starts to increase and exceed a pressure set point, the monitor valve moves to control the downstream pressure. The monitor valve is usually set higher than the regulator controlling set point. The controlling set point for overpressure protection devices is governed by 49 CFR Part 192.201(a)(2)(i) which limits pipelines with MAOP

of 60 psig or more from operating at MAOP plus 10% or a pressure that produces a hoop stress[110] of 75% of SMYS, whichever is lower.

The station bypass line also has a pressure regulating valve and a monitor valve which allows for gas to flow from the incoming lines and directly to the outgoing lines if needed.

F. Overview of the Control System at Milpitas Terminal

Milpitas Terminal is maintained by PG&E's Milpitas District which has local technicians working on equipment and facilities within their district boundaries. Historically, PG&E had long-time local technicians working at the district who had gained knowledge on the operations and maintenance of Milpitas Terminal. Prior to September 9, 2010, two of these local technicians retired. As a result, PG&E brought in technicians from other districts to temporarily relieve the personnel shortage at the Milpitas District.

[110] Hoop stress is the force exerted circumferentially in a cylindrical wall.

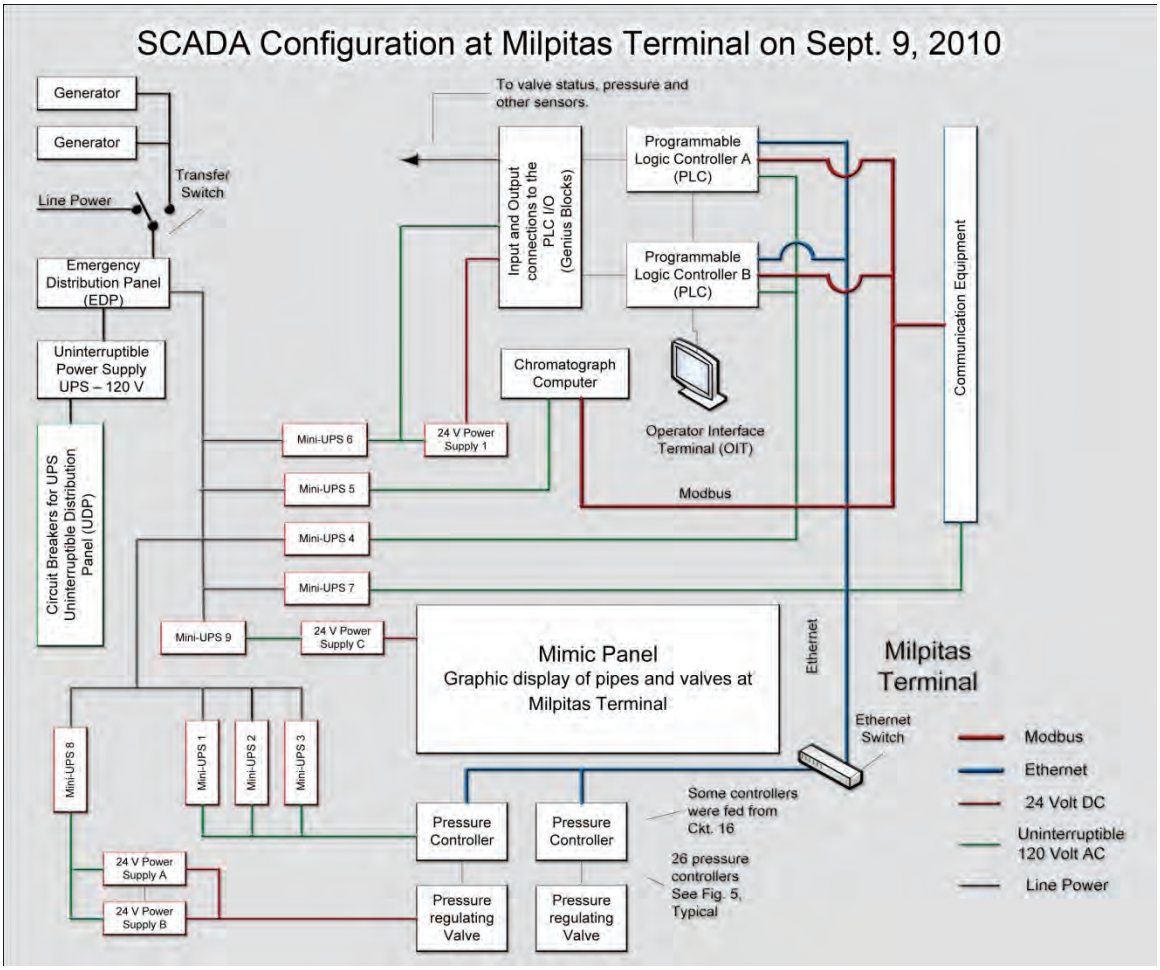

Figure VII-3 SCADA Configuration at Milpitas Terminal on September 9, 2010.

Figure VII-3 illustrates the key Control System and SCADA components at Milpitas, including the electrical supply, before pressure control was lost at about 5:23pm on September 9, 2010.

A control system consists of Programmable Logic Controllers (PLCs),[111] pressure controllers and related instrumentation which communicate with the SCADA computers in San Francisco. Redundant PLCs are provided with a fail-over switch so if one fails the other will pick up. The PLCs communicate with the 26 pressure controllers over a local Ethernet network. The PLCs execute a large program that calculates the flows and

[111] A PLC is a type of industrial computer which is equipped with Input/Output (I/O) devices that connect to electrical circuits such as valve operating mechanisms or pressure sensors. PLCs are typically located in an area close to the equipment.

processes the inputs from many valve position sensors. The PLCs manage communication with the 26 pressure controllers and generates controller error alarms should a controller fail or lose communication. The PLCs also communicate commands issued by the Gas Operators located at Gas Control Center in San Francisco[112] to control valves and to change pressure set points. Communication between the PLC software and the equipment is transmitted over individual wires connected to the PLC Input/Output (I/O) devices (also referred to as Genius Blocks).

The SCADA communication equipment at Milpitas Terminal is located in a separate room with controlled access that is maintained by the PG&E Information System and Technical Services group. Communications between the PLCs, the chromatograph computer and the communication equipment is over a Modbus[113] network.

Measured values from pressure instruments are communicated to a pressure controller or PLC over an electrical current loop circuit illustrated below:

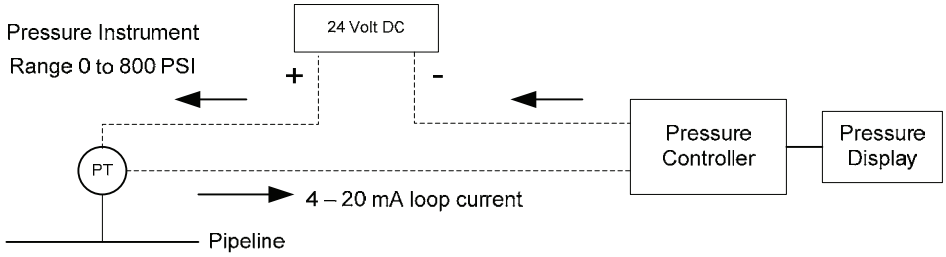

Figure VII-4 Electrical current loop circuit

The pressure instrument contains electronics which allows a current to flow in the loop that is proportional to the value of the measured pressure. At Milpitas Terminal, all of the pressure instruments have a full scale range of 0 to 800 psi.[114] The pipeline at

[112] Prior to the loss of pressure control and after the completion of the UPS-related work on September 9, 2010, PG&E's San Francisco Gas Control Center monitored and controlled Milpitas Terminal through the SCADA system.

[113] Modbus is a proprietary network technology employed in some Industrial Control Systems and is similar to Ethernet.

[114] NTSB_058-003.

Milpitas Terminal is rated up to 720 psig, therefore no pressure greater than 800 psig should ever occur.

The 0 to 800 psi range is scaled to a 16 mA range between 4 and 20 mA.[115] A 4 mA loop current represents 0 psig pressure. A current less than 4 mA occurs only when power is lost or there is an equipment failure. The pressure controller or PLC is programmed to convert the received current to the measured pressure value. For Milpitas Terminal, the displayed pressure is calculated as:

$$\text{Displayed pressure (PSI)} = ((\text{Current in mA} - 4) / 16) \times 800)$$

The controller feedback pressure values are relayed over the Ethernet connection to the PLC and then through the SCADA system to the Gas Operators in San Francisco.

The 24 Volt DC Power Supplies PS-A and PS-B provide power to many of the pressure sensor current loops at Milpitas Terminal. The pressure sensors provide pressure feedback to the pressure controllers that modulate the pressure regulating valves to maintain pressure at the set point value. The power supplies PS-A and PS-B are configured to operate as a redundant pair so if one should fail the other will continue to supply the load. Indicator lamps are provided on the mimic panel[116] to show if one of these power supplies is not producing the normal 24 volts DC output voltage.

The relationship between the loop current and the displayed pressures at Milpitas Terminal is shown in the graph below. It is clear that as the loop current decreased to less than 4 mA, the pressures displayed and recorded in the SCADA system will be negative.

[115] There are 1000 Milliamps (mA) in a one Ampere.

[116] Mimic panel is a graphic representation of the piping at Milpitas Terminal with lights indicating the status of valves. The mimic panel is mounted on the Control Panel and below it are pressure indicators and control switches to manually operate the valves. The wiring for the instrumentation and controls fills the inside of the control panel.

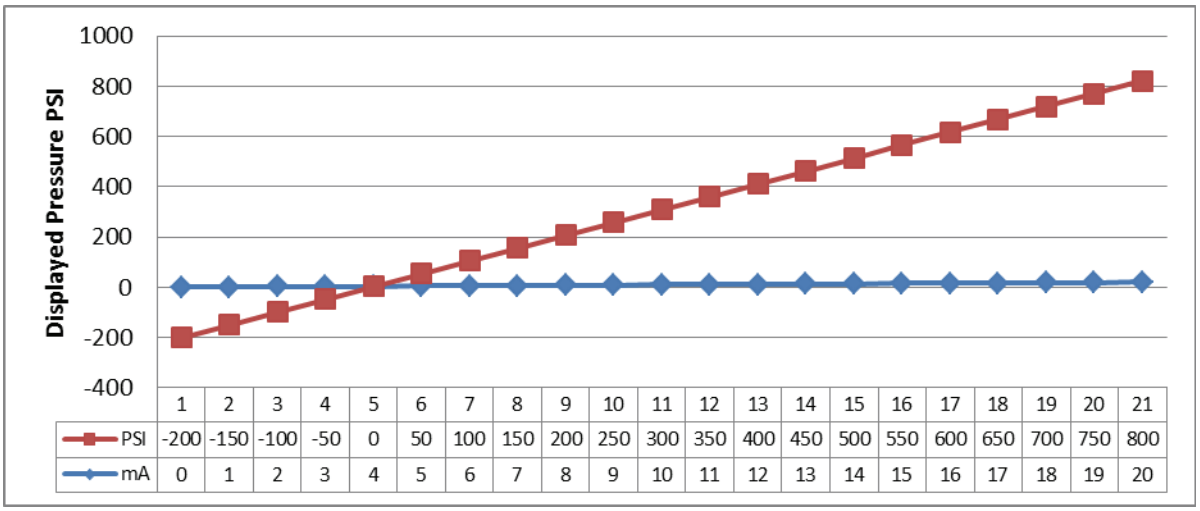

	1	2	3	4	5	6	7	8	9	10	11	12	13	14	15	16	17	18	19	20	21
PSI	-200	-150	-100	-50	0	50	100	150	200	250	300	350	400	450	500	550	600	650	700	750	800
mA	0	1	2	3	4	5	6	7	8	9	10	11	12	13	14	15	16	17	18	19	20

Figure VII-5 Relationship of loop current and SCADA displayed pressures

A 24 Volt DC Power Supply PS-C provides power for the mimic panel and some of the indicators associated with the panel. Power supply PS-C also provides power for some of the valve status and manual switch inputs to the PLC. A 24 Volt DC Power Supply PS-1 provides the power needed for the PLC and Genius Block Input/Output modules and for current loops serving the pressure sensors that are incorporated in the flow meters.

A large Uninterruptible Power Supply (UPS)[117] was installed to power the SCADA and control equipment for a short period of time[118] during a line power outage and before the emergency generators start delivering power. The UPS has a large battery pack and an inverter which converts battery power to standard 120 Volt AC[119] power. All

[117] Uninterruptable Power Supply is a device with a battery which when connected between the electrical power source and equipment, will continue to provide normal power to the equipment during a power outage of short duration (typically 10 to 30 minutes).

[118] The time between the power outage and when the generator kicks in could be approximately 20 seconds.

[119] 120 Volt Alternating Current power is conventional power found in electrical wall outlets in the United States.

equipment which needs to be powered by the UPS was fed from the Uninterruptible Distribution Panel (UDP).[120]

G. Milpitas Terminal UPS Failure Prior to September 9, 2010

In February 2010, PG&E asked a Contract Engineer to offer a proposal to "Investigate and provide recommendations for the UPS / Battery problems at Milpitas Terminal."[121] In mid-March 2010, a Contract Work Authorization was approved for him to perform the proposed work on the UPS at Milpitas.

On March 31, 2010, the UPS at Milpitas Terminal failed, completely exposing the entire control system to a short interruption of power[122] and potential loss of pressure control. The pressure controllers are connected to a UPS because they are known by PG&E to lose their configuration program and pressure set points when power is interrupted.[123] The UPS had been in service since the 1980s with a three-phase system which was no longer needed and for which parts were no longer available.[124] Thus, PG&E decided to replace the entire UPS system with a new one. According to PG&E, the lead time to acquire and install a new system could take several months

The pressure controllers employed by PG&E have a history of losing their configuration when power to them is cycled off and on.[125] To prevent this from happening during the transition from line power to generator power during a power outage, temporary mini-UPS[126] units were installed. PG&E installed three mini-UPS units on April 1-2, 2010 to provide temporary power to the station electronic valve controllers in

---

[120] An Uninterruptible Distribution Panel is an electrical enclosure which houses the circuit protection breakers feeding various electrical circuits that require continuous or uninterrupted power supply.

[121] CPUC_ 228-01.

[122] NTSB_084-014.

[123] Commission Examination Under Oath (EUO) of PG&E Gas Technician, June 17, 2011.

[124] CPUC_154-07.

[125] NTSB Interview of PG&E Gas Control Technician, September 16, 2010, page 22.

[126] Mini-UPS is a small portable UPS that can power a single computer or similar load power for about 20 minutes after power is lost.

case of a power outage. On April 23, 2010 a fourth mini UPS unit was installed for the station PLCs. However, power to the Ethernet switches that connect the pressure controllers to the PLC was not provided from a mini-UPS unit at this time.[127] Electrical engineering drawings were revised by PG&E in August 2010 to identify the changes required for the new UPS

H. PG&E Work Clearance for UPS Replacement

PG&E Work Procedure (WP) 4100-10 issued August 2009 describes the two types of clearances depending on the work to be performed: (1) System Clearance and (2) Non-system Clearance. System clearance is required for work that affects gas flow, gas quality, or the ability to monitor the flow of gas. All system clearances require authorization from PG&E's Gas System Operations (GSO).[128] On the other hand, non-system clearance does not affect gas flow, gas quality, or the ability to monitor the flow of gas. These do not require authorization by PG&E's GSO. A new system clearance application package is required to be submitted to PG&E's GSO at least 10 days prior to start of work for review and authorization. The clearance package includes the application for gas clearance, special instructions, sequence of operations, up-to-date and correct operating maps and diagrams, and any other drawing used to prepare for the clearance. New clearances require start and end times, dates, and a designated Clearance Supervisor. The clearance application must also completely describe the work to be performed.

The UPS work at Milpitas Terminal required a system clearance since the work affects the ability to monitor the flow of gas. There was no clearance issued for the work performed in April 2010 due to the unplanned outage caused by the unexpected failure of the UPS. A plan to address the issue was said to have been developed immediately.

---

[127] CPUC_259-02.

[128] PG&E's WP 4100-10 Gas Clearance Procedures for Facilities Operating Over 60 PSIG describes Gas System Operations to include Brentwood Gas Control, System Gas Control, and all manned stations.

PG&E stated that the UPS work continued in September of 2010 due to the lead time for the delivery of the replacement UPS. A clearance application for the UPS work at Milpitas Terminal was submitted on August 19, 2010 as Clearance Number MIL-10-09 and approved by PG&E Gas Control on August 27, 2010.

PG&E's WP 4100-10 requires a clearly designated Clearance Supervisor for all clearances at all times.[129] Instead, clearance application MIL-10-09 marked the Clearance Supervisor as "TBD". Under the Description box it shows "GC M&C remove old UPS system and install new UPS at Milpitas Terminal", with the Special Instructions box marked "Yes". On the list of Special Instructions, it showed: (1) "Technician to contact SF Gas Control prior to work and at the completion of work - Technicians will be on site with GC M&C during work", and (2) the names and contact numbers of the technicians working on the project. The checkbox on the form which asks if normal function of the facility will be maintained was checked "No". The clearance application requires an explanation whenever this box is checked "No". However, there was no explanation provided on the clearance application as to how the work will affect normal function of Milpitas Terminal.

Under the Sequence of Operations, the clearance application showed "Report On Daily and Report Off". It did not list any specific operations or key communication steps to be reported to Gas Control. PG&E's Work Procedure requires the Clearance Supervisor to report key communication steps identified in the Sequence of Operations to Gas Control including operation of any piece of equipment that affects the flow and/or pressure of gas or ability of Gas Control personnel to monitor the flow and/or pressure of gas on SCADA. One of the steps taken during the UPS work at Milpitas Terminal was switching the controllers to manual which locks the valve to its current setting and disables Gas Control's ability to change the valve settings remotely. This should have been clearly stated on the clearance application as a key communication step within its

[129] NTSB_003-001 S2. PG&E WP4100-1010 Gas Clearance Procedures for Facilities Operating Over 60 PSIG, pages 6, 9.

Sequence of Operations. Further, PG&E WP 4100-10 requires the Clearance Supervisor to fill in any steps in a system clearance with the time, date, and initials of the person completing the step and file the clearance as completed.[130] There is no record provided by PG&E showing the specific steps taken and the time, date, and initials of the person completing each step in the system clearance.

I. Analysis of PG&E's UPS Clearance Application

Part 192.605(a) states in part:

> Each operator shall prepare and follow for each pipeline, a manual of written procedures for conducting operations and maintenance activities and for emergency response. For transmission lines, the manual must also include procedures for handling abnormal operations.

Part 192.13(c) states:

> Each operator shall maintain, modify as appropriate, and follow the plans, procedures, and programs that is required to establish under this part.

Review of PG&E's work procedure for system clearances and the clearance application submitted for the Milpitas Terminal UPS work showed a number of instances wherein the PG&E procedure was not adhered to. Further, the clearance application went through a process of review and approval without the details required by PG&E's Work Procedure. This is a violation of Part 192.13(c).

Transcript of recorded phone calls between the Milpitas Terminal gas technician and Gas Control Operator[131] prior to commencing the UPS work shows that the local gas technician described the steps that they were going to take on September 9, 2010. The gas technician notified Gas Control that they would temporarily lose the SCADA monitoring and controlling ability as they switched certain valves from Auto to Manual. During the conversation, the Gas Control Operator asked the gas technician if what he

[130] NTSB_003-001 S2. PG&E WP 4100-10 Gas Clearance Procedures for Facilities Operating Over 60 PSIG, page 8.

was describing is on the clearance application so that he can get the clearance and follow along as they go through the planned work for that day. The local technician answered "yes" and seemed to believe that the clearance application contained detailed description for the UPS work, although he clarified that the clearance application was prepared by somebody else. It was unclear from the transcript if the Gas Control Operator obtained a copy of the clearance, but if he did, it would have been apparent that the clearance application did not contain any details as to the extent of the work being performed and how it could impact their ability to monitor and control the Milpitas Terminal through the SCADA system. Instead it appeared that the Gas Control Operator relied on the ability of the local technician and other PG&E and contract personnel working with him to maintain the system's functionality during the course of the UPS work.

Part 192.605(c) requires the operations, maintenance and emergency manual to include procedures for handling abnormal operations for transmission lines. This would require recognition of possible abnormal operating conditions (AOCs) during the course of work and formulating a plan to handle the AOCs. Review of PG&E's WP 4100-10 does not require pre-planning for handling any abnormal operations that may be encountered during the clearance work. PG&E did not anticipate the extent of any abnormal conditions that may be encountered during the UPS clearance work and did not prepare for how to address these abnormal conditions prior to performing the UPS work in Milpitas. Furthermore, Gas Control approved the clearance without absent specific details on what was to be done to complete the UPS replacement work, bringing into question PG&E Gas Control's knowledge of the extent of the UPS replacement work in Milpitas and how it could affect their operations. Without this knowledge, PG&E's Gas Control and local Milpitas personnel could not have prepared for unexpected events that might be encountered during the clearance work.

[131] NTSB Exhibit 2Y, PG&E Gas Control Operator Logs, September 9, 2011, page 47, lines 7-17.

J. Preparatory work at Milpitas Terminal on September 9, 2010 for the UPS Upgrade

On the afternoon of September 9, 2010, the Contract Engineer with assistance from the Gas Technician, Apprentice Gas Technician 1 and the Construction Lead were reconnecting all remaining circuits in the UDP to mini-UPS units.[132] The work was in preparation for the removal of the existing UDP and installation of a new one.

Between 2:00pm and 4:40pm, the team installed mini-UPS units 5, 6, 7 and 8 (refer to Figure VII-3) for the Chromatograph, PLC I/O and Genius Blocks, 24 volt DC power for pressure sensors (PS-A and PS-B), and the communications equipment. The three Ethernet Switches that connect the pressure controllers to the PLCs were also placed on mini-UPS at this time.[133]

Mini-UPS unit 7 for the communications equipment was the last one they planned to install that day. At 4:46pm the Gas Technician at Milpitas called Gas Operator 2 to let him know SCADA communication with Milpitas Terminal would be interrupted for a few minutes[134] while they installed Mini-UPS unit 7.

After the Contract Engineer and his team had transferred what they thought was the last circuit, they discovered an unidentified active circuit breaker remained in the UDP panel. The Contract Engineer switched it off and the mimic panel went dead. After some research, he was able to identify power supply PS-C as the one which was connected to the unidentified breaker, and powered the indicators on the mimic panel. He then installed mini-UPS unit 9 to power PS-C and the mimic panel.[135]

At that time, the system appeared to be operating normally. Alarm records show no activity from 5:09 to 5:21pm. The crew working in Milpitas was getting ready to wrap up believing they had successfully completed the planned activities for the day.[136]

---

[132] Commission EUO of Contract Engineer, October 31, 2011, page 11.

[133] CPUC_259-02.

[134] NTSB Exhibit 2-DX, Timeline of Events for September 9, 2010.

[135] Commission EUO of Contract Engineer, October 31, 2011, pages 20 and 21.

[136] NTSB Interview of Contractor Employed by Pacific Gas & Electric, September 16, 2010, page 10.

At 5:23pm, records of SCADA alarms and pressure readings indicate valves opening and pressure increasing. The pressure readings measured at flow meters M31, M32 and M38 on Lines 132, 101 and 109 respectively, increased from 370 psig to 380 psig in about 90 seconds.[137] At the same time the Gas Operators in San Francisco observed High-High alarms at Milpitas and along the Peninsula pipelines.[138] Shortly after, the Gas Technician noticed that three controllers had failed and the Construction Lead observed that all the pressure displays on the mimic panel were showing zero.[139]

At 5:25pm, a Gas Operator called the Gas Technician and they began the effort to identify what had happened. The pressure set points on the incoming lines were reduced as a precaution against over pressurizing the lines leaving Milpitas Terminal. A Gas Operator also instructed the Gas Technician to manually lower the set points at the monitor valves.[140] The detailed sequence of the gas pressure management until the situation was under control can be found in the Timeline of Events for September 9, 2010.[141]

The Contract Engineer and Construction Lead with assistance from the Apprentice Gas Technician1 began troubleshooting the loss of pressure information. They later identified the source of the problem as the 24 Volt power supplies PS-A and PS-B. The voltage was fluctuating between 5 to 7 volts. [142] The voltage variations resulted in a malfunction of the pressure instruments and communication of pressure information over the current loops to the controllers and the SCADA system. Such voltage fluctuations are normal for the power supplies when they are overloaded, usually because of a short. [143]

---

[137] CPUC_ 188-13.

[138] NTSB Exhibit 2-DX, Timeline of Events for September 9, 2010 Prepared by NTSB,

[139] NTSB Interview of Construction Lead, September 16, 2010, page 10.

[140] NTSB Exhibit 2-DX, Timeline of Events for September 9, 2010.

[141] *Ibid.*

[142] NTSB Interview of Contractor Employed by Pacific Gas & Electric, September 16, 2010, page 11.

[143] Shorting (Short) refers to anything in a circuit that results in excessive current to flow. This can be caused by a wire touching another wire or some grounded metal. If the wires are just barely brushing against each other, the short may be partial where voltage does not go to zero but reduces. This is the type

As a result of the failed current loops, pressure controllers received erroneous low pressure feedback values. Pressure controllers then commanded regulating control valves to fully open in an effort to maintain pressure as a result of the erroneous low pressure feedback.

The Contract Engineer and Construction Lead began working in the Control System enclosure where there are hundreds of small wires terminated on long terminal strips. They disconnected and reconnected circuits to find where the shorted wires or other load on the 24 volt current loops.[144] At about 8:40pm, they eliminated the short and all the instruments and controls then resumed normal operation.[145] The shorted connection was at a terminal block near the PS-A and PS-B where wires were possibly jostled during connection of the mini-UPS

The three controllers which had malfunctioned about the same time that the 24 volts was lost still did not work. It was after 10:30pm when the Sr. Gas Engineer[146] was able to restore their operation. Those units suffered a rare type of malfunction and the manufacturer had to be contacted to advise how to correct it. PG&E did not determine if this malfunction was indicative of failing or defective units and they are still in service.[147]

K. Recorded Pressure Readings Prior to the Rupture

As shown in the table below, the Milpitas Terminal has four bi-directional[148] incoming lines: L-107, L-131, L-300A, and L-300B and five outgoing lines: San Jose Distribution Feeder Main (DFM), L-100, L-101, L-109, and L132. The table below shows the corresponding MAOP and MOP for these lines according to PG&E, and recorded pressures prior to rupture:

---

of short that occurred on September 9, 2010.

[144] NTSB Interview of Technical Crew Leader, September 16, 2010, page 13.

[145] Commission EUO of Contract Engineer, October 31, 2011, page, 48.

[146] Commission EUO of Sr. Gas Engineer, October 20, 2011, page 6.

[147] Commission EUO of Sr. Gas Engineer, October 20, 2011, page 14.

[148] Gas flow can flow in either direction, in or out, at this station.

Incoming Lines:	MAOP (psig)	MOP (psig)	Operating pressure prior to rupture (psig)[149]
L-107	720	477	314
L-131	595	590	571
L-300A	558	558	531
L-300B	600	600	364

Outgoing Lines:	MAOP (psig)	MOP (psig) [150]
San Jose DFM	200	200
L-100	400	400
L-101	400	375
L-109	375	375
L-132	400	375

L. Analysis of the Recorded Pressure Readings Prior to the Rupture

At 5:22pm, the SCADA center received multiple alarms of increasing pressures on lines leaving the Milpitas Terminal. A Gas Operator asked the Milpitas Gas Technician to check on some valve positions and pressures readings within the Milpitas Terminal. At 5:30pm, the Gas Control Operator told the Gas Technician that he was seeing a SCADA pressure read of 458 psig before the mixer.[151]

At 5:42pm, the local Gas Technician found the regulating valves for the incoming L-300B to have failed wide open. Gas Control Operator requested that the Gas Technician reduce the monitor valves set points to 370 psig to control the incoming gas flow from L-300B.[152] At 5:49pm, the Gas Control Operator also asked the Gas Technician to close both the bypass line regulating and monitor valves.[153] At 5:55pm, the Gas Technician reported that the bypass line regulating valve and the monitoring valves

[149] Based on SCADA pressure reads found in NTSB_064-005.

[150] NTSB Exhibit 2AJ, Milpitas Operations & Maintenance (NTSB 033-006).

[151] NTSB Addendum to Exhibit 2Y - Audio Enhanced Transcript of SF Control Room Logs on September 9, 2010, page 81, lines 11-16.

[152] *Id.*, page 100, lines 5-17.

[153] *Id.*, page 108, lines 20-25.

for L-300B were closed.[154] High pressure within Milpitas Terminal was observed by the Gas Control Operator as he mentioned to the Gas Technician that they were seeing almost 500 psig downstream.[155] It was after the set points within the Milpitas Terminal were lowered and the bypass line was closed that a pressure gauge was placed on one of the outgoing lines. At 6:04pm, the Gas Technician reported reading 396 psig on his pressure gauge on Valve 49, downstream of L-132.[156]

PG&E records show that the station piping MAOP at Milpitas Terminal is rated for 720 psig. [157] The highest recorded pressure on SCADA within the Milpitas Terminal was 497 psig[158] before the mixer.

The pressures leaving Milpitas Terminal peaked at 396 psig between 5:22pm and 5:25pm.[159] Also, it can be noted from the SCADA data that between 5:22pm to 5:25pm, the pressure went from 363.2 psig to 394.6 psig on L-101 Los Esteros meter located about half a mile from the Milpitas Terminal. SCADA data on L-101 Los Esteros meter[160] shows a pressure read of approximately 393 psig around the same time the Gas Technician reported the 396 psig downstream pressure on L-132 to Gas Control at 6:04pm. Since L-101 and L-132 come from the same header #2,[161] the pressure in both lines should be relatively close within half a mile from Milpitas Terminal. However, there is no record showing a pressure higher than 396 psig leaving the Milpitas Terminal prior to the rupture.

---

[154] *Id.*, page 116, lines 10-14.

[155] *Id.*, page 116, lines 15-17.

[156] *Id.*, page 120, lines 1-13.

[157] NTSB Exhibit 2AJ, Milpitas Operations & Maintenance (NTSB 033-006).

[158] NTSB_064-001.

[159] *Ibid.*

[160] NTSB_084-010.

[161] A header is a common pipeline where two or more pipelines are combined through connections. These are typically required when a single or multiple inlet sources are used to feed a single downstream location.

The highest pressure recorded at an upstream location closest to L-132 Segment 180 was 386 psig.[162] This recorded pressure is lower than the established MAOP of 400 psig for L-132. Line 132 MAOP established by the "grandfathering rule" based on the highest recorded pressure at Milpitas Terminal of 400 psig on October 16, 1968, but the actual pressure on Segment 180 during in 1968 is unknown.

A properly constructed pipeline that met PG&E and industry standards during its installation in 1956 would have most likely withstood a pressure of 386 psig. However, it was apparent that there were more underlying causes which led to Segment 180 rupturing at a pressure that it was expected to safely withstand.

M. Post-Incident Replication by PG&E

PG&E conducted tests in an attempt to replicate the alarms that were generated during the time when control was lost on September 9, 2010.[163] They were able to recreate all of the types of alarms observed but not necessarily all of the conditions that could cause them.[164] The Supervising Engineer who performed the replication and analysis stated[165] that he could not explain all of the alarms that occurred. PG&E confirmed that they were unable to determine the cause of controller errors from 5:01pm to 5:09pm, or why there were none from the time pressure control was lost at 5:23pm until after 8:40pm. Also they could not determine why the three malfunctioning controllers never generated an alarm.[166] The loss of 24 Volts supplied by power supplies PS-A and PS-B would create some of the controller alarms observed, but not all.

In its replication documentation, PG&E referred to "failure" of PS-A and PS-B as the fluctuating voltages that were observed by the Contract Engineer and Construction Lead. The 24 volt power supplies PS-A and PS-B, which were the subject of the loss of

---

[162] NTSB_001-013.

[163] CPUC_ 202-04.

[164] *Id.*

[165] NTSB April Interview of SCADA Control Group Supervising Engineer, April 20, 2011, page 26.

[166] CPUC_259-03.

pressure control, remained in service until September 27, 2010[167] and subsequently were bench tested.[168] Those tests showed that, when under load, one of the supplies only delivered about 17 volts and the other even less. On September 9, 2010, the Contract Engineer on multiple occasions measured a solid 24 volts on those supplies. [169] The explanation is that the bench tests were likely performed with higher current loads than are actually present to those supplies when installed. The actual load on these supplies when in service is around 2 Amperes but the supplies are rated at 10 Amperes. At the actual load of around 2 Amperes they produced 24 volts. A third party consulting firm[170] investigated the power supply operation after they were removed from the system. They found that if the aluminum electrolytic capacitor in the current limiting circuit had degraded it could have allowed the power supplies to reduce output voltage at currents less than their rated capacity. Further, the current limiting circuit is designed so that once activated, output voltage will not return to 24 volts until power to supply is cycled off and on. This may have caused some of the anomalies, alarms and erratic pressure values recorded by the SCADA during the episode.

N. Training and Qualifications of Gas Operators

The PG&E Gas Control Centers are equipped with five identical operator consoles one for each of the five positions:

- Sr. Gas Coordinator
- Gas Coordinator
- Gas Operator 1
- Gas Operator 2
- Gas Operator 3

[167] CPUC_235-03

[168] NTSB Interview of Supervising Engineer, January 4, 2011, page 17.

[169] *Id*, page 17.

[170] CPUC_242-01

The Gas Coordinators are managerial positions. They are responsible for maintaining gas inventory and managing the bargaining functions and commercial aspects. They can also operate the gas pipeline although it is not their normal duty.

Each console holds the SCADA display screens, a communications console, a GIS display, displays for intranet,[171] the Gas Logging System (GLS),[172] and other software tools they use. For fatigue management, the station's consoles can be raised and lowered to enable the gas operators to switch between sitting and standing.

Prior to becoming a Gas Operator, an employee has to successfully complete and pass a PG&E-established written training guideline for a Gas System Operator in training (OIT). In addition, these individuals have to complete and pass a test contained in PG&E regulatory mandated Operator Qualification (OQ) program (49 CFR, Part 192, Subpart N). PG&E's training program consists of four training modules and On-the-Job Training (OJT) that includes field training activities and required a minimum of 21 months (twenty-one months) to complete. The training modules incorporated a comprehensive list of lessons (such as introduction to SCADA, control room procedures and processes, PG&E's major pipeline stations/terminals, compressor stations and transmission backbone) into a Computer Based Training (CBT), Field Training and OJT. PG&E supplements these initial trainings with subsequent Operator Qualification (OQ) written test and simulation evaluation every five years and an on-going training when stations are modified or added to the pipeline system.

At the time of the San Bruno pipeline rupture, the Gas Control Center was staffed with three Gas Operators, a Gas Coordinator and a Senior Gas Coordinator. Gas Operator 1 was hired by PG&E on September 17, 1974. He had successfully completed the PG&E required "Gas System Operator in training (OIT)" and had been working as a Gas Operator since May 5, 1986. He had completed many other courses in addition to the OIT

[171] Private internal network for use by employees only.

[172] GLS is a typewritten message that operators send to each other and to manned stations. NTSB Interview of Sr. Gas Coordinator December 16, 2010, page 14.

training. He was re-qualified for three of the four PG&E required operator qualification "covered tasks" on October 9, 2006, and completed the fourth covered task on June 3, 2009.

Gas Operator 2 was hired by PG&E on June 18, 1979. He had successfully completed the PG&E required "Gas System Operator in training (OIT)", in addition to many other courses and has been working as a Gas Operator since October 18, 2007. He was qualified for three of the four PG&E required operator qualification "covered tasks" for gas system operator on March 12, 2009, and completed the fourth covered task on April 28, 2009.

Gas Operator 3 was hired by PG&E on December 8, 1983. He had successfully completed the PG&E required "Gas System Operator in training (OIT)", in addition to many other courses and has been working as a Gas Operator since March 1, 2001. He successfully completed the four PG&E required operator re-qualification "covered tasks" for gas system operators on March 19, 2006, and June 30, 2009.

The Two Gas Coordinators acquired their trainings through OJT. Prior to becoming a Gas Coordinator, each of the individuals had to job-shadow a qualified journeyman at the control room console for 6-9 months, in addition to an on-going training whenever a station is modified or added to the pipeline system. The Senior Coordinator completed the OIT and was a Gas System Operator prior to promotion to a Coordinator position. In addition, the Gas Coordinator had to successfully complete and pass an initial and subsequent OQ written test and simulation evaluation every five years.

O. Analysis of the Response at Milpitas Terminal and Gas Control Center to the Loss of Pressure Control

The decades old local control system at Milpitas had been upgraded multiple times from the original manual system to a fully automated terminal that is managed from the Gas Control Center in San Francisco through the SCADA system. The modifications were not always executed properly which resulted in poorly made electrical connections, improperly labeled circuits, missing wire identification labels, aging and obsolete equipment at the end of useful life and inaccurate documentation.

On September 9, 2010, at 5:21pm,[173] about 20 minutes after the temporary mini-UPS units were installed at Milpitas Terminal, automatic pressure control was lost. This may be attributed to an intermittent short on a piece of wire in the pressure feedback circuit in the Control System equipment enclosure which contains hundreds of wires.[174] The short started a cascade of failures in the gas pressure sensors and pressure controls which lasted for over 3 hours. The pressure feedback value received by the controllers was zero or low which caused the automatic pressure controllers to drive the regulating valves to 100% open. This caused the outgoing gas pressures in the pipelines from Milpitas Terminal to rise. Because of the malfunctions at Milpitas, the Gas Operators in San Francisco lost the ability to monitor and control the valves at Milpitas Terminal with the SCADA system displaying inaccurate information. The Gas Technician at Milpitas began to manually apply valve pressure gauges to verify and report pressure readings and positions of regulating and monitoring valves to Gas Operators at Gas Control Center. The Gas Technician was instructed to manually close certain valves and lower monitor valve set points. About 40 minutes after pressures began rising in the gas discharge header at Milpitas Terminal, Line 132 ruptured. Line 132 originates from this discharge header.

The three Gas Operators in San Francisco SCADA center were already burdened with two other problems, one in Berkeley[175] and the other in San Ramon[176] on the afternoon of September 9, 2010. A rotation exercise from the primary Gas Operations Center in San Francisco to the alternate control center in Brentwood was scheduled in advance to take place that day during the second shift at 6:00pm. The 6:00pm crew was already in position at the backup location[177] but rather than risk a new crew taking over in

---

[173] NTSB_035-011, alarm logs.

[174] NTSB Interview of Construction Lead September 16, 2010, page 10.

[175] NTSB Exhibit 2Y Addendum, 4:52:43 P.M. , page 62.

[176] *Id.*, 4:14:06 P.M. page 48.

[177] NTSB Interview of Sr. Gas Coordinator, September 16, 2010, page 19.

the middle of an emergency, the crew that had already been on duty for 12 hours stayed in place in San Francisco while the backup crew drove back to San Francisco.[178]

Changes in pressure propagate slowly along any large high pressure gas pipeline. It took about 7 minutes for the pressure change at the rupture site to reach the nearest sensors downstream at Martin Station and appear on the Gas Operators' SCADA screens.[179] Gas Operators are trained to evaluate, acknowledge and respond to an alarm or observed disturbance within 10 minutes of receiving a notification.[180] Additionally, the Gas Operators have become conditioned to experiencing "gremlins"[181] and anomalies[182] in the SCADA data so they tend to suspect any large abrupt changes until it can be verified. Alarm messages flood in every minute, most of which are insignificant. Some of the SCADA "gremlins" and anomalies are generated by aging, defective SCADA equipment that has been installed at some remote sites. Sometimes the anomalies or alarms are caused by field technicians working on a sensor without clearance from Gas Operators,[183] which is a violation of PG&E company policy.

About 18 minutes[184] after Line 132 ruptured in San Bruno, some of the Gas Operators relying on their SCADA information were convinced that a rupture had occurred in San Bruno but were not able to identify the exact location of the rupture. Initially, some of the Gas Operators disagreed about how to interpret the SCADA data they were viewing.

---

[178] NTSB Interview of Gas Operator 1, January 6, 2011, page 24.

[179] *Id.*, page 28.

[180] *Id.*, page 31.

[181] *Id.*, page 20.

[182] NTSB Exhibit 2Y Addendum, 3:25pm, Sr. Gas Coordinator: "So whatever it was, it was an anomaly, an exception, and so we get these things. Usually every Monday there's a list of exceptions that the tech reviews to see if there's outage or norm."

[183] NTSB Addendum to Exhibit 2Y – Audio Enhanced Transcript of SF Control Room Logs, page 59 at 4:49 :40 pm,

[184] NTSB Exhibit 2Y, San Francisco Control Room Transcripts, page 148. 6:29:22, "We have a break at San Bruno with flames."

When monitor and control was lost at Milpitas Terminal, Gas Operators were communicating with the Gas Technician at Milpitas in a frantic effort to verify, report and manually operate some regulating valves and reduce pressures. The Gas Operators relied on pressure readings at locations several miles downstream of the Milpitas Terminal which are not fully indicative of the discharge pressure out of Milpitas Terminal. Meanwhile, the Contract Engineer and Construction Lead at Milpitas were troubleshooting the electrical problem at Milpitas Terminal for about three hours. They were trying to find which one of the many hundreds of wires was shorted. About 8:40pm, the system resumed normal operation with the exception of three pressure controllers which continued to malfunction. The short was found in wiring which could have been jostled while connecting the mini-UPS devices earlier that day.

The problem at Milpitas on September 9, 2010 was that the 24 Volt supplies PS-A and PS-B were not delivering their full rated 24 volts because of some excessive load, which is attributed to a short. So the electronics in the pressure instruments malfunctioned allowing erroneous currents to flow in the loops. When the voltage was very low, no current flowed in the loops at all and the controllers calculated a negative 200 PSI. The pressure controllers reacted to this very low pressure feedback by commanding the regulating valves to open 100% allowing the pressures to rise at the Terminal and in the lines leaving it.

The investigation uncovered that while many of the pressure data were not being displayed to the Gas Operators in San Francisco or the Gas Technician at Milpitas, some of those values were measured by redundant sensors and were actually available and being captured in the SCADA database.[185] The data from those redundant pressure sensors within Milpitas Terminal that had not failed were accurately sensing and recording pressure data but the data was not used by the computers to calculate the flow values and was not displayed on the SCADA screens or on the mimic panel at Milpitas Terminal. Had the control system been designed in compliance with modern design

[185] CPUC_188-13 pressure records and NTSB Interview of Supervising Engineer, April 20, 2011.

standards from ISO,[186] IEC[187] and UL[188] the Gas Operators would likely have been able to view the pressures at Milpitas throughout the episode. Additionally, the current PLC at Milpitas does not appear to have been programmed to recognize the negative pressure values as a failure in the pressure feedback circuit and then override the pressure controller outputs. That would have prevented or minimized loss of pressure control.

P. Summary of Findings on SCADA and Control System at Milpitas Terminal and Gas Control Center

1. Over decades of updates and revisions to the controls and SCADA at Milpitas, the integrity of documentation, wiring connections, identification of electrical components, and the equipment itself had deteriorated and increased the chance of an incident.
2. A pattern emerged from the interviews conducted after the event that some PG&E personnel have little recognition that they were working with a very critical system that demands a high level of care in planning and execution of their work.
3. The "glitches" and anomalies that the Gas Operators' encounter in their SCADA data have caused them to be extra cautious when observing unusual data in order to give themselves time to assess whether that data is "real."
4. The electrical, pressure control, and SCADA problems at Milpitas contributed to Line 132 pipe rupture, even though the recorded pressure at Line 132 did not exceed its established MAOP.
5. The Gas Operators are burdened with too many unnecessary alarm messages that increase the risk of an important alarm not being correctly handled.

[186] International Organization for Standardization.

[187] International Electrotechnical Commission based in Geneva, Switzerland.

[188] Underwriters Laboratories.

6. The design of the controls at Milpitas and of the SCADA system did not take advantage of redundant pressure data available in the system to increase reliability and safety.
7. The SCADA system does not incorporate a leak or rupture recognition algorithms. Such a system would require more and closely spaced pressure sensors.
8. The PLC can be programmed to recognize that negative pressure values are erroneous and then intervene to prevent the valves from opening 100%. Those safety considerations had not been programmed into the PLC.
9. The three pressure controllers which malfunctioned on September 9, 2010 are still in service and have not been replaced despite the fact that the reason for their malfunction has not been identified. Given the risks from uncontrolled pressures at Milpitas and the relatively insignificant cost of these controllers, a prudent measure would have been to remove them from service and replace them with new units.
10. There was no "Method of Procedures" established for transfer and commissioning of the electrical loads from the old UPS to the temporary UPS devices and inadequate planning to anticipate "what if scenarios" and how to proper contingency plan to mitigate any abnormal operating condition that may arise.

There are no specific requirements in the federal or state codes which address the above conditions. However, PG&E allowed these deficiencies to exist and jeopardizes the safety of its system. PG&E is therefore in violation of Public Utilities Code Section 451.

Q. Post-Incident Drug and Alcohol Testing

PG&E performed post-incident drug testing of three PG&E employees and PG&E contractor working on the UPS Clearance at the Milpitas Terminal. The drug testing was administered by a third party independent laboratory on September 10, 2011 between 3:36am and 5:21am and all four individuals tested negative.

The post-incident alcohol test of the same four individuals was performed on September 10, 2011 between 3:10am and 5:02am. PG&E stated that the testing was delayed because PG&E personnel at Milpitas Terminal, after the pipeline rupture in San Bruno, where focused on determining the cause of the power failure and pressure increase, and regaining SCADA data and pressure control at Milpitas.[189] PG&E claimed that these efforts at Milpitas delayed PG&E's Operations' awareness that there was a potential connection between the Milpitas event and the rupture on L-132, which further delayed the decision to conduct post-incident drug and alcohol testing.

Title 49 CFR 199.105(b) states in part:

> (b) Post-accident testing. As soon as possible but no later than 32 hours after an accident, an operator shall drug test each employee whose performance either contributed to the accident or cannot be completely discounted as a contributing factor to the accident.

Title 49 CFR 199.225(a) states in part:

> (1) As soon as practicable following an accident, each operator shall test each surviving covered employee[190] for alcohol if that employee's performance of a covered function[191] either contributed to the accident or cannot be completely discounted as a contributing factor to the accident…
>
> (2)(i) If a test required by this section is not administered within 2 hours following the accident, the operator shall prepare and maintain on file a record stating the reasons the test was not promptly administered. If a test required by paragraph (a) is not administered within 8 hours following the accident, the operator shall cease attempts to administer an alcohol test and shall state in the record the reasons for not administering the test.

According to PG&E, the personnel at Milpitas were focused on determining what happened at Milpitas during the UPS clearance work which delayed their determination

[189] NTSB_045-002 on why alcohol testing was performed after 8 hours.

[190] 49 CFR 199.3 defines *covered employee* as a person who performs a covered function, including persons employed by operators, and persons employed by such contractors.

[191] 49 CFR 199.3 defines *covered function* as operations, maintenance, or emergency-response function regulated by parts 192, 193, or 195 of this chapter that is performed on a pipeline or on an LNG facility.

of potential connection to the pipeline rupture in San Bruno. However, it was apparent from the PG&E Gas Control Logs transcript that they were aware of pressure increases in the Peninsula transmission lines that occurred while performing the UPS clearance which, in itself, should have been a determining factor of the potential connection to the L-132 rupture. Also, review of the transcripts of the recorded phone calls of PG&E Gas Control Operator shows that Gas Control Operator informed a PG&E employee, who later reported at Milpitas Terminal, that the UPS work could not be discounted as a possible cause of the San Bruno rupture.[192] Instead, PG&E claims to have made this determination approximately 6 hours after the rupture.

The Code of Federal regulations requirement for post-accident alcohol testing clearly requires that an alcohol test be administered within 2 hours, but no later than 8 hours following the accident. The operator is also required to maintain a record documenting the reason(s) for the delay in performing the post-accident alcohol test, and if not administered, the reason for not performing the test. The post-accident alcohol testing for the Milpitas Terminal personnel was not performed until approximately 9 hours after the rupture in San Bruno. PG&E did not have records to show compliance with Part 199.225(a)(2)(i) documenting the reason for the delay in performing the post-accident alcohol testing.

[192] NTSB Exhibit 2Y, PG&E Gas Control Operator Logs, September 9, 2011, page 213 lines 13-17.

VIII. Emergency Response

A. Summary

The CPSD's investigation uncovered multiple deficiencies in PG&E's emergency response procedures in areas including training, geographical area monitoring, coordination with internal personnel, coordination with external agencies, and emergency response decision-making. PG&E first responders at the scene of the incident could not identify the cause of the fire.[193] PG&E offered no specific training for its first responders on how to recognize the differences between fires of low-pressure natural gas, high-pressure natural gas, gasoline fuel, or jet fuel. PG&E's procedures did not assign its control room operators specific regions to monitor; rather, each operator decided which regions he or she preferred to look at, making duplicative efforts and neglect of certain regions possible. Duplicate and/or incorrect information to the Control Room, Dispatch, and others was repeatedly transmitted and acknowledged. PG&E did not notify emergency officials upon recognition of a potential line rupture. The operating supervisor and control room operators had the authority to make the decision to dispatch crews to shut valves, yet no decision was made by either.

PG&E took 95 minutes to isolate[194] the rupture. Although no specific regulations exist pertaining to emergency response time, the investigation found that the time for isolation could have been reduced had PG&E installed remote control valves (RCVs), automatic shut-off valves (ASVs), and/or appropriately spaced pressure and flow transmitters throughout its system to allow them to quickly identify and isolate line breaks.

---

[193] PG&E employees who are dispatched to the scene of an incident to investigate are referred to as first responders.

[194] The term isolate in the context of the rupture and this report is defined as the closing of valves V-38.49 upstream and valves V40-05 and V40-05-2 downstream, effectively isolating the rupture site from a source of gas.

PG&E violated Parts 192.605 and 192.615 pertaining to emergency response and the Public Utilities Code Section 451 for inadequately responding to a major incident and jeopardizing public safety.

B. Background

1. PG&E's Operations

As described in the SCADA section of this report, Gas Control monitors and controls the transmission and distribution system through SCADA, establishes and changes alarm settings, responds to alarms, maneuvers pipeline valves remotely, and maintains contact with Dispatch and field personnel. Members of the Gas Control team are referred to as gas controllers, gas control operators, control room operators, or gas system operators.

Concord Dispatch, commonly referred to as "Dispatch", is one of PG&E's central dispatch centers, whose territories include the Peninsula gas transmission system. Both routine and emergency calls involving PG&E's gas and electric systems come into Concord Dispatch, who then assigns the appropriate PG&E responder to address the situation. Dispatch's roles include receiving and distributing information to the control room and field personnel. Members of Dispatch are referred to as dispatchers.

2. Valves: Manual, Automatic Shut-off, and Remote Control

A manually operated valve is a valve that requires field personnel to be physically present at the valve site for operation. During normal operations, valves are operated in the open position. To cut off the gas source feeding the ignition of gas, a procedure commonly referred to as "isolating a rupture", valves immediately upstream and downstream of the rupture must be operated to the closed position. The time required to close a manually operated valve is dependent on the time it takes to recognize that a closure is needed, the time to dispatch personnel to the site, the time for personnel to arrive on site, and the time to manually shut the valve.

A remote control valve (RCV) is a valve that can be operated remotely from a control room distant from the actual valve. When a control room operator has monitored pipeline data and has determined that a valve needs to be closed, he or she can make the command to close the valve remotely. The time required to close a valve is dependent on the time it takes to recognize that a closure is needed, the time the control room operator takes to make the call to shut the valve, and the time for the valve to physically shut. An RCV can close shut in 10 minutes if no on-the ground confirmation by personnel is required.[195]

An automatic shut-off valve (ASV) is a valve that is designed to stop the flow of gas without human intervention based on established criteria. Pipeline sensors sense the pressure and flow rate of gas. When the established criteria for the ASV is met, like those set for a pipeline rupture, the valve closes. The isolation of a rupture does not require an operator to determine the location of a leak. The flow sensors will relay information to the actuators which will then activate and close the valves based upon predetermined criteria. The time required to close an ASV is dependent on the time it takes the sensors to pinpoint and recognize an abnormal flow conditions, the time for the sensors to relay the information to the actuators, and the time for the valve to physically shut.

The main benefit of an ASV or RCV over a manually operated valve is that a rupture may be isolated sooner, limiting the amount of natural gas release after a rupture has occurred. It may also increase the public's perception of safety knowing that gas can be shut off sooner. Decreased time to isolate a rupture also limits the time that residents, first responders, and properties are in proximity to gas and possibly flames.

Major concerns regarding ASVs are that they may trigger and close when closure criteria are meet, but are not triggered by an emergency condition, e.g., during heavy flow in winter months. Newer ASVs have the ability to send an alarm before tripping and closing, giving the operator an option to review operating data before deciding whether to allow or cancel the imminent valve closure.

---

[195] Remotely Controlled Valves on Interstate Natural Gas Pipelines, September 1999, U.S. DOT, page 16.

Several challenges arise when replacing manually operated valves with ASVs or RCVs. ASVs and RCVs require more space to accommodate additional equipment such as actuators, pressure and flow sensing devices, and telecommunications equipment. In highly populated urban areas, finding space to add or even relocate a valve may be difficult. The cost of retrofitting a manually operated valve with an RCV or ASV can range from $100,000 to $1,000,000. Retrofitting valves on an existing pipeline may also require shutdown of the pipeline, introducing potential reliability issues.

Some operators may argue that the benefits of installing ASVs or RCVs do not outweigh the financial costs and challenges faced during installation. The vast majority of injuries, fatalities, and property damage associated with a catastrophic pipeline incident occur within the first few minutes of the event, well before activation of ASVs or RCVs are possible.[196] Automatic shut off-valves and remote control valves will not prevent a pipeline rupture from happening and may not lessen any related injuries or property damage.[197] In the DOT's 1996 report, the DOT acknowledged that there had been insufficient studies on the reduction of property damage with the use of RCVs and ASVs. They also acknowledged that there was insufficient data to establish an appropriate standard time to isolate a ruptured pipeline section.

Part 192.935(c) requires operators to install ASVs or RCVs based on a risk analysis that proves the use of an ASV or RCV would be an efficient means of adding protection to an HCA in the event of a gas release. The operator must consider swiftness of the leak detection and pipe shutdown capabilities, type of gas being transported, operating pressure, rate of potential release, pipeline profile, potential for ignition, and location of nearest response personnel.

In a 1996 internal memo, PG&E described its investigation of the use of RCVs and ASVs throughout its transmission system. It was PG&E's unwritten policy to install

---

[196] AGA White Paper Automatic Shut-off Valves (ASV) and Remote Control Valves (RCV) on Natural Gas Transmission Pipelines, March 2011, page 16.

[197] *Id.*, page 3.

RCVs when an existing major control station was upgraded or built and to install ASVs only in pipelines where alternate sources of supply were available and a false trip would not cause a serious impact to critical gas deliveries but a legitimate trip would minimize the gas release and possibly reduce property damage.[198] In its system, there were no major problems with the RCVs, but several ASVs were removed from the system due to false trips. PG&E had concerns about installing more ASVs until more reliable and commercially available line break controls were developed. PG&E had no concerns with RCVs and recommended they consider installing more in the future.

In June 2006, a senior consulting engineer at PG&E wrote an internal memo establishing company guidelines for consideration of ASV or RCV installation.[199] After reviewing several industry papers, he concluded that using ASVs or RCVs as a "preventive and mitigative measure" had little or no effect on increasing human safety or protecting properties, therefore did not recommend using ASVs or RCVs as a general mitigation measure in HCAs.

PG&E currently has 310 remote control valves and 8 automatic shut-off valves in its transmission system.[200] Of the 310 remote control valves, about 20% are main line isolation valves and 80% are regulating or gas routing valves within stations.[201] Following the San Bruno incident, PG&E had plans to engage a third-party firm to examine the requirements of PG&E's system, benchmark PG&E's practices against those of other pipeline operators, and assess the potential to replace or retrofit manually operated valves with remotely operated or automatic shut-off valves, as well as add new valves.[202]

---

[198] NTSB Exhibit 2DY: PG&E June 24, 1996 Memo Re: Remote/Automatic Valves dated June 24, 1996.

[199] NTSB Exhibit 2Q: Senior Consulting Engineer RMP-06 Memo to file and supporting documents, pages 5-7.

[200] NTSB_054-006.

[201] CPUC_030-02.

[202] Letter to Paul Clanon, dated October 25, 2010. Re: Updates on Natural Gas Transmission System, page 2-1.

Part 192 has requirements on spacing between sectionalizing block valves on transmission pipelines. Part 192.179 requires that each point on a pipeline in a Class 3 location must be within 4 miles of a valve. Segment 180 on L-132 was in a Class 3 location and was less than a mile away from each of the manual valves that were operated to isolate the rupture.

3. Industry Standards for Response Time

In NTSB's Final Accident Report, the "NTSB concluded that the 95 minutes that PG&E took to stop the flow of gas by isolating the rupture site was excessive."[203]

Part 192.615(a)(3)(iii) requires an operator to establish an Emergency Plan that ensures "prompt and effective response" to emergencies. Some states have established requirements for operators to respond by a specific set timeline. For example, Missouri requires a response time of 2 hours for outside odor calls. Kansas established a standard requiring a utility to respond to at least 92% of emergency reports within 60 minutes. Massachusetts requires each jurisdictional gas company to respond to certain odor calls in one hour or less. In each of these cases, the terms "response time" or "respond to" are not clearly defined. It could vary in definition, from acknowledging the alarm, or arriving at the incident scene, to closing the valves if necessary. Also not specifically addressed are a multitude of variables including severity of the leak, vintage and material of the pipe, weather and traffic conditions, proximity to nearby personnel and equipment, utility resources, and the time of day. At the time of the incident, California did not have specific requirements for response time.

The investigation found that the response time for shutting off the valves to isolate the rupture would have been reduced if PG&E had created and followed better procedures resulting in clearer internal coordination and decision-making. The response time could also have been reduced by installation of closely spaced pressure monitors, installation of ASVs and/or RCVs.

[203] NTSB Report, page 102.

C. PG&E's Emergency Response

1. PG&E's Actions

PG&E received numerous high-high alarms on the three Peninsula transmission lines (L-101, L-109, L-132) from 5:23pm leading up to the rupture at 6:11pm. Upon discovery of the first alarm during that time frame, Gas Control contacted a Milpitas Station Technician to discuss and analyze the alarms. Both parties concluded that the regulating valves had swung wide open. Gas Control reported that they were unable to see accurate pressure or valve positions on their console. The Milpitas Terminal Technician, with Gas Control's approval, reduced the set point of the monitor valves to 370 psig to limit the line pressures.

The pipeline ruptured at 6:11pm. At 6:12pm, SCADA showed the upstream pressure at Martin Station on L-132 had decreased from 361.4 psig to 289.9 psig. At 6:15pm, SCADA showed a low-low alarm at Martin Station that indicated a pressure of 144 psig on L-132. Per PG&E's procedure, members of Gas Control attempted to troubleshoot the alarms by examining the pressures and conditions at different stations. At 6:18pm, PG&E Dispatch was notified of a fire in San Bruno by an off duty PG&E employee who speculated a jet crash. The dispatcher responded that they would notify a supervisor.

At 6:21pm, an off-duty GSR called into Dispatch alerting them that there was a fire in San Bruno that appeared to be gas fed. The dispatcher responded that he would send a GSR out to investigate. At 6:23pm, the Senior Distribution Specialist called Dispatch, reporting that he was heading to the reported explosion. At about the same time, Dispatch called a GSR working in the San Bruno area and instructed him to go to Sneath and Skyline in San Bruno to investigate the reported explosion. At 6:25pm, Dispatch called the Peninsula On-Call Supervisor to give him a heads up about the incident.[204] He responded, "I'm probably on my way." At 6:27pm, while Gas Operators 1

[204] Commission Examination Under Oath of PG&E Gas Crew Foreman, page 11.

and 2 were still in the process of determining the cause of the alarm, Dispatch called Gas Operator 3 to inquire if they noticed a loss of pressure in San Bruno. Dispatch advised about large flames and that a GSR and a Supervisor were heading to the scene. Gas Operator 3 responded that they had not received any calls yet. At 6:28pm, the Gas Controllers discussed the low-low pressure alarms amongst themselves and associated the reports of the fire at San Bruno with the pressure drop at Martin Station. At 6:29pm, a Gas Controller had mentioned to a caller that pressure on L-132 had dropped from 396 psig to 56 psig and that "we have a line break in San Bruno… while we have Milpitas going down."[205]

Between 6:25pm and 6:40pm, the Peninsula On-Call Supervisor had separate conversations with both Dispatch and Gas Control to keep updated on the situation.[206]

At 6:30pm, Dispatch called the GSR to check on his status. The GSR was still in traffic at the time. The Measurement and Control (M&C) Superintendent of the Bay Area, who claimed to be on-call 24/7 to respond to any gas event within his area, arrived at the rupture site just after 6:30pm after seeing it on the news. At 6:31pm, Gas Operator 1 called Dispatch regarding the previous inquiry about the loss of pressure and speculated that PG&E's gas facilities may be involved in the incident. Dispatch responded to Gas Control that a radio news report claimed the fire was due to a gasoline station explosion. At 6:32pm, Gas Control left a message for San Francisco Transmission and Regulation Supervisor about the low-low alarm at Martin Station, and the possibility of a leak. At 6:35pm, the M&C Superintendent of the Bay Area called Gas Control to inquire about the fire and told them to call the superintendent of the region.[207] He then proceeded to the incident site. At about the same time, Mechanic 1 called Dispatch, saying that PG&E's transmission line ran through the scene of the fire and that the flame was consistent with ignited gas from a transmission line. As Mechanic 1 headed to the Colma yard (Yard), he

[205] NTSB Docket: San Francisco Control Room Transcripts, page 149.

[206] Commission Examination Under Oath of Gas Crew Foreman, page 17.

[207] NTSB Docket: San Francisco Control Room Transcripts, page 155.

was called by Mechanic 2, who was then told to head to the Yard. At 6:36pm, the San Francisco T&R Supervisor returned the Gas Control's call and told them to contact the Peninsula Division T&R Supervisor. The gas controllers had been coordinating with the Sr. Gas Coordinator to make the appropriate contacts.

At 6:40pm, after confirming the involvement of PG&E's facilities with Dispatch and Gas Control, the Peninsula On-Call Supervisor called M&C Mechanics 1 and 2 and told them to "get to the yard, get their vehicles and head in that direction (of the valves)."[208] At 6:41pm, the GSR and the Senior Distribution Specialist were at the scene of the incident and reported to Dispatch that the fire department did not yet know the cause of the flames. The GSR made Dispatch aware that there were gas transmission lines in the area. Dispatch conveyed to the GSR that a jet might have struck a gasoline station which in turn caused the gas line to blow with it. The GSR called the Gas Service On-Call Supervisor, and the Gas Service Night Supervisor, to let them know he was on site. The Gas Service Night Supervisor arrived on site later. At 6:48pm, the Senior Distribution Specialist told Dispatch, "We've got a plane crash" and "we need a couple of gas crews and electric crews."[209] Dispatch acknowledged the request.

Mechanic 1 arrived at the Yard at 6:50pm. Mechanic 2 arrived soon after. More internal contacts ensued. At 6:51pm, a Gas Control Operator claimed, "it looks like it might [be transmission], if anything, distribution."[210] At 6:53pm, the San Francisco Division T&R Supervisor communicated to Gas Control that he had crews responding, but they might be heading to Martin Station. At 6:54pm, San Bruno Police called Dispatch requesting gas support. Dispatch replied, "We know, they're out there already." Dispatch then told the Troublemen Supervisor about a plane that had crashed into a gas station, and asked for gas and electric utilities in the area to be turned off. The

[208] Commission EUO of Gas Crew Foreman, page 27.

[209] NTSB Docket: Transcribed Concord Dispatch Logs, pages 77-78.

[210] NTSB Docket: San Francisco Control Room Transcripts, page 185.

Troublemen Supervisor replied that he was notifying troublemen. At 6:57pm, PG&E's Operations Emergency Center (OEC)[211] was opened.

While watching the news on a television at the Yard, Mechanic 1 identified the location of the incident site and the nearest valves to be shut to cut off fuel to the fire. At 7:02pm, the San Mateo County Sheriff asked Dispatch if they were aware of the plane crash; Dispatch responded, "I'll go ahead and relay that message". At around the same time, Mechanic 1 called Dispatch and notified them of his plan to shut valves to isolate the rupture. At 7:06pm, Mechanic 1 called the Peninsula Division T&R Supervisor for authorization to shut the valves. The Peninsula Division T&R Supervisor approved. Mechanics 1 and 2 proceeded to the first valve location (containing valve V-39.49). Gas Control was continuously making and receiving calls to gather and relay information. At around 7:07pm, a Gas Control Operator mentioned that the M&C Superintendent of the Bay Area was on site but couldn't get close enough to the actual location itself because of the extent of the fire[212] and that "until the crew arrives, secures it and comes up with a plan, we're just going to continue to feed it."[213]

At 7:12pm, the Troublemen Supervisor told Dispatch about his plan to order a mandatory call out requiring all Colma Yard employees to report in. At 7:15pm, a Gas Control operator was noted saying, "The fire is so big I guess they can't determine anything right now."[214] At approximately 7:15pm, an FAA representative informed the M&C Superintendent of the Bay Area that there was no plane involved in the incident. At 7:16pm, Dispatch began to relay the Troublemen Supervisor's plan. Minutes later, the M&C Superintendent of the Bay Area instructed the Senior Distribution Specialist, who

[211] The OEC is used to direct and coordinate personnel necessary to assess damages, secure hazardous situations, restore service, and communicate status information. (As described in PG&E Emergency Response Plan 2011 Draft.)

[212] NTSB Exhibit 2Y: San Francisco Control Room Logs 09-09-10, page 230.

[213] *Id.*, page 233.

[214] *Id*, page 243.

was with him at the time, to call Gas Control and tell them the fire was gas related and to declare it a reportable incident.[215]

Mechanics 1 and 2 arrived at the first valve location at 7:20pm. At 7:22pm, the Senior Distribution Specialist contacted Dispatch and said that while unconfirmed, it looked like gas was involved. At 7:22pm, Gas Control told the Senior Vice President that the incident was likely to be an L-132 break although nothing had been confirmed. At 7:25pm, Dispatch informed Gas Control that the M&C Superintendent of the Bay Area was on scene and confirmed that the incident was a reportable[216] gas fire. Gas Control confirmed that L-132 was the involved line. At 7:27pm, the SF Division T&R Supervisor requested that Gas Control lower the pressure set points as low as possible at Martin Station to isolate L-132 from the north. At 7:29pm, Gas Control remotely closed the involved L-132 valves at Martin Station to cut off the feed of gas north of the rupture.

At 7:30pm, Mechanics 1 and 2 closed V-38.49. Then they proceeded to the nearest valve station north of the rupture.

By 7:42pm, firefighters were able to approach the fire which had decreased in intensity.

By 7:46pm, Mechanics 1 and 2 had traveled north of the rupture and closed valves V-40.05 and V-40.05-2 at Healy Station to isolate the rupture.

By 7:52pm, the two Mechanics closed the valve at District Regulation Station 190 at Glenview Avenue and San Bruno Avenue to prevent back-feed into Line 132.

Four distribution valves, including three buried valves,[217] were closed to isolate the distribution system by 11:32pm.

---

[215] CPUC_191-12.

[216] Reportable refers to an incident that meets Commission General Order 112-E reporting criteria. The incident is then reported to the Commission.

[217] NTSB Docket: Interview of Transmission and Regulation Supervisor, page 19.

2. Adequacy of PG&E's Emergency Response

The federal safety requirements for gas operators are stated in Part 192. Parts pertaining to emergency response include subparts 605 and 615, and 616. The Commission's governing rules over jurisdictional gas operators are listed in GO 112-E. The General Order incorporates by reference the regulations of 49 CFR Part 192. The General Order provides no additional supplements to the Federal Code in regards to emergency response.

a) 49 CFR Part 192.605 - Procedural Manual for Operations, Maintenance, and Emergencies

(1) Regulations

Part 605 addresses the need for gas transmission pipeline operators to prepare a manual of procedures for safely handling abnormal operations when operating design limits have been exceeded. The procedures must address how the utility will respond to:

- Unintended closure of valves or shutdowns
- Increase or decrease in pressure or flow rate outside normal operating limits
- Loss of communications
- Operation of any safety device
- Any other foreseeable malfunction of a component, deviation from normal operation, or personnel error, which may result in a hazard to persons or property.

The procedures require that the utility will ensure that normal operations have been restored, notify responsible personnel when notice of an abnormal operation is received, and periodically review the procedures and measure effectiveness, mitigating any deficiencies.

(2) PG&E's Procedures At the Time of the Incident

PG&E has procedures to address emergency response activities including one for responding to alarms on its SCADA system. The alarms indicate when the pressure in the system is abnormally high or low. The procedure indicates that Gas Control will analyze and respond to all alarms.

During the first ten minutes after alarm acknowledgement, Brentwood Gas Control[218] coordinates with System Gas Control and analyzes both upstream and downstream data points to help determine the cause of the alarm. Necessary corrective action is taken which may include remote operation, contacting appropriate field personnel, and continued monitoring.

During the second ten minutes after alarm acknowledgment, if personnel involved cannot agree on a course of action, the operations on-call representative is contacted. The Gas System Operations on-call supervisor then discusses and agrees to a course of action.

Each year the responsible maintenance supervisors will review the digital alarm responses. Upon completion of the review, requested revisions are implemented.[219] Upon completion of the review, Operations Planning and Control implements the requested revisions and update the digital alarm response database spreadsheet.

Following the incident, PG&E updated their Utility Procedure for handling emergency conditions.[220] The new procedure states that regarding high or low gas pressure events including breaks in gas transmission lines, if Gas Control calls, Dispatch will send a field employee to the location of the gas incident. The field employee will evaluate the situation and then notify his supervisor, Dispatch, and others depending on whether it is during or after business hours for further action.

PG&E trains their first responders to assess the situation on-site when they arrive at the incident scene. If additional help is needed, the first responder notifies his or her supervisor. If no additional help is needed, the first responder initiates a repair procedure.[221] Depending on the actual field condition observed, Gas Control and Dispatch

---

[218] Brentwood Gas Control is a fully redundant station with identical information as that in San Francisco's Control Room. (NTSB Exhibit 2CH: Interview of Wenzel, PG&E 1-5-11, page 14.)

[219] NTSB_053_001 PG&E's Alarm-Policy20_Gas SCADA System.

[220] NTSB_053-003 PG&E's Utility Procedure TD-6436P-12 (Handling Emergency Conditions Reported by Outside Agencies and Company Personnel).

[221] PG&E Academy, Company Gas Emergency Plan (CGEP), GAS_0911WBT_1st_Resp_Sup, Version 1, January 2010.

may have further interaction to dispatch additional field personnel or exchange information regarding the event.[222]

The local operating supervisor makes the decision to dispatch crews to shut off mainline valves in cases of emergency.[223] Gas Control has the authority to approve an emergency clearance [224] with verbal notification over the phone.[225]

District Personnel who could possibly be first responders (including managers, supervisors, mechanics, etc) are required to take an annual web-based training and evaluation to stay informed on any recent changes in the plan.

(3) Line Break Recognition

The time at which PG&E organizationally knew for a fact that a rupture existed along with its location is disputed. Immediately following first reports of the fire, PG&E was unable to confirm the existence or determine the location of the line rupture. Examples are listed below.

- By 6:18pm, Gas Operator 1 concluded there had been a rupture on a transmission line within a 12-mile corridor of the peninsula, but could not pinpoint its location.
- As of 6:31pm, Gas Control and Dispatch were still discussing the "gas station" that had blown up, a recurring rumor at the time. The location of the "gas station", i.e. the incident location, had yet to be determined, and was to be determined by the dispatched GSR.[226]
- At around 6:51pm a gas control operator claimed, "it looks like it might [be transmission], if anything, distribution ".[227] This shows his confusion as to whether or not transmission or distribution facilities were the cause of the large flames.

---

[222] NTSB_053-003.

[223] NTSB_035-013.

[224] A clearance is an action taken by the operator that affects gas flow, gas quality, or the ability to monitor the flow of gas.

[225] NTSB_003-001 S2. PG&E's WP4100-10.

[226] NTSB Docket: San Francisco Control Room Transcripts, page 151.

[227] *Id*., page 185.

- At 6:53pm, the San Francisco T&R Supervisor communicated to Gas Control that he had crews responding, but they might be heading to Martin Station. This indicates his uncertainty about what and where the actual catastrophe was.
- At around 7:20pm, the Senior Distribution Specialist told Dispatch that the incident was reportable. In a post-accident interview, he explained, "So, early on, people are running around saying, you know, they think it's a plane. So -- until we were completely sure, that's when I made the call."[228]
- PG&E did not close the remotely operated Martin Station valves on L-132 until 7:29pm.

Without tools such as appropriately spaced pressure and flow transmitters, PG&E was unable to pinpoint the rupture immediately after it happened. Such tools could have allowed PG&E to find the location of the rupture and respond by shutting L-132 valves at Martin Station and calling for manually operated valve closures within minutes of gas release. CPSD recommends that PG&E perform a study to provide Gas Control with a means of determining and isolating the location of a rupture remotely by installing RCVs, ASVs, and/or appropriately spaced pressure and flow transmitters on critical transmission line infrastructure and implement the results. PG&E is in the process of performing this study.[229]

b) 49 CFR Part 192.615 - Emergency Plans

(1) Regulations

Subpart 615 addresses the need for the operator to create an Emergency Plan. The Plan must include written procedures on how the operator will coordinate with fire, police, and other public officials in the event of an emergency. The procedures must provide for:

- Establishing and maintaining communication with fire, police, and other public officials

[228] NTSB Docket: Interview of Senior Distribution Specialist, page 10.

[229] CPUC_004-11.

- Prompt and effective response to different types of emergencies
- Emergency shutdown and pressure reduction in any section of pipeline necessary to minimize safety hazards
- Notifying appropriate fire, police, and other public officials of gas pipeline emergencies and coordinating with them both planned responses and actual responses during an emergency.

(2) PG&E's Procedures

PG&E's Emergency Plan consists of 2 parts: (1) Basic Plan (company-wide) and (2) Appendix (contains District/Division-specific information). Each PG&E transmission district is responsible for updating their own binders to include any changes received of the Basic Plan. The Basic Plan is reviewed by PG&E's Subject Matter Expert (SME) by August 31st of each year and contains procedures to address the applicable parts of 192.605 and 192.615.

(3) Internal Communication

PG&E's procedures for describing job duties and internal communication were deficient. Though PG&E's procedures for Dispatch and the Control Room mention the rules and responsibilities for the entity as a whole, there was no procedure that explicitly outlined each individual employee's roles, responsibilities, and lines of communication required in the event of an emergency. Multiple and redundant reports of the same events were allowed to pass through to Dispatch, potentially preventing critical information from being relayed. The geographical monitoring responsibilities in the Control Room were arbitrary. Modification of such procedures and structure may allow members of Dispatch and Control Room to operate more efficiently, especially during a large-scale emergency when time and communication are most critical.

The inefficiency and overload of calls incoming and outgoing could have prevented critical information from being relayed. Dispatch and Control Room were each handling a large number of calls, some of which conveyed information they had received before. Several SCADA operators contacted the same SCADA transmission and regulation supervisor but seemed unaware that the senior SCADA coordinator had

already made contact with the supervisor.[230] The large volume of calls may have put a strain in the telecommunications system. As mentioned by a first responder regarding his attempts to contact Dispatch: "It was very difficult to place a call. Multiple attempts on the cell phone were system busy, call failed."[231]

The process by which individual Gas System Operators monitor parts of the system was arbitrary and can lead to duplicative efforts and neglect of certain regions. The operators were not assigned specific geographic regions to monitor; rather, each operator decided which regions he or she preferred to observe at any particular time. Such arbitrary tracking can leave an operator out of the loop and parts of the system may not be monitored. For example, Gas Operator 3 answered a call from Dispatch asking about a pressure drop but could not supply the dispatcher with information because he was not aware that Gas Operator 1 and Gas Operator 2 were responding to the low-low alarms around the peninsula.[232]

(4) Coordination with External Agencies

No outgoing calls were made by PG&E to fire or police officials upon discovery of the incident. PG&E coordinated with fire officials at the incident site. Coordination between PG&E and external agencies by telephone was only initiated by the external agencies and was as follows:

> At 6:54pm, San Bruno Police called Dispatch indicating their need for gas personnel.[233]
>
> At 7:02pm, San Mateo County Sheriff inquired whether the power in the area had been shut off. They also asked PG&E if they knew about the plane crash.
>
> At 7:59pm the first call to Dispatch from San Mateo County Fire Department came in. The message was to inform PG&E of their command post being set up at Lunardi's Market.[234]

---

[230] NTSB Report, PB2011-916501, page 98.

[231] NTSB Docket: Interview of Senior Distribution Specialist, page 8.

[232] NTSB Exhibit 2CB: Interview of PG&E employee, January 6, 2011, page 23.

[233] CPUC_191-09.

PG&E's procedures do not allow its Gas Operators to maintain communication with external agencies without supervisor approval. This can potentially cause a delay in communication and coordination between the two. When asked if there was any procedure, or any consideration of outside communication to county fire dispatch to try to figure out if anything was going on out at the incident site, Gas Operator 1 replied, "No outside agencies are called unless the supervisor out in the field requests it. So until that supervisor requests it because they want boots on the ground, until that supervisor requests it, we make no calls."[235]

On June 8, 2011, NTSB recommended that PHMSA:

> Issue guidance to operators of natural gas transmission and distribution pipelines and hazardous liquid pipelines regarding the importance of control room operators immediately and directly notifying the 911 emergency call center(s) for the communities and jurisdictions in which those pipelines are located when a possible rupture of any pipeline is indicated. (P-11-2)

The NTSB believed this guidance should be codified as a requirement. CPSD concurred with NTSB's recommendation. On August 22, 2011, PG&E published a document titled Gas Control Room Process (911 Notification Process) pursuant to which PG&E Gas Control will notify the appropriate 911 agency whenever an incident has the potential of becoming an emergency operating condition that may affect the safety of the public, property, or environment.[236] PG&E will also examine industry best practices and incorporate them into its procedures accordingly.

(5) Line Break Isolation

The use of remote control valves and/or automatic shut-off valves in proximity to the rupture would have likely reduced the time to isolate the rupture. The rupture was isolated 95 minutes after first reports of the rupture. The valves that needed to be closed

---

[234] CPUC_191-10.

[235] NTSB Exhibit 2CB: Interview of PG&E employee, January 6, 2011, page 51.

[236] Re: NTSB Safety Recommendation P-11-3, dated August 26, 2011.

to isolate the rupture — V38.49, V-40.05, and V-40.05-2 — were manually operated valves. Like all manually operated valves, field personnel were required to be physically present at the valve location for closure and the valves could not be operated remotely. Remote control and automatic shut-off valves do not require personnel to be physically present, allowing operators to isolate a part of the system remotely, and thereby reduce the time for isolation.

In conjunction with the existing manually operated valves, closely spaced pressure transmitters would have likely allowed PG&E to determine the location of the rupture earlier, also reducing the time to isolate the rupture. PG&E did not have closely spaced pressure transmitters in the vicinity of the rupture site. Valuable time was spent trying to confirm the existence and location of the rupture. Closely spaced pressure transmitters could have given control room operators valuable real-time flow conditions of the gas, allowing them to better pinpoint the leak and decrease the time of isolation. As mentioned in the *Line Break Recognition* section above, CPSD recommends that PG&E perform a study to provide Gas Control with a means of determining and isolating the location of a rupture remotely by installing RCVs, ASVs, and/or appropriately spaced pressure and flow transmitters on critical transmission line infrastructure and implement the results.

(6) Line Shutdown Responsibility

The position responsible for dispatching crews to shut specific valves in the case of an emergency remains unclear. PG&E claimed that the local operating supervisor makes the decision to dispatch crews to shut off mainline valves in cases of emergency.[237] PG&E also claimed that Gas System Operators have the authority to develop and implement responsive actions in an abnormal or emergency operating situation, including with respect to remote and manual valve closures, pursuant to PG&E's gas emergency

[237] NTSB_035-013.

response plan, gas system clearance procedures, and SCADA system alarm limits policy and procedures.[238]

In a post-incident interview, the Peninsula On-Call Supervisor claimed that he had fulfilled his duties by telling Mechanics 1 and 2 to "get to the yard, get the equipment, and get in that direction (of the valves)."[239] He figured that by the time they got anywhere near the San Bruno pipeline that somebody else would be instructing them on which valves to shut and if it was okay to shut valves.[240] He explained, "It wasn't necessary for me to make that decision [referring to closing the valves]. These people who are experts at this, they were at my disposal."[241] He dispatched the crews but "did not tell them which valves to shut and when to do it."[242]

According to Mechanic 1, he had not been given instruction from anyone to shut the nearest manually operated valves. Mechanic 1 conveyed that he came up with the idea to shut the valves by combining what he saw on the news with his familiarity with the system. In Mechanic 1's post-accident interview, he mentioned that the Peninsula On-Call Supervisor told him "to come into the Colma Yard and stage there."[243] After identifying the rupture site on the news, he told the Peninsula Division T&R Supervisor that "they have me staged here, but I am going to go up and I know where the initial inlet valve is and I'm going to shut it off."[244] He also mentioned that after shutting valve V38.49, he had no instruction to head to Healy Station to shut the valves there; rather, he took his own initiative to do so.[245]

---

[238] CPUC_212-01.

[239] Commission EUO of Gas Crew Foreman, page 27.

[240] *Id.*, page 27.

[241] *Id.*, page 30.

[242] *Id.*, page 28.

[243] NTSB Docket: Interview of Gas Measurement and Control Mechanic, page 17.

[244] *Id.*, page 22.

[245] *Id.*, page 36.

The M&C Superintendent of the Bay Area trusted the SF Division T&R Supervisor to make the call. He claimed that around 6:30-6:35pm, "The battalion chief incident commander that I checked into made it explicitly clear to me that I had to shut the gas off because it was hampering his relief rescue and fire abatement efforts"[246] and that "…information coming to me through [the Senior Distribution Specialist] was that our transmission people and my transmission supervisor from San Francisco were on it. So I was very confident that they were going to have the transmission valves for that area secured shortly… I fully trusted [the SF Division T&R Supervisor] to do the right thing [and make the decision to ask someone to send personnel to close the valves]."[247]

In the SF Division T&R Supervisor's post-incident interview, he mentioned that no one directed the crew to shut the valves and that the crew acted on their own. When asked how everyone knew where to go, he replied, "Familiarity with the system."[248]

Assignments of responsibility need to be clarified and communication needs to be more effective. The on-call supervisor dispatched the crews to the site but did not instruct them to close specific valves. The mechanics believed they were to stage at the Yard until further instruction. Fortunately, the mechanics forewent waiting for official orders, and based their decision to close the valves on a television news report and familiarity with the system. The operating supervisor and control room operators had the authority to make the decision to dispatch crews to shut valves, yet no decision was made by either to do so. It remains unclear as to who is ultimately responsible for making the decision to shut specific valves in times of emergency. CPSD recommends that PG&E revise its procedures to clarify emergency response responsibilities.

---

[246] *Id.*, page 15.

[247] NTSB Exhibit 2DF: Interview of PGE employee, September 16, 2010, page 16.

[248] NTSB Docket: Interview of Transmission and Regulation Supervisor, page 10.

(7) First Responder Training

First responders would benefit from training to recognize and respond to gas ruptures and ignition of high-pressure natural gas. While GSRs respond to any leak,[249] there was no specific training for GSRs to recognize the differences between fires of low-pressure natural gas, high-pressure natural gas, gasoline fuel, or jet fuel. Although a GSR was dispatched to the incident site, he could not provide Dispatch with any new information on the cause of the fire or determine if PG&E's facilities were involved. CPSD recommends PG&E provide this training to its employees.

c) 49 CFR Part 192.616 – Public Awareness

Part 616 addresses the need for the operator to create a Public Awareness Program to educate the public and, of particular interest in this section, emergency response agencies. The operator must document required written procedures.

Pipeline Awareness Program for Pipeline Operators: American Petroleum Institute Recommended Practice 1162 (API RP 1162) was developed by representatives from natural gas and liquid petroleum companies and their respective trade associations with input from federal and state pipeline regulators. The Recommended Practice was released in 2003 and aimed to provide guidance to pipeline operators of petroleum liquids and natural gas pipelines to develop, actively manage, establish consistency, and allow for continuous improvement of their own Public Awareness Programs. API RP 1162 requires operators of natural gas transmission lines to deliver messages annually to emergency officials either through personal contact, distribution of printed materials, group meetings, or telephone calls. The message must include the location of transmission pipelines that cross their area of jurisdiction, and how to get detailed information regarding those pipelines.

In June 2005, developing and implementing a written public awareness program that followed the guidance provided in API RP 1162 became a federal requirement as

[249] NTSB Exhibit 2BG: Interview of PG&E employee, January 3, 2011, page 12,

part of 49 Code of Federal Regulations Part 192 for pipeline operators. One of the goals of the program was to enhance emergency response coordination with external agencies.

To comply with the federal requirement, PG&E developed their own Public Awareness Program which is documented in their Public Awareness Plan. PG&E's Plan regarding coordination efforts with Local and State Emergency Response Agencies included both baseline methods and supplemental methods. Per their baseline method, PG&E planned to annually communicate with the response agencies through targeted distribution of print materials or personal contact. Per their supplemental methods, PG&E intended to do emergency drills, hold emergency trainings and joint meetings, supply online resources, and provide wallet cards of emergency contact numbers as needed.

PG&E's actions of compliance were examined from 2008 through 2010 in San Mateo County. As part of their baseline program, PG&E coordinated with the Pipeline Association for Public Awareness (PAPA) to provide agencies with Emergency Response Guidelines annually.[250] The Guidelines included instructions on how to obtain detailed maps of transmission pipelines by using the DOT's National Pipeline Mapping System (NPMS) website. During First Responder Trainings provided to different agencies, PG&E mentioned the availability of NPMS. As part of their supplemental program, PG&E provided agencies First Responder Trainings from 2009 through 2010, invited them to Emergency Drills, offered website training, and issued wallet cards at events.[251]

After the incident, there had been concerns that first responder agencies were not aware of the location or specifications of PG&E's pipelines. On June 8, 2011, NTSB recommended that PHMSA do the following:

> Issue guidance to operators of natural gas transmission and distribution pipelines and hazardous liquid pipelines regarding the importance of sharing system-specific information, including pipe diameter, operating pressure, product transported, and potential impact radius, about their pipeline systems with the emergency

[250] NTSB_035-001, page 3.

[251] NTSB_016-011.

> response agencies of the communities and jurisdictions in which those pipelines are located. (P-11-1)

Since the incident, PG&E has taken additional measures to provide more information to external agencies. Upon the request of a first responder agency, PG&E will provide hard copy maps showing the location of PG&E's pipelines in the particular city, county, district, etc. The maps are clear and user-friendly at 24"x36" in size, with a scale of 1:24,000. The information on the maps includes pipeline route and line numbers, as well as valve and station locations. PG&E is also evaluating the utility and feasibility of using a secure Internet server that could provide first responders access to these maps and the related information.[252]

[252] NTSB_057-001.

IX. Safety Culture

A. Introduction

The report of the Independent Review Panel (IRP) executive summary asks, "How (does) the culture of an institution affect everything it does?" The report identifies factors that make an organization unique, including history, hierarchy, mission, leadership, experiences, attitudes, and values."[253]

Culture can be evaluated as: 1) what managers and teams pay attention to, measure, and control; 2) the ways that managers (particularly top managers) react to critical incidents and organizational crises; 3) managerial and team role modeling, teaching, and coaching; 4) criteria for allocating rewards and status; 5) criteria for recruitment, selection, promotion, and removal from the organization; and 6) organizational rites, ceremonies, and stories. [254]

The IRP brought up a number of concerns about whether PG&E's corporate culture provides for a high-functioning organization, capable of fulfilling its mandate for safe and reliable gas service. The report states that organizational culture is a function of how people interpret what leadership deems important.[255] In addition, one of the more powerful methods of maintaining an organizational culture involves the processes and behaviors that managers and teams pay attention to and the events that get noticed and commented on.[256]

The culture of a private organization and a public organization are inherently different because their primary goals are different.[257] The goals of a private organization

---

[253] IRP Report, page 6.

[254] Hellriegel, Don, Woodman, Richard W., and Slocum, John W., "*Organizational Behavior,*" Cincinnati, Ohio, South-Western College Publishing, 1998, 551. The description of these methods is based on Schein, *Organizational Culture and Leadership,* 223-243; Schein, Organizational culture, pages 109-119.

[255] IRP Report, page 50.

[256] Hellriegel, Don, Woodman, Richard W., and Slocum, John W., "*Organizational Behavior,*" Cincinnati, Ohio, South-Western College Publishing, 1998, page 551.

[257] Vasu, Michael L., Debra W. Stewart, and David G. Garson. Organizational Behavior and Public

are profit maximization and to do less is to fail to survive in the marketplace. The goals of a public organization are to serve a specific purpose with any profit-making opportunities secondary to that purpose. Due to its "regulated" status, PG&E Company appears to be a hybrid, whereby its mindset is to maximize profits as a privately held company; however, those profits are regulated and have to be authorized by a public body, the Commission. Another key difference between PG&E Company and a perfectly competitive firm is that PG&E could never "fail" and lose customers to a competitor.

The same corporate culture seems to run through both PG&E Corporation and PG&E Company, as evidenced in part by the fact that the Corporation and the Company held joint board meetings.

Although culture can be deeply rooted, PG&E's culture appears to have experienced swings over the past few decades. In 1988, the Commission changed the market for gas customers when it divided gas utility customers into core and noncore classes. By separating gas procurement from local gas transportation, the Commission sought to provide some of the larger commercial or noncore gas customers the opportunity to procure gas from a seller of their choice, thereby increasing competition in the natural gas procurement business. This act launched PG&E into a competitive environment with its noncore customers.

Deregulation of electric power as a commodity soon followed the deregulation of natural gas. In 1996, California deregulated the sale of electric power by passing AB 1890 (Ch. 854/96). PG&E's corporate culture seemed to take on the culture of a purely competitive industry, with greater reliance and focus on investors and the financial markets and affiliate business ventures for its profits rather than relying on the regulator. To diversify its revenue sources and not be so completely reliant on a soon-to-be competitive company, PG&E became the parent company for Pacific Gas and Electric Company (the regulated utility) and created or acquired other unregulated energy businesses. Regardless of its expanding business model, the new market structure still

---

Management. Marcel Dekker, Inc. New York, NY. 1990, page 5.

required PG&E Company to serve as the provider of last resort. On the one hand it was a budding competitive industry with all of the inherent risks, and on the other hand it still had to act as the provider of last resort as a regulated utility.

In April 2001, as a result of a dysfunctional electricity trading market where PG&E Company was forced to purchase short-term electricity at inflated prices, but precluded from passing its costs on to ratepayers due to statutory and regulatory constraints, PG&E Company filed for Chapter 11 bankruptcy. Because PG&E as a regulated service provider could not "fail," the Commission ratified a settlement agreement that was intended to stabilize PG&E over the next decade by providing dedicated assets to the utility, a guaranteed rate of return on equity, and a separate rate component to cover about $1 billion of the cost of the bankruptcy.[258]

As PG&E's culture was transitioning in the competitive environment, in 2002, the California Attorney General and the City and County of San Francisco filed complaints against PG&E Corporation for transferring assets from the utility to the parent company and to other non-regulated PG&E Corporation affiliates to shield the assets from utility losses during the period leading up to the California energy crisis. The formal complaint was that PG&E Corporation failed to provide adequate financial support to the utility in 2000 and 2001 during the energy crisis. No decision was rendered on whether PG&E's actions were unscrupulous; however, an arbitrator found that PG&E did not violate the Commission-approved holding-company agreements and the case was dismissed. Nevertheless, this led to the Commission amending the holding company rules that intended to ensure that PG&E Company was fully capitalized and not pillaged so it could maintain safe and reliable service.[259]

---

[258] The settlement agreement, approved in D.03-12-035, allowed PG&E to keep between $775 million and $875 million in "headroom" from 2003; increased the size of the regulatory asset from $1.75 billion to $2.21 billion; fixed PG&E's rate of return on equity at 11.22% for up to nine years; and proposed a statute that would dedicate a separate rate component so ratepayers pay the cost of the bankruptcy of about $1 billion over nine years.

[259] D.96-11-017, as modified by D.99-04-068.

PG&E Corporation leadership continued to primarily focus on financial performance, which significantly influenced the focus of PG&E Company. All other decisions, programs, or issues may have been raised in a manner that provided regulatory compliance; however, the main concern was the effect those decisions, programs, or issues would have on the company's return to shareholders. For example, when the IRP's interviewer asked the utility's upper management to describe the company's safety program, the executives did not speak of the safe and reliable natural gas operations and did not address public safety. The report notes that the leaders did not address potential risks to the public or what the company was doing to make public safety central to the organization. Instead, they articulated their views on worker safety and provided supporting data. The leaders described how a program of personal safety improves productivity and saves money. The panel concluded that, "Management has embraced an occupational safety culture because it's smart business, but seemed generally unaware of the quality of its pipeline integrity efforts."[260]

The focus on financial performance has proved somewhat successful in terms of the increased value to shareholders. PG&E Corporation, whose business is to ensure growth and returns for investors, saw significant increases in earnings since PG&E Company declared bankruptcy in 2001 through 2007.

[260] IRP Report, page 53.

Figure IX-1 Pacific Gas & Electric Corporation, Price per Share[261]

It is understandable that PG&E Corporation has a goal in growing its financial performance. It is also understandable that PG&E Company focuses on being financially healthy; however, its primary and overarching focus should be on the safe and reliable operation of the electric and natural gas pipeline facilities.

B. PG&E Company Management — Fiscal Priorities

An element of a company's culture is how it views its job; whether leadership as well as all employees possesses a consistent and unwavering understanding of its primary mission. PG&E Company leadership viewed its responsibility of providing safe and reliable natural gas service as contingent upon the Commission authorizing rate recovery. The IRP report described an interview where the interviewer asked executive leadership which factors would most positively affect safety in the future. The response given was the provision for the recovery of costs for safety improvements would be the most important factor.[262]

[261] http://moneycentral.msn.com/investor/charts/chartdl.aspx?symbol=us%3apcg, November 18, 2011.
[262] IRP Report, page 50.

A Commission audit shows that PG&E was provided rate recovery for pipeline transmission operations and maintenance; however, every year since 1996, PG&E Company spent 4.9% or $39 million less than the Commission authorized over the period 1997 to 2010.[263]

PG&E was unable to identify requests for the recovery of costs for safety improvements that the Commission denied. Instead, PG&E responded that a formal revenue requirement request and the underlying capital, operations, and maintenance expenditure requests do not exist. "Settlement agreements approved by the Commission were 'black box' in that they did not identify which specific work was funded or not funded. Thus, PG&E cannot identify requests for the recovery of costs for safety improvements to the natural gas transmission pipeline system that were denied by the Commission."[264]

PG&E Company's response lacks credibility. Although the settlement agreements aggregate costs into larger categories, PG&E possesses the granular elements that went into its cost-recovery requests. The cost-recovery requests had to have been tied to itemized expenditures in order for the PG&E representatives to ascertain how much they were willing to compromise or shift during Gas Transmission & Storage base rate case proceedings. A Commission audit used a "litigation forecast" that PG&E submitted as testimony supporting the Gas Accord IV settlement, which was a detailed forecast.[265] PG&E's supposed inability to provide a detailed response is especially unconvincing when compared to PG&E's ability to provide a detailed list of safety improvements that were compromised due to the Commission challenging or denying some of the costs.

---

[263] Overland Consulting, Focused Audit of Pacific Gas & Electric Gas Transmission Pipeline Safety-Related Expenditures for the Period 1996-2010, page 3-1.

[264] CPUC_198-07.

[265] Overland Consulting, Focused Audit of Pacific Gas & Electric Gas Transmission Pipeline Safety-Related Expenditures for the Period 1996-2010, page 2-10.

PG&E provided a detailed list of safety-related improvements with costs as low as $1 for items identified in its Pressure Testing Implement Plan.[266]

1. Organizational Impacts Due to Spending Reductions Were Not Important to Management

For businesses in general, what leadership deems important usually gets funded, while lower-priority items become stagnant, reduced, or eliminated. The IRP found that, "when top management focuses on financial performance and does not appear to be engaged in operational safety and performance, it affects the willingness of the organization to challenge the priorities or resources put in place by upper management."[267]

PG&E has focused on decreasing operational costs over the past 15 years at a minimum. After a GRC and PG&E Company has received permission to recover costs in its rates, PG&E benefits if it can reduce costs below the authorized amount because the Commission is generally precluded from asking for the money back if the company over-estimated its revenue requirement. This creates a greater incentive to optimize or squeeze costs for operations by reducing costs or increasing productivity to render a larger return on equity. A general rule of thumb is that a $12 million reduction in operations and maintenance expenses increases return on equity by 1%.[268]

a) Gas Transmission and Storage Operations

The Commission conducted a preliminary audit of PG&E's natural gas transmission and storage expenditures over the past 15 years to determine whether the amounts that the Commission authorized for gas pipeline safety investments were actually spent on safety investments. Authorized revenue was compared with actual costs for operations and maintenance expenses, capital expenditures, and rate-base

[266] CPUC_216-01Atch01, lines 74 and 79.

[267] IRP Report, page 52.

[268] Overland Consulting, page 5-2. $36 million in annual surplus revenues divided by 3% average Return on Equity surplus equals $12 million for each 1% change in return on equity.

expenditures. In addition, the audit compared authorized revenue requirements to actual revenue and actual return-on-equity to authorized levels.

The audit made the following findings regarding PG&E Company's gas transmission and storage operations:[269]

- Gas transmission and storage revenues were $430 million higher than the amounts needed to earn the authorized return on equity;
- Actual revenues exceeded authorized revenue requirements by $224 million between 1999 and 2010;
- Actual functional operations and maintenance expenditures were $43 million lower than adopted over the 12-year study period;
- Capital expenditures were $94 million lower than adopted between 1997 and 2000; and,
- Gas transmission and storage rates were not reduced in 2008 through 2010 to reflect the federal bonus tax depreciation adopted as part of the federal economic stimulus measures.

The Commission audit observed that the adopted rate base has generally been higher than the actual rate base. The adopted rate base exceeded the actual by an average of $67 million per year during 1998 to 2010.[270]

b) Pipeline Upgrades

In 2004, PHMSA established the Gas Transmission Integrity Management Rule (49 CFR Part 192, Subpart O), commonly referred to as the "Gas IM Rule." The Gas IM Rule specifies how pipeline operators must identify, prioritize, assess, evaluate, repair and validate the integrity of gas transmission pipelines that could, in the event of a leak or failure, affect high-consequence areas within the United States.

The audit revealed a low rate of increase in safety-related operations and maintenance expenses. Overall safety-related operations and maintenance expenditures increased at an annual rate of 4.1% because of the pipeline safety law. Transmission pipeline maintenance increased at an average rate of 1.2% between 1997 and 2009, even

[269] Overland Consulting, pages 5-2 and 5-3.

[270] Overland Consulting, page 5-6.

though maintenance requirements increase as facilities age.[271] PG&E has not adequately upgraded its pipeline infrastructure in part because, according to the report of the IRP, the vast majority of PG&E's transmission pipeline cannot be inspected using ILI tools. The IRP noted that since the inception of the Gas IM Rule, PG&E had made some investment in modifying the lines to accommodate ILI tools; however, when compared to the rest of the industry, PG&E was significantly behind. "As of 2010, approximately 17 percent of PG&E's overall pipeline transmission system can accommodate ILI tools and slightly more than 21 percent of its transmission pipeline system located in high-consequence areas can be inspected using ILI tools."[272] In contrast, about 50% of the combined Sempra Energy utilities' natural gas transmission pipelines can currently accommodate ILI tools. Approximately 80% of Southern California Gas Company's transmission pipeline located in high-consequence areas has been inspected using ILI tools.[273]

The IRP observed that PG&E's progress is dramatically less than the 60-percent in-line inspection average for cross-country natural gas transmission and 40-percent average for utilities with transmission and distribution facilities. "While it is difficult to compare efforts on the basis of percentages, all of the other utility companies with whom we spoke have made the investments to improve detection of threats."[274] The IRP noticed the inconsistency between PG&E's lackluster commitment to performing its core mission safely and reliably, and its vision to be the leading utility in the United States.

PG&E acknowledged cost constraints in its integrity management program. The audit showed that PG&E reduced integrity management expenses in three ways to meet its expense budgets in 2008, 2009 and 2010. First, the assessment methods for some projects were changed from in-line inspections to ECDA to reduce costs.[275] Second,

---

[271] Overland Consulting, page 3-8.

[272] IRP Report, page 51.

[273] Email from Sempra Government Affairs, November 11, 2011.

[274] IRP Report, page 51.

[275] Overland Consulting, pages 7-8, 8-10, and 9-19.

some integrity management expense projects were deferred to future years.[276] Third, PG&E changed the definition of the pipelines covered by integrity management rules in 2010 to reduce the scope of the integrity management program.[277]

PG&E Company's 2009 Investor Conference presentation included a slide on "Expenditures," which showed decreasing investments in gas transmission infrastructure; from $250 million in 2009 to $200 million in 2010. It also showed that it could be as low as $150 million in 2011, or at 2009 levels.[278] The IRP concluded that the capital investment by PG&E in the gas transmission pipeline system has been minimal. The IRP found that there was no plan to modernize the system and seek opportunities to improve the risk associated with operating the system. Instead, the focus was to provide funding to ensure compliance with the proscriptive aspect of the Pipeline Integrity rules.[279]

c) General Operating Costs

PG&E leadership launched a company-wide business and cultural transformation campaign to reduce operating costs and instill a change in its corporate culture, called "Transformation." On February 16, 2005, the Chairman of the Board, Chief Executive Officer and President (CEO) presented the idea of Transformation to the boards of directors. The board members discussed the extent to which the Transformation effort is self-funding. They were provided an estimate of target cost savings, and discussed the extent to which the Company expects to be able to reinvest those savings into the infrastructure.[280] As stated in the 2006 Annual Report, the reason for the investment in Transformation was, "If the actual cost savings are greater than anticipated, such benefits

[276] Overland Consulting, pages 7-8 and 7-10.

[277] Overland Consulting, page 9-19.

[278] 2009 Investor's Conference, February 26, 2009, page 27.

[279] IRP Report, page 82.

[280] PG&E Company Board Meeting, February 16, 2005, page 85.

would accrue to shareholders. Conversely, if these costs savings are not realized, earnings available for shareholders would be reduced."[281]

The metrics used to assess the success of Transformation and its resulting cultural change included timely bills, accuracy of outage restoration time estimate (electricity service), system average interruption duration and frequency, telephone service level, Diablo Canyon performance index, employee opinion, and employee safety. One metric was the cost of operations per customer. The goal for 2006 was 2% lower than the 2005 costs per customer. The goals in subsequent years were not available for this metric, although goals and actual achievements were available for all other measurement criteria.

Another metric used until 2008 to assess the success of Transformation was the J.D. Power and Associates rating of customer perception of PG&E Company, which surveyed utility customers' views about the company. On October 19, 2011, the CPSD requested the criteria that J.D. Power and Associates used to assess customer satisfaction. Instead of the actual criteria or survey subjects, PG&E provided press releases that disclosed the most significant items that affected customer satisfaction. The items that J.D. Power and Associates measured appear superficial and easy to manipulate.

Another Transformation metric, "Total energy availability," which is a composite of generation and procured energy availability, could relate to the reliability of electricity service (not tracked after 2008); however, none of the criteria pertain to the safe and reliable operation of the natural gas facilities. In addition, none of the metrics measured a change to the corporate culture that would place the operation of a safe and reliable system as a company-wide priority.[282]

Throughout 2006 and 2007, PG&E issued a press release, identified an expenditure of $50 million for Transformation in its annual report, and presented Transformation's expected benefits at investor conferences.[283] The PG&E CEO touted

[281] 2006 Annual Report, page 55.

[282] CPUC_216-01-03.

[283] PG&E forecasted "Net benefits anticipated as early as 2008 and beyond." Subsequent graphs showcase

"Transformation" as the key to being the "The Leading Utility in the United States."[284] The actual description of Transformation was ambiguous and the details were absent.[285]

The three-year Transformation campaign did not render an evident cultural change at PG&E. The only tangible benefit identified was a reduction in PG&E's revenue requirement for operating costs in the 2007 general rate case proceeding. PG&E claims that due to the Business Transformation program, it reduced its revenue requirements by $41 million in 2008 and another $56 million in 2009 (for a total of $97 million in the 2007 three-year general rate case).[286] Even with the reduction in revenue requirement, PG&E still under-spent its adopted functional operations and maintenance amount by $2.9 million in 2006, $2.2 million in 2007, and $3.5 million in 2008.[287]

PG&E's expected net savings and decreased capital expenditures were less ambitious than those expected in 2007; however, they still appeared to be significant. PG&E states that without these embedded benefits, their costs would be higher in 2009 and beyond. "Specifically concerning the 2011 general rate case period, but for Business Transformation, total company costs would have been an estimated $354 million, $363 million, and $373 million higher in 2011, 2012, and 2013."[288] If this was accurate, the associated budgeted categories should have been reduced by like amounts for ratepayers in the general rate case proceeding. Instead, PG&E said that any subsequent costs and

---

expected Net Expense Savings and Net Capital Expenditure Savings of up to: $520 million in 2009; $575 million in 2010; and, $600 million in 2011. PG&E Corporation: Preparing for the Future, "Investor Conference." April 4, 2007, pages 40-42.

[284] PG&E Investor Conference presentation. April 4, 2007, page 6 and Investor Conference, May 22, 2008, page 8.

[285] PG&E press release identifies the leadership goals as, "strengthening utility customer service, investing substantially in the utility's infrastructure, and securing the energy supplies necessary for a stable and clean energy future in California." PG&E Corp Review Strategy, Financial Outlook with Investment Community, March 1, 2006.
http://www.pgecorp.com/news/press_releases/Release_Archive2006/060301press_release.shtml

and "PG&E Corporation: Preparing for the Future, Investor Conference," April 4, 2007, identifies Transformation as, "Strategic Sourcing, Resource Management Centers, and PG&E Tomorrow," page 9.

[286] CPUC_216-04Atch01, page 12-9, lines 18-20.

[287] Overland Consulting, page 3-2.

[288] *Id.*, page 11-13.

savings associated with Transformation were embedded in the general rate case documents. It is difficult to determine whether Transformation achieved net benefits. A more in-depth examination of each line-of-business element of the general rate case would be necessary to determine actual downward or upward pressure on future rates that were attributable to the Transformation efforts.

In June 2007, the CEO presented a status report to the boards of directors of PG&E Company and PG&E Corporation that identified several areas of Transformation in which performance had fallen short of expectations. He recommended possible "adjustments" to the schedule. With a continued emphasis on earnings, he assured the board that these adjustments are not expected to impact PG&E Corporation's ability to meet 2007 earnings guidance, and that they are expected to have a minimal impact on customers. The CEO also stated that, "to the extent that these adjustments impact costs and benefits of Business Transformation, management would seek to offset or mitigate such impact by realizing improvements elsewhere in the business."[289] He did not elaborate on which areas of operations would be reduced or impacted to ensure the utility achieves the expected benefits of Transformation. He also did not discuss why there continues to be areas of alleged inefficiencies that can be captured as a cost-reduction measure to align planned benefits with actual realized benefits. Lastly and most notably, *there was no indication that any amount of savings was reinvested into the infrastructure*, as was suggested to the board in February 2005.[290]

The 2008 presentations from PG&E leadership did not mention Transformation or redesigning operations and culture around providing excellent customer service. Instead, the goals highlight that PG&E has a plan to "Deliver on its Financial Objectives."[291]

---

[289] PG&E Company, Board Meeting, June 20, 2007, page 391.

[290] PG&E Company, Board Meeting, February 16, 2005, page 85.

[291] PG&E Corporation, Investor Conference. May 22, 2008, and PG&E Corporation, Citi Power Gas and Utilities Conference. June 5 and 6, 2008. Washington, DC.

d) Reduction in Workforce

Leadership priorities in the PG&E Company's 2009 Annual Report emphasized decreasing operating costs. The introductory letter states that its forward-looking statements are subject to various risks and uncertainties, including whether the utility can maintain the cost savings that it has recognized from operating efficiencies that it has achieved and whether it can identify and successfully implement additional sustainable cost-saving measures.[292] The same report discloses that the utility accrued $38 million, after-tax, of severance costs related to the elimination of approximately 2% of its workforce.[293] It is unclear whether the reduction in workforce was part of the Transformation efforts, or whether it was a separate directive.

In response to a Commission data request, PG&E provided information on the workforce reduction and noted that the 2% reduction equated to about 409 employees; however, the actual number was closer to 445.[294] PG&E stated that in 2009 and 2010, it had reduced the size of its workforce through both voluntary and involuntary severances in order to focus its budgeted resources on performing the highest priority work. PG&E reported that the majority of affected employees were administrative and management personnel whose positions were being eliminated. Each line of business was asked to identify the number of positions that could be eliminated yet still deliver on the operational priorities of the line of business. There was no set number of eliminations expected or assigned. Senior management discussions were conducted to ensure the reductions were appropriate and the lines of business could still deliver.

Of the 445 reductions, PG&E stated that there were 10 voluntary reductions across various organizational units whose primary job function is related to PG&E's gas transmission pipeline system. In addition, there were two voluntary reductions in the

[292] 2009 Annual Report, page 13.

[293] 2009 Annual Report, page 7.

[294] CPUC_198-05.

Integrity Management team.[295] PG&E did not provide an accounting of the number of involuntary severances.

2. Dividends, Stock Repurchases, Bonuses, And Image Were Of Greater Importance to Management

PG&E Company is generally permitted to redirect funds. As such, it is difficult to identify, with any level of certainty, toward what purpose the under-expended funds for natural gas transmission and storage were redirected. Nevertheless, PG&E Company maintained quarterly cash dividends for common stock and cash dividends from retained earnings. In addition, it repurchased stock from PG&E Corporation or from a PG&E subsidiary, provided bonuses or "incentives" to management and employees, expended funds to enhance public perception of PG&E, and expended millions to affect ballot initiatives.

According to the Commission audit, gas transmission and storage operations have been highly profitable since the Gas Accord structure was adopted in March 1998. The actual return on equity averaged 14.2% during 1999 to 2010. PG&E's authorized return on equity averaged 11.2% over that same period."[296] Over the 12-year study period, gas transmission and storage revenues were $430 million higher than the amounts needed to earn the authorized return on equity, or an average of $36 million per year. Some of the possible redirections of operational revenues are described below.

a) Cash Dividends for Common Stock

Between 2005 and 2009, PG&E Company authorized a cash dividend in the aggregate amount of $2.7 billion. This amount increased in each consecutive year: in 2005, $476 million; in 2006, $494 million; in 2007, $547 million; in 2008, $589 million; and, in 2009, $624 million.[297]

---

[295] *Ibid.*

[296] Overland Consulting, pages 5-1 and 5-2.

[297] Source: Board meeting minutes.

b) Cash Dividends for Preferred Stock

The PG&E Company board declared cash dividends on the company's preferred stock for every quarter during the years 2005 through 2009.[298] The quarterly payments are a factor of a value specified in the company's Restated Articles of Incorporation. Absent the provisions of the Restated Articles of Incorporation, the amount declared for the preferred stock is unquantifiable. The 2010 Annual Report revealed that during each of 2008, 2009, and 2010, the utility paid $14 million of dividends on preferred stock. On December 15, 2010, three months after the San Bruno explosion, the board declared a cash dividend on its outstanding series of preferred stock totaling $4 million that was paid on February 15, 2011.[299]

c) Re-purchase Stock

On December 15, 2004, the board authorized PG&E Company or one of its subsidiaries to purchase shares of the company's issued and outstanding common stock with an aggregate purchase price not to exceed $1.8 billion, not later than December 31, 2006. By June 15, 2005, the company projected that it may be able to repurchase additional shares of common stock through the end of 2006 in an aggregate amount of $500 million and, as such, increased the amount of the common stock repurchase authorization for a total authorization of $2.3 billion. In addition, the board authorized designated officers to redeem additional shares of preferred stock.[300]

d) Long-term Incentive Plan

The 2006 Long-term Incentive Plan (LTIP) provides awards to top executives, including stock options, stock appreciation rights, restricted stock awards, restricted stock units, performance shares, deferred compensation awards, and other stock-based awards. The PG&E Company board meeting minutes state that the LTIP grants are consistent

---

[298] The only years for which the Commission possesses board meeting minutes.

[299] 2010 Annual Report, page 82.

[300] PG&E Company Board Meeting, June 15, 2005, page 125.

with the PG&E Corporation Nominating Compensation, and Governance Committee's stated long-term incentive philosophy of targeting 75th percentile award levels for top quartile performance.[301] The 2010 Annual Report states that the LTIP are share-based incentive awards.[302] The 2010 Annual Report notes that $57 million was provided in each year of 2008 and 2009, and $56 million was provided in 2010 to PG&E Corporation employees and non-employee directors.[303] It also states that there was no material difference between PG&E Company and the Corporation for the total expenses relating to LTIP compensation.

According to PG&E, all employees at the Officer, Director, and Senior Director level are eligible to receive an award each year. Below this level, 25% of senior-level individual contributors and Managers are eligible to receive an award. PG&E has provided a list of the positions and the value of the awards. A cursory review reveals that a significant portion, in the millions, has been awarded to the CEO. Additional significant individual awards in the hundreds of thousands have been provided to high-level employees. Out of 55 awardees on one list of grants, just three have a title or a department that reflects natural gas division work.[304] This is important because the IRP notes that PG&E Company "includes a number of individuals in top management with little or no previous experience in the natural gas industry and/or no direct operating experience. The main training, experience and professional careers of many in PG&E's top management are in telecommunications, finance and law, and they have not had operating roles where they could develop the requisite expertise in the reliability and safety aspects of a major gas or electric utility."[305]

---

[301] PG&E Company Board Meeting. October 19, 2005, page 155.

[302] 2010 Annual Report, page 79.

[303] *Ibid*.

[304] CPUC_198-11.

[305] IRP Report, page 50.

e) Additional Awards and Bonuses

PG&E Company provides a Short-term Incentive Plan, a "Pay-for-Performance" bonus, and a Reward and Recognition Program. On October 3, 2011, the CPSD requested information on all awards, either financial or intangible, and the qualifications or actions that would warrant the awards. PG&E Company's response only included information on the Reward and Recognition Program, which is the smallest and least significant of the awards. Most Reward and Recognition Program awards do not exceed $200 during a quarter.

PG&E does not provide a special reward for the discovery of a gas pipeline weakness, bad weld, or safety risk. According to PG&E, "discovering and correcting a pipeline weakness, a bad weld or a safety issue or risk is a core part of an employee's job function. PG&E's Reward and Recognition Program is not to recognize employees for meeting the essential functions of their job responsibilities."[306]

f) Environmental Clean-up

Some of the surplus funds could have been redirected toward environmental remediation obligations near the town of Hinkley, where PG&E had contaminated the groundwater with hexavalent chromium from a natural gas compressor plant resulting in a legal case and multi-million dollar settlement, which was not recoverable in rates. The original 1996 case ended with a $333 million settlement on behalf of more than 600 people. In 2006, PG&E agreed to pay $295 million to settle cases involving another 1,100 people. In 2008, PG&E settled the last of the lawsuits for $20 million.[307] [308]

---

[306] CPUC_198-24.

[307] "PG&E settles last chromium 6 case". Los Angeles Times: page B2. April 4, 2008.

[308] Overland Consulting references $191 million that PG&E included in transmission operations and maintenance expenditures over the period 1997 to 2010 at page 5-3. Note: the damages awards referenced in the text were charged to administrative and general expenses, not transmission operations and maintenance expenditures and are in addition to the $191 million.

g) PG&E Subsidiaries

Other alternative redirections of the surplus funds may have been toward other PG&E Corporation unregulated affiliates. PG&E possesses many non-regulated trusts, partnerships, limited liability companies (LLCs) and separately incorporated entities. In 1997, PG&E Corporation included about 260 affiliates. Over the next few years, PG&E acquired and divested many more entities. In 2010, PG&E Corporation created four new limited liability companies and acquired a majority ownership in two different solar companies. As of December 31, 2010, PG&E Corporation legally owned about 50 subsidiaries. PG&E Company owned about 30 trusts, partnerships, and LLCs.

In December 2007, the PG&E Company board authorized specified delegated officers to approve various short-term debt financing mechanisms. One mechanism included "Accounts Receivable Financing" whereby a delegated officer can authorize PG&E Company to contribute to the capital of a wholly owned subsidiary as a LLC, sell up to all of its receivables to the LLC, and finance a portion of the LLC's purchase of the receivables.[309] Additional short-term debt mechanisms included: commercial paper and extendible commercial notes, term loan facility, synthetic letter of credit facility, and inter-company borrowing, which authorizes an officer to have PG&E Company lend funds to a subsidiary, provided such loans are interest-bearing and evidenced by a promissory note.[310] While the Commission encourages PG&E to obtain short-term financing at the best rates and terms available, these financing options come into question when PG&E Company is the lender rather than the borrower.

C. PG&E Company Management – Non-fiscal Priorities

In addition to fiscal choices, the actions of top management also have a major impact on the organization's culture. "Through what they say and how they behave, senior executives establish norms that filter down through the organization…."[311] The

---

[309] PG&E Company Board Meeting, December 19, 2007, page 451.

[310] *Id.*, pages 452-454.

[311] Robbins, Steven P. *Organizational Behavior*. Pearson Education, Inc. Upper Saddle River, NJ, 2003,

presentations to investors describe management's vision of the utility to be "the leading utility in the United States."[312] The report of the IRP states that inspirational goals must also be grounded in reality. Thus, to set a vision of being "the best" and have that vision be credible, management must make sure it possesses a realistic view of what "the best" would entail for a company whose core mission is to provide safe and reliable natural gas services.[313]

The board members' items of importance include the company's image and the company's political influence. Leadership's reactions to critical incidences and whether they are forthcoming with full and complete information can also be an indication of a company's culture.

1. The Company's Image

The report of the IRP states that, "there appears to be an elevated concern about the company's image [that] may get in the way of concentrating resources on the most important things."[314] One of PG&E's top priorities for 2005 was to enhance the reputation through a world-class communications program.[315] It is unknown whether this "top priority" was driven by the Transformation campaign, or whether it goes farther than the measurement criteria used by the Transformation efforts.

Until 2008, PG&E Company relied on a J.D. Power and Associates Customer Satisfaction Survey to determine customer satisfaction and perception. In a presentation to investors and in board meetings, management presented and discussed the survey results.

J.D. Power and Associates disclosed that it used key performance factors to determine customer satisfaction. These factors included: company image; billing and

---

page 532.

[312] PG&E Corporation: Preparing for the Future. April 4, 2007. 6; PG&E Corporation Investor Conference. May 22, 2008. 8; and; PG&E Corporation Investor Conference. February 26, 2009, page 8.

[313] IRP Report, Executive Summary, page 16.

[314] *Id.*, page 17.

[315] PG&E Company Board Meeting, February 16, 2005, page 85.

payment; corporate citizenship; communications; price and value; customer service; and, field service. Some of the notable activities that would increase a company's score included: on-line bill pay, innovative payment options, information on a pending rate increase prior to the increase, information on appliance rebates and energy-conservation programs, donations and sponsorships, and frequent contact. "Customers who received information from their gas utility companies about energy conservation tips or environmental issues were significantly more satisfied than the average customer."[316] Items such as the time it takes for a utility representative to respond to a gas leak or other public safety issues were absent.

The boards of both the Company and Corporation reviewed the approach and, in addition to other items, discussed the extent to which charitable contributions and employee volunteer involvement support the Utility's communications efforts.[317] In 2005 and 2006, PG&E Company made contributions of $30 million and $15 million respectively to the PG&E Corporation Foundation for civic grants and contributions. The board discussed, "the extent to which the use of the Foundation to make charitable grants benefits PG&E Corporation's shareholders" due to the nexus between the amount and number of grants and the J.D. Power and Associates ratings.

At the 2008 Investors Conference, PG&E presented its own measurement criteria to exhibit customer satisfaction. PG&E explained that it had increased the success rate for resolving customer issues on the first visit, sped up issue resolution by 50%, and improved the website.[318] In response to local entities' efforts to municipalize electric service, the PG&E board made a more conscious effort to increase customer outreach. Although most companies in all industries employ a team of marketing specialists as does

[316] CPUC_216-02.

[317] PG&E Corporation board meeting minutes, February 16, 2005, page 1106.

[318] 2008 Investor's Conference, May 22, 2008, page 32.

PG&E, in late 2006, the PG&E Company board hired a Community Relations Manager specifically to improve the company's image.[319]

2. The Company's Political Influence

PG&E's cultural history is replete with assertive measures and actions to eliminate competition and grow its monopoly. As early as 1905, PG&E started buying up smaller service providers. Over the following few decades through the 1930s, PG&E bought up nine other gas companies and firmly established itself as Northern California's primary gas and electricity provider.

PG&E engaged in efforts to grow and retain its virtual monopoly in Northern California for gas and electric service:

- In 1923 PG&E refused to sell its electricity distribution assets to the Sacramento Municipal Utility District (SMUD) after voters approved to municipalize, and ensued court battles for over 23 years until finally in 1946 the California Supreme Court refused PG&E's final petition and forced PG&E to sell;
- In 1927 PG&E spent over $200,000 ($2.6 million in current dollars)[320] to successfully defeat bond issues on the ballot to municipalize San Francisco power, including the unprecedented sum of $21,154 ($275,271 in current dollars) to defeat a three-year plan worked out between Mayor Angelo Rossi and the Interior Department in 1930;[321]
- In 1985 PG&E engaged in another unsuccessful court battle with residents of Folsom who voted to have SMUD serve the region; and,
- In 2002, PG&E spent $2.1 million to defeat San Francisco's Proposition D, which would have allowed the San Francisco Public Utilities Commission (SFPUC) to provide municipal power to San Francisco's residents and businesses (currently the SFPUC only provides power to San Francisco's municipal accounts).[322]

---

[319] PG&E Company Board Meeting, October 18, 2006, page 299.

[320] Bureau of Labor Statistics, "CPI Inflation Calculator," www.bls.gov,

[321] PG&E claimed that municipalizing power would amount to an unfair, forced tax on the citizens of San Francisco and that a city-run utility would lead to disaster and higher prices. (Source: http://www.foundsf.org/index.php?title=The_Hetch_Hetchy_Story,_Part_II:_PG%26E_and_the_Raker_Act)

[322] SFGate. PG&E spends big to defeat Prop. D / $2.1 million to dump public power measure. October 29,

- In 2006, PG&E spent over $9.4 million to defeat a proposition that would have allowed SMUD to serve cities in Yolo County who had approached SMUD to consider annexation;[323] [324]
- In 2008, PG&E spent about $10 million to defeat San Francisco's Proposition H, which would have required the SFPUC to evaluate municipalizing the electric system or establishing a Community Choice Aggregation (CCA);
- In 2010, PG&E spent over $46 million on a campaign that would have put an end to any opportunity for public power to even consider serving PG&E customers by requiring super-majority voter approval before local governments could use "public funds"[325] to start up electricity service, expand electricity service, or form a CCA; and,[326]
- In 2010, PG&E solicited utility customers to "opt out" of the CCA program established by the Marin Energy Authority and retain PG&E electricity service. According to a Commission report, "As the first CCA [Marin Clean Energy] took steps to become operational, it became clear that … over the course of the past several years, PG&E, as an institution, took the position of viewing the CCAs as competitors, rather than partners with customers in common."[327] The Commission demanded that PG&E immediately cease.

Board meeting minutes reveal that starting in 2006, PG&E leadership was increasingly concerned about competition. At almost every meeting from 2006 through

---

2002. http://articles.sfgate.com/2002-10-29/news/17565663_1_pg-e-san-franciscans-pacific-gas.

[323] Greenwald, David *PG&E Spends $9 Million on anti-SMUD Campaign* (October 11, 2006) The People's Vanguard of Davis http://davisvanguard.org/index.php?option=com_content&view=article&id=49:pge-spends-9-million-on-anti-smud-campaign&catid=50:elections&Itemid=83.

[324] City of Davis, "Did SMUD initiate a 'hostile takeover' of PG&E in Yolo County? No. The annexation by SMUD was requested by the elected officials representing the citizens of Woodland, Davis, West Sacramento and Yolo County. SMUD did not initiate the annexation." http://cityofdavis.org/topic/smud.cfm

[325] "Public funds" were defined broadly in the measure to include tax revenues, various forms of debt, and ratepayer funds.

[326] State law allows a city or a county, or a combination of the two, to form a CCA to provide electricity within their jurisdiction through a contract with an electricity provider other than the incumbent utility that would otherwise serve that local area.

[327] Commission: Issues and Progress on the Implementation of Community Choice Aggregation, July 31, 2011, page 10.

2010, the board was briefed on the above political efforts and campaigns. After the success of the 2006 campaign to thwart municipal expansion, the CEO presented the Vice President of Government Relations with a certificate of commendation from the Board of Directors for her efforts and commitment in leading a company-wide team to successfully oppose the municipalization of parts of Yolo County.[328] After a cursory review of the five years of board meeting minutes, it did not appear as if any other certificates of commendation were awarded by the board.

D. An Ethical Organizational Culture

The content and strength of a culture influences an organization's ethical climate and the ethical behavior of its members.[329] Management provides a role model. Employees will look to top-management behavior as a benchmark for defining appropriate behavior. When senior management is seen as taking the ethical high-road, it provides a positive message for all employees.[330] Management's ethical climate and behavior can be exemplified in the manner in which it reacts to critical incidences, how it views its employees' responsibility of ensuring public safety, how it communicates changes to its employees, what it chooses to disclose to its regulator, and how it views itself and its primary responsibilities.

1. Reactions to Critical Incidents

When an organization faces a crisis, the handling of that crisis by managers and employees reveals a great deal about the culture. The manner in which the crisis is dealt with can either reinforce the existing culture or bring out new values and norms that change the culture in some way.[331] Two particular safety incidents are indicative of PG&E's reaction, or lack thereof, when faced with potentially systemic safety issues.

---

[328] PG&E Company Board Meeting, December 20, 2006, page 320.

[329] Victor, B and J.B. Cullen. The Organizational Bases of Ethical Work Climates. Administrative Science Quarterly. March 1988. 101-125, as quoted by Robbins, Stephen P. Organizational Behavior. Pearson Education, Inc. Upper Saddle River, New Jersey, page 538.

[330] Robbins, Stephen P., page 538.

[331] Hellriegel, page 552.

On October 7, 2006, a PG&E gas crew experienced a material problem when it was repairing a gas leak caused by a third-party excavator at 8101 Cosumnes River Boulevard in Elk Grove. The PG&E crew used a pipe and coupling in the repair; however, the repair did not hold the pressure and started to leak. PG&E did not replace the other segments of pipe that were out of tolerance. PG&E left the improper pipe in the ground and completed the repairs using the same pipe but different couplings. PG&E did not file a claim with US Poly regarding the thin-walled pipe, or further investigate and minimize the risk of similar failures in the future.[332]

On December 24, 2008, a natural gas explosion killed one person, injured five people, and destroyed a home in Rancho Cordova. In a stipulation reached with CPSD, PG&E Company admitted to violations of six code parts of Title 49, Code of Federal Regulations and one Public Utilities Code Section. CPSD staff also alleged the following violations:

- Installed a segment of pipe that was not approved nor permitted for gas usage;
- Failed to take steps to locate and eliminate hazards from other non-conforming pipe that PG&E had already installed, after discovering that it had installed an out-of-tolerance pipe in Elk Grove in 2006;
- Failed to take actions to safeguard life and property when an outside hazardous leak was suspected;
- Employed inadequate emergency response plans and failing to coordinate with Fire Department, Law Enforcement, or other agencies to effectively respond to the emergency;
- Failed to train the appropriate operating personnel to assure that they were knowledgeable of the emergency procedures and verify that the training was effective; and,
- Neglected to administer drug and alcohol tests for its employees whose performance either contributed to the Rancho Cordova

[332] Commission: Appendices to Incident Investigation Report on Rancho Cordova Explosion and Fire, page 15.

> accident or whose performance cannot be completely discounted as a contributing factor for the accident.[333]

The Commission also noted that PG&E did not ensure that properly trained and equipped personnel arrived timely at the site to investigate the gas leak and to safeguard life and property. In addition, the stipulation acknowledged that the dilatory response of PG&E personnel contributed to the cause of the explosion and loss of life. Commission Decision 11-12-021 approved and adopted the stipulation between PG&E and CPSD, and increased the original stipulated penalty from $26 million to a penalty of $38 million against PG&E.

In PG&E's 2008 Annual Report under a section titled, "Operating with Excellence," the introductory letter in the 2008 Annual Report does not mention "public" safety. Instead, it states:

> Nowhere has this [accelerating progress] been more critical than on safety. In 2008, we significantly improved benchmarks for lost workdays, OSHA recordables, and motor vehicle incidents…. Sadly, any glow associated with these results was dimmed by the loss of two employees and a contractor on the job. In the wake of these and other tragic accidents, we are now implementing safety policies and practices that we believe are the most exacting ever at PG&E. … our sights are set on a goal of zero injuries. This is, above all, the right thing for our people. But it is also right for the business — excellent safety results are a leading indicator of overall operational excellence.[334]

The introductory letter of the 2008 Annual Report did not mention the Rancho Cordova explosion, the loss of a customer's life, the potential liability resulting from the explosion, or the identification of funds for future improvements to PG&E practices and procedures to ensure effective identification, repair, or replacement of similar problem pipe.

---

[333] Commission, Appendices to Incident Investigation Report on Rancho Cordova Explosion and Fire, page 2. PG&E did not admit to all of these violations in the stipulated agreement.

[334] 2008 Annual Report, page 3.

The following year, PG&E's 2009 Annual Report introductory letter highlighted a $3.9 billion investment in capital expenditures to, "support ongoing efforts to strengthen local electric and natural gas distribution systems;" however, all itemizations referenced electricity, not gas, investments. With regard to safety, the introductory letter only emphasized employee safety, not public safety.

The IRP also noticed a lack of regard for public safety. When reviewing the September 9, 2010 San Bruno incident, the IRP noted that although PG&E conducts various training exercises in emergency preparedness, the automation available to the field force was not sufficient to respond more quickly or to have secured the situation more rapidly than actually occurred. It took PG&E 1½ hours to turn off the gas valve, which would have been even longer had an off-duty employee not taken action on his own initiative.

Following the San Bruno incident, the commission ordered numerous actions by PG&E. PG&E's non-Commission ordered action in response to the San Bruno incident included a press release about its new Pipeline 2020 program. According to PG&E's President, the Pipeline 2020 program "represents a substantial and long-term commitment of people and resources to restore confidence and trust in PG&E's gas transmission system."[335]

PG&E's Pipeline 2020 program addressed five major areas:

1) Pipeline modernization;
2) Expansion of the use of automatic or remotely operated shut-off valves;
3) Advancement of next-generation pipeline inspection and diagnostic technologies;
4) Development and implementation of industry-leading best practices; and,

[335] "PG&E Announces Pipeline 2020 Program for Enhancing Natural Gas Pipeline Safety and Reliability, PG&E Aims to Advance Industry Best Practices," http://www.pge.com/about/newsroom/newsreleases/20101012/pge_announces_pipeline_2020_program_for_enhancing_natural_gas_pipeline_safety_and_reliability.shtml.

5) Enhancement of public safety partnerships.

PG&E only identified funds for item 3, the advancement of next-generation pipeline inspection and diagnostic technologies. The 2010 Annual Report states that the, "Utility plans to create a new non-profit entity to research and develop next-generation pipeline inspection and diagnostic tools. The Utility will provide $10 million to fund this new entity at no cost to customers."[336]

The 2010 Annual Report only identifies $10 million toward pipeline upgrades. On October 19, 2011, staff requested information on the Pipeline 2020 program, including documents that reflect progress made toward achieving the plan's objectives. PG&E responded with information about pipeline upgrades and valve placements; however, it did not indicate whether it had expended the $10 million for the new entity to research and develop next-generation pipeline inspection and diagnostic technologies.

The report of the IRP evaluation states that the Program 2020 plan is better described as an "execution" plan. "PG&E's plan addressed only two of the five areas of focus – system modernization and automated valves." The IRP states that the plan does not project any costs associated with the execution of the plan nor does it set any specific goals or key performance indicators to monitor the progress and effectiveness of the program. "…[T]here is no clear vision expressed by the senior management of PG&E as to what the PG&E transmission pipeline system of the future should look like, and therefore, no overall guidance as to what objectives and measurable goals Pipeline 2020 program is designed to deliver other than compliance."[337]

Staff requested a copy of the plan reviewed by the IRP but PG&E did not provide it. Instead, PG&E responded that its Pipeline 2020 Program has become the Pipeline Safety Enhancement Plan, filed pursuant to Commission Decision 11-06-017, which required all California natural gas transmission operators to test or replace all natural gas

[336] 2010 Annual Report, pages 31-32.

[337] IRP Report, page 84.

transmission pipelines not previously pressure tested. PG&E provided detailed spreadsheets that identified estimated expenditures to test or replace the pipelines and install automated valves. No information was provided on the other three Pipeline 2020 concepts such as the advancement of next-generation pipeline inspection and diagnostic technologies, the development and implementation of industry-leading best practices and, the enhancement of public safety partnerships. Absent the Commission directive, it appears the PG&E Pipeline 2020 proposal lacked commitment as evidenced by the fact that PG&E considers the Pipeline Safety Enhancement Plan to now be the plan of action. PG&E equating its supposed comprehensive Pipeline 2020 program with the Implementation Plan discussed in D.11-06-017 is illustrative of PG&E limiting its efforts to the minimum required for safety regulations.

The introductory letter in the 2010 Annual Report, published after the San Bruno incident expressed personal sadness for the tragedy in San Bruno. The CEO stated, "We continued to focus on improving PG&E's operational performance last year – a priority that has become even more pressing in view of the San Bruno accident." He concludes his opening letter with, "Our priorities this year will continue to focus above all on the safety and integrity of our operations."

Although the CEO affirmed that PG&E will "continue to focus" on safety and integrity of pipeline operations, our audit demonstrates that PG&E has under-spent the amount the Commission has authorized for natural gas transmission operations and maintenance in all but one of the past 14 years.[338]

The 2010 Annual Report states that the utility expended $3.9 billion for both electric and gas capital investments during 2010. Although the opening letter highlights the importance of reinforcing the gas pipeline infrastructure, the itemized analysis section of the report only disclosed that it will spend $10 million for the Pipeline 2020 program.[339]

---

[338] Overland Consulting, page 3-3.

[339] 2010 Annual Report, p. 32.

Consistent with PG&E's unyielding focus on the financial impact of incremental costs, PG&E requested establishment of a memorandum account so costs could be tracked separately "for possible future recovery through rates." PG&E further added in the 2010 Annual Report that if some of the work contemplated in the Pipeline 2020 program is required under legislation, the utility's cost recovery would be addressed separately by the Commission.

2. Public Safety and Employee Performance

In a strong culture, the organization's core values are both intensely held and widely shared.[340] It is unclear whether PG&E Company is committed to ensuring optimal employee performance and taking responsibility to determine whether the employee performed in a safe and reliable manner.

PG&E's consulting service contract states that, "PG&E is determined to protect its employees, customers, and the general public while they are on PG&E property from any harm caused by illegal drug and alcohol use by non-PG&E personnel."[341] For PG&E employees, the PG&E Employee Policy and Handbook[342] and DOT regulations require that covered employees shall provide post-offer pre-employment screening which includes drug screening. In addition, covered employees are subject to random testing and the frequency is based on a percentage set by the DOT of all covered employees each calendar year. However, in response to critical incidents, PG&E's actions are not consistent with commitment to this value.

The Commission investigation of the Rancho Cordova explosion on December 24, 2008 revealed that PG&E decided not to administer post-accident alcohol and drug tests for any of the employees who were involved in the natural gas leak incident as set forth

---

[340] Y. Wiener. Forms of Value Systems: A Focus on Organizational Effectiveness and Cultural Change and Maintenance. Academy of Management Review, October 1988, page 536, as quoted by Stephen Robbins, page 527.

[341] PG&E Consulting Services Contract. General Provisions. Section 20.0.

[342] CPUC_216_06Atch02-Conf, "PG&E's Drug-Free Workplace Program, DOT Drug and Alcohol Testing Program, Employee Policy and Handbook (Rev. 6/10).

in its Employee Policy and Handbook. In lieu of administering any alcohol or drug tests to its employees, PG&E issued a statement that the Gas Service Representative's actions prior to the accident was not a contributing factor in the accident because the gas service representative followed work procedures as outlined, and because the representative was 20 minutes removed from the site at the time the accident occurred

The Commission investigation concluded that PG&E was in violation of Public Utilities Code Section 451and Title 49 CFR Parts 199.105(b) and 199.225(a) and for not administering drug and alcohol tests for its employees whose performance either contributed to the Rancho Cordova accident or whose performance cannot be completely discounted as a contributing factor to the accident. PG&E ultimately admitted this violation.

3. Communication to Employees about Organizational Changes

A strong culture will have a great influence on the behavior of its members because the high degree of sharedness and intensity creates an internal climate of high behavioral control.[343] Behavior control is reflected in an employee's performance, which "depends to a considerable degree on knowing what he should or should not do."[344]

The report of the IRP states that PG&E has been in a state of perpetual organizational instability for more than a decade. It cites eight leadership changes and five changes to gas and electric transmission and distribution operations since 2006.[345] PG&E notes that since 2005, there were seven reorganizations involving various segments of gas transmission.[346] This perpetual state of organizational instability affected PG&E's organizational culture and resonated in employee performance. Objective factors that can affect employee performance include: attention to detail, outcome

[343] Robbins, Stephen P., page 527.

[344] *Id.*, page 545.

[345] IRP Report, page 49.

[346] CPUC_198-16.

orientation, people orientation, team orientation, aggressiveness, and stability.[347] "These favorable or unfavorable perceptions affect employee performance and satisfaction, with the impact being greater for stronger cultures"[348] or to the contrary, detrimental and destabilizing for weaker or uncertain culture.

PG&E's announcements to employees about organizational changes were vague and likely generated uncertainty among the employees. For example, on February 14, 2006, the Senior Vice President of Energy Delivery sent an email to Energy Delivery and Asset Management employees about a newly formed organization which combined two divisions, changed the name, and encompassed numerous existing functions along with three new ones. The email states that the reason is to "better integrate resources…and ensure greater focus on our customers." The notification states that this decision was made last month, and it pushes off concrete information to the future by using phrases, such as, "Over the next few weeks these teams will be developing the organizational structure for the remainder of their departments..." and, "In the coming days your leadership team members will meet with you and share more detail …" and, "The next phase…will be given our fullest attention over the coming weeks…."[349] The announcement fails to mention who leads the organizations and who will report to whom and whether the newly formed "teams" will be provided new or expanded responsibilities.

The reasons seem to be less assuring. The February 14, 2006 email provides that the reason is to "better integrate our resources, promote operational efficiency, capitalize on synergies across functional lines, and ensure greater focus on our customers."[350]

A March 16, 2006 email continues to push off decisiveness, "You will hear from your Senior Directors shortly about the specific changes impacting your teams."[351] A

---

[347] Robbins, Stephen P., page 545.

[348] *Ibid*.

[349] CPUC_198-16, February 14, 2006.

[350] *Id*., 2:41pm.

May 18, 2007 email states, "The leadership teams continue to work on the details of the organizational design…."[352] On June 1, 2007, employees received another email stating, "I have asked the GT&D [Gas Transmission and Distribution] leadership to develop a recommendation for me on how to best organize the business to make us the leading gas transmission and distribution organization in the U.S."[353]

On November 1, 2007, six high-level management changes were announced, soon followed by a November 15 notice from a Senior Vice President that, "we have been reassessing the Gas Transmission and Distribution organizational structure. We are still finalizing the plan, but...."[354]

A few more organizational changes occurred in the following months, which spread gas transmission operations over several integrated electric and gas organization units. The IRP report states that in 2009, Energy Delivery realigned the Maintenance and Construction departments to separate electric and gas service. The purpose of the realignment was to support improved line-of-sight and accountability. According to PG&E, the intent was to have visibility, from an organizational perspective, on the execution of work plans, the usage of resources, and the associated costs.[355] This assumes that the previous organization of the Maintenance & Construction element of natural gas operations may have lacked visibility or that work plans, resources, and costs may have been obfuscated. When asked whether the reorganization achieved visibility to ensure execution of work plans, the response was that, "improved accountability for the tasks completed in each of the respective organizations was achieved by focusing leadership in each complementary organization…. This structure change has also allowed for a more commodity-specific focus on compliance requirements, reliability, safety, work processes

[351] *Id*., March 15, 2006.

[352] *Id*., May 18, 2007.

[353] *Id*., June 1, 2007.

[354] *Id*., November 15, 2007. 3:00pm.

[355] CPUC_198-17.

and procedures."[356] While not quite reaching Orwellian proportions, PG&E's ability to communicate to its staff and to its regulator is mired in vague phrases and empty buzzwords.

4. Forthcoming with Complete Information

Every three years, PG&E presents to the Commission how much revenue it needs to provide safe and reliable utility service, which includes how much it will likely receive in revenue from its assets such as gas storage. The Commission adopts an expected revenue figure based on full information provided by the utility. If PG&E collects more than adopted, it can retain the money. If it receives less, PG&E is nevertheless obligated under Section 451 of the California Public Utilities Code to provide safe and reliable service. PG&E can use various ratemaking processes to return to the Commission and request additional funding.

The Commission audit revealed that actual revenues collected from customers exceeded adopted revenues by $224 million over the twelve-year study period.[357] One presumption is that PG&E significantly underestimated revenues received from non-core customers for natural gas storage. Over the 12-year study period, actual storage revenues exceeded adopted storage revenues by $335 million. Actual backbone transmission revenues were $229 million below the adopted amount. According to the PG&E, it operated under an "at risk" revenue model (with the exception of certain core revenues), which contemplates that actual revenue will differ from the revenue requirement adopted in the rate case decision. The audit reports that market storage revenues were increased by external market conditions that were favorable to PG&E's at-risk storage business.[358]

It is interesting to note that during the California energy crisis in 2001 when PG&E Company declared bankruptcy, PG&E's Gas Transmission and Storage operations earned an extra $126 million over the authorized revenue requirement for 2001, which

---

[356] *Ibid.*

[357] Overland Consulting, pages 5-3 and 5-4.

[358] *Id.*, page 5-5.

increased its return on equity to 22.9%. (The Commission adopted an 11.2% return on equity.)[359]

E. How PG&E Views Itself

The 2010 presentations to the Morgan Stanley Utilities Conference "Key Takeaways" state that PG&E has a solid strategy. "Customer focus" and "excellence in operations" are at the top of the list. When evaluating itself, PG&E itemizes its own factors of success in its "Report Card" that does not include the safe and reliable operation of the natural gas system. Instead, it uses financial metrics that do not include the safety of the public:

1. Earnings from Operations;
2. Capital expenditures;[360]
3. 15% Reduction in injuries (Employee injuries);
4. Energy Efficiency incentives;[361] and,
5. On time, On Budget Execution of a number of electricity generation and SmartMeter projects.[362]

F. Conclusion

It is understandable that PG&E Corporation's goals should be financially driven. However, PG&E Company is required to provide safe and reliable natural gas service to a captive client base. In return for safe and reliable natural gas service, the Commission provides a relatively exclusive franchise, recovery of all just and reasonable costs to serve customers, and a very low-risk and ample rate of return.

---

[359] *Id.*, page 5-2.

[360] The Overland Consulting audit shows that adopted capital expenditures for gas transmission and storage exceeded actual by $95 million over the study period. The 2009 Annual Report states, "The CPUC authorized most of the utility's revenue requirements to recover forecasted capital expenditures in multi-year GRCs and gas transmission and storage rate cases." Page 26.

[361] PGE applied for an incentive award of $32.4 million for their performance in 2009. D.11-12-036 awarded PGE $26,168,746 for their performance in 2009.

[362] PG&E Corporation, "Morgan Stanley Utilities Conference," March 11-12, 2010.

The Company must be financially healthy to fulfill its mission; however, it also must be safe and responsible. The IRP observed that, "the view articulated by the executive distracts from what should be the company's principal focus given the current situation – namely maintaining a safe, efficient, and effective gas transmission infrastructure."[363] To determine whether PG&E fulfilled its side of the bargain, the IRP questions whether safe and reliable operation of the natural gas facilities is part of PG&E's corporate culture. The possibility of changing a long-standing culture is debatable. "Anything less than a crisis is unlikely to be effective in brining about cultural change…but cultures can be changed."[364] It is unknown whether the San Bruno incident is that crisis.

[363] IRP Report, page 18.

[364] Robbins, Stephen P., page 546.

X. PG&E'S VIOLATIONS OF APPLICABLE LAWS AND REGULATIONS

As discussed throughout this report, PG&E did not maintain a safe condition on Segment 180 of Line 132 in San Bruno, California. Many factors contributed to the unsafe condition, including the installation of substandard pipe, failing to follow accepted industry standards during construction, failing to perform adequate inspections, failing to keep adequate safety records, failing to comply with the integrity management rules, failing to operate safely at the Milpitas Terminal, failing to promptly and safely respond to the incident, and management failing to foster a culture that valued safety over profits at PG&E. These factors all contributed to the explosion and fire at San Bruno on September 9, 2010, and together constitute an unreasonably unsafe condition on Segment 180 that lasted from 1956 to 2010, in violation of Public Utilities Code Section 451.

During construction of Segment 180 PG&E did not comply with the then-current industry standards for construction of its pipelines in violation of ASA B31.1.8 standards, creating an unsafe condition in violation of Section 451. Specifically, PG&E did not follow the established detailed requirements in ASA B31.1.8-1955 on yield strengths in pipe materials (Section 805.54 of B31.1.8), welding (Section 811.27), fabrication (API 5LX), testing (Section 841.411), records of testing (Section 841.417), and establishing MAOP (Section 845.22).

PG&E violated various requirements of 49 CFR Part 192, Subpart O, in its implementation of the Integrity Management process, including incomplete data gathering and integration, flawed threat identification, flawed risk assessment and using an incorrect assessment methodology. This allowed an unsafe condition to persist in violation of Section 451.

By erasing a digital video recording made during the incident at its Brentwood control room, PG&E destroyed potentially relevant information in violation of Commission Resolution L-403 which specifically ordered PG&E to preserve any potential evidence.

To date, CPSD's investigation has discovered the following specific violations of 49 CFR Parts 192 and 199 (CPSD's investigation is ongoing):

- By failing to follow its internal Work Procedures for the Milpitas Terminal work, PG&E violated Part 192.13(c), which creates a mandatory obligation for utilities to follow the procedures required to be adopted as part of the Integrity Management rules (Part 192, Subpart O).
- By failing to adequately maintain written procedures for conducting operations and maintenance activities and for emergency response, PG&E violated Parts 192.605(c) and 192.615.
- By failing to conduct adequate data gathering and integration to evaluate potential threats to pipeline safety, PG&E violated Part 192.917(b).
- By failing to adequately consider cyclic fatigue in its threat analysis, PG&E violated Part 192.917(e)(2).
- By failing to identify Segment 181 and other similar segments as having a potentially unstable manufacturing threat, PG&E violated Part 192.917(e)(3).
- By failing to assess the integrity of Segments 180 and 181 (and other similar segments) using an appropriate assessment technology, PG&E violated Part 192.921(a).
- PG&E failed to conduct prompt alcohol testing of the operators doing the Milpitas work in violation of Part 199.225.

XI. CPSD's Recommendations

1) PG&E should revise its pipeline construction and installation procedures and training to ensure that they meet and exceed all legal requirements and industry standards for identifying and correcting pipe deficiencies and strength testing.
2) PG&E should revise section 2 of RMP-06 to fully and robustly meet the data gathering requirements of 49 CFR Part 192.917(b) and ASME-B31.8S, and to do so without limiting its data-gathering to only that data which is "readily available, verifiable, or easily obtained" by PG&E.
3) PG&E should perform a complete company wide record search ensure its GIS database includes all pipeline leak history, including closed leak, information not already transferred to the GIS.
4) PG&E should revise its Integrity Management training to ensure that missing data is represented by conservative assumptions, and that those assumptions are supportable, per the requirements of ASME B31.8S.
5) PG&E should revise section 2 of RMP-06, and related training, to ensure full and robust data verification processes are enacted and implemented.
6) PG&E should revise its threat identification and assessment procedures and training, including its Baseline Assessment Plans, to fully incorporate all relevant data for both covered and non-covered segements, including but not limited to potential manufacturing and construction threats, and leak data.
7) PG&E should re-label its system MAOP nomenclature to avoid confusion with the MOP term of art as used by 49 CFR Part 192.917(e)(3).
8) PG&E should permanently cease the self-suspended practice of regularly increasing pipeline pressure above a "system MAOP" to eliminate the need to consider manufacturing and construction threats. In addition, due to PG&E's pressure spiking practice such threats should now be considered by PG&E to be unstable under 49 CFR Part 192.917(e)(3).
9) PG&E should revise its threat identification and assessment procedures and training to ensure that HCA pipeline segments that have had their MAOP increased are

prioritized for a suitable assessment method (e.g., hydro-testing), per the requirements of 49 CRF Part 192.917(e)(3)-(4).

10) PG&E should revise its threat identification and assessment procedures and training to ensure that cyclic fatigue and other loading conditions are incorporated into their segment specific threat assessments and risk ranking algorithm, and that threats that can be exacerbated by cyclic fatigue are assumed to exist per the requirements of 49 CRF Part 192.917(b).
11) PG&E should revise its risk ranking algorithm to ensure that PG&E's weighting factors in its risk ranking algorithm more accurately reflect PG&E's actual operating experience along with generally reflected industry experience.
12) PG&E should revise its threat identification and assessment procedures and training to ensure that PG&E's weighing of factors in its risk ranking algorithm and the input of data into that algorithm corrects the various systemic issues identified in the NTSB report and the CPSD/PHMSA 2011 Risk Assessment Audit.
13) PG&E should revise its threat identification and assessment procedures and training to ensure that the proper assessment method is being used to address a pipeline's actual and potential threats.
14) PG&E should make revisions to its equipment retention policy to ensure that integrity of equipment, wiring and documentation and identification of electrical components does not deteriorate to unsafe conditions such as occurred at the Milpitas Terminal, described herein. If PG&E does not have an applicable equipment retention policy then it should formulate one.
15) PG&E should revise its SCADA system to reduce the occurrence of "glitches" and anomalies in the control system that desensitizes operators to the presence of alarms and other inconsistent information.
16) PG&E should reevaluate SCADA alarm criteria with the goal of reducing unnecessary alarm messages.
17) PG&E should revise its control systems, including SCADA, to ensure that all relevant information, including redundant pressure sensors, is considered.

18) PG&E should install more pressure sensors and have them closely spaced and use the additional information to incorporate leak or rupture recognition algorithms in its SCADA system.
19) PG&E should program its PLCs to recognize that negative pressure values are erroneous and require intervention to prevent valves from fully opening.
20) PG&E should replace the three pressure controllers which malfunctioned on September 9, 2010.
21) PG&E should review its work clearance process to ensure that abnormal operating conditions that may arise during the course of work are anticipated and responses to those conditions are detailed. Additionally, PG&E should create a "method of procedures" covering the transfer and commission of electrical loads from one Uninterruptable Power Supply to another. This plan should cover possible scenarios and contingency plans to mitigate any abnormal operating conditions that may arise.
22) PG&E should revisit its Work Clearance procedures and training to ensure that future work will not be authorized unless: all forms and fields therein are comprehensively and accurately populated; and, the gas technician has prepared the work clearance him/herself or has intimate knowledge of the work clearance. Additionally, work should not commence until such time as the operator and technician have reviewed the work clearance and have confirmed that both have intimate knowledge of the items detailed in the work clearance form. Lastly, PG&E must ensure that proper records showing the specific steps taken, when taken, and by whom, are retained.
23) Training – PG&E should provide training to Gas Service Representatives to recognize the differences between fires of low-pressure natural gas, high-pressure natural gas, gasoline fuel, or jet fuel.
24) Internal coordination – PG&E should revise its procedures to outline each individual Dispatch and Control Room employee's roles, responsibility, and lines of communication required to be made in the event of an emergency either during or

outside normal working hours. This should include assigning specific geographical monitoring responsibilities for Control Room employees.

25) External coordination – CPSD agrees with NTSB recommendation P-11-2, which requests that PHMSA issue guidance to operators of natural gas transmission and distribution pipelines and hazardous liquid pipelines regarding the importance of control room operators immediately and directly notifying the 911 emergency call center(s) for the communities and jurisdiction in which those pipelines are located when a possible rupture of any pipeline is indicated. CPSD further recommends that prior to such PHMSA guidance PG&E should revise their own procedures to allow for the immediate and direct notification of 911 emergency call centers when a possible pipeline rupture is indicated.

26) Decision making authority – PG&E should revise its emergency procedures to clarify emergency response responsibilities, especially in regards to authorizing valve shut offs. PG&E policies should not just delegate authority to act but also detail obligations to act.

27) RCV/ASV – PG&E should perform a study to provide Gas Control with a means of determining and isolating the location of a rupture remotely by installing RCVs, ASVs, and appropriately spaced pressure and flow transmitters on critical transmission line infrastructure and implement the results.

28) Response time – PG&E should review required response times in other utility service territories nationwide and devise appropriate response time requirements to ensure that its Emergency Plan results in a "prompt and effective" response to emergencies. PG&E shall report its analysis and conclusions to the Commission for review.

29) Emergency Plan Revision – Currently a maintenance supervisor annually reviews SCADA alarm responses and makes revisions as necessary. This process needs to be formalized to ensure a robust feedback loop such that new information is fully analyzed and necessary changes to PG&E's Emergency Plan and/or other

procedures are implemented with a subsequent review of made changes to ensure they are adequate.

30) Public Awareness – CPSD agrees with NTSB recommendation P-11-1, which requests PHMSA issue guidance to operators of natural gas transmission and distribution pipelines and hazardous liquid pipelines regarding the importance of sharing system-specific information, including pipe diameter, operating pressure, product transported, and potential impact radius, about their pipeline systems with the emergency response agencies of the communities and jurisdiction in which those pipelines are located. CPSD further recommends that prior to such PHMSA action PG&E undertake a review of its public awareness and outreach programs to ensure that system-specific information is appropriately disseminated.

31) PG&E should use the $39,257,000 in previously authorized rate recovery for pipeline transmission operations and maintenance that it failed to spend since 1997 to fund future pipeline transmission operations and maintenance before it seeks additional ratepayer funds going forward. (source: Overland Report, page 3-3, Table 3-2) CPSD further recommends that PG&E focuses on modifying its pipelines such that its systems ability to accommodate ILI tools becomes consistent with industry averages.

32) Regarding PG&E's gas transmission and storage operations, PG&E under spent $95,372,000 for capital expenditures since 1997; PG&E should use these previously authorized ratepayer funds to fund future gas transmission and storage capital expenditures before it seeks additional ratepayer funds going forward. (Source: Overland Report, page 4-2, Table 4-1.)

33) PG&E should use the $429,841,000 in revenue collected since 1999 that is above and beyond what it required to earn its authorized return on equity, to fund future gas transmission and storage operations before it seeks additional ratepayer funds going forward. (Source Overland Report, page 5-2, Table 5-2.)

34) PG&E's "Transformation" strategy and subsequent programs should expressly ensure that safety is a higher priority than shareholder returns and be designed to

implement that priority, which may include reinvesting operational savings into infrastructure improvements.

35) PG&E should target retained earnings towards safety improvements before providing dividends, especially if the ROE exceeds the level set in a GRC decision.
36) PG&E's incentive plan, and other employee awards programs, should include selection criteria for improved safety performance and training and/or experience in the reliability and safety aspects of gas transmission and distribution. PG&E should ensure that upper management attends gas safety training.
37) PG&E should not hold joint Company and Corporation Board of Director meetings as the two entities should have different priorities.
38) PG&E should examine whether the time and money it spends on public relations and political campaigns distracts it from its core mission of providing safe and reliable gas service.
39) PG&E should revisit its Pipeline 2020 program, and subsequent variations thereof, to ensure that its implementation is fully flushed out with specific goals, performance criteria, and identified funding sources.
40) PG&E should examine internal communication processes to ensure that all employees are knowledgeable on what is expected of them and their teams.
41) CPSD agrees with the following NTSB recommendations to PG&E (NTSB Report, pages 130-131):
    a) Revise your work clearance procedures to include requirements for identifying the likelihood and consequence of failure associated with the planned work and for developing contingency plans. (P-11-24)
    b) Establish a comprehensive emergency response procedure for responding to large-scale emergencies on transmission lines; the procedure should (1) identify a single person to assume command and designate specific duties for supervisory NTSB Pipeline Accident Report 131control and data acquisition staff and all other potentially involved company employees; (2) include the development and use of trouble-shooting protocols and

checklists; and (3) include a requirement for periodic tests and/or drills to demonstrate the procedure can be effectively implemented. (P-11-25)

c) Equip your supervisory control and data acquisition system with tools to assist in recognizing and pinpointing the location of leaks, including line breaks; such tools could include a real-time leak detection system and appropriately spaced flow and pressure transmitters along covered transmission lines. (P-11-26)

d) Expedite the installation of automatic shutoff valves and remote control valves on transmission lines in high consequence areas and in class 3 and 4 locations, and space them at intervals that consider the factors listed in Title 49 Code of Federal Regulations Part 192.935(c). (P-11-27)

e) Revise your postaccident toxicological testing program to ensure that testing is timely and complete. (P-11-28)

f) Assess every aspect of your integrity management program, paying particular attention to the areas identified in this investigation, and implement a revised program that includes, at a minimum, (1) a revised risk model to reflect the PG&E Company's actual recent experience data on leaks, failures, and incidents; (2) consideration of all defect and leak data for the life of each pipeline, including its construction, in risk analysis for similar or related segments to ensure that all applicable threats are adequately addressed; (3) a revised risk analysis methodology to ensure that assessment methods are selected for each pipeline segment that address all applicable integrity threats, with particular emphasis on design/material and construction threats; and (4) an improved self-assessment that adequately measures whether the program is effectively assessing and evaluating the integrity of each covered pipeline segment. (P-11-29)

g) Conduct threat assessments using the revised risk analysis methodology incorporated in your integrity management program, as recommended in

Safety Recommendation P-11-29, and report the results of those assessments to the Commission and the Pipeline and Hazardous Materials Safety Administration. (P-11-30)

h) Develop, and incorporate into your public awareness program, written performance measurements and guidelines for evaluating the plan and for continuous program improvement. (P-11-31)