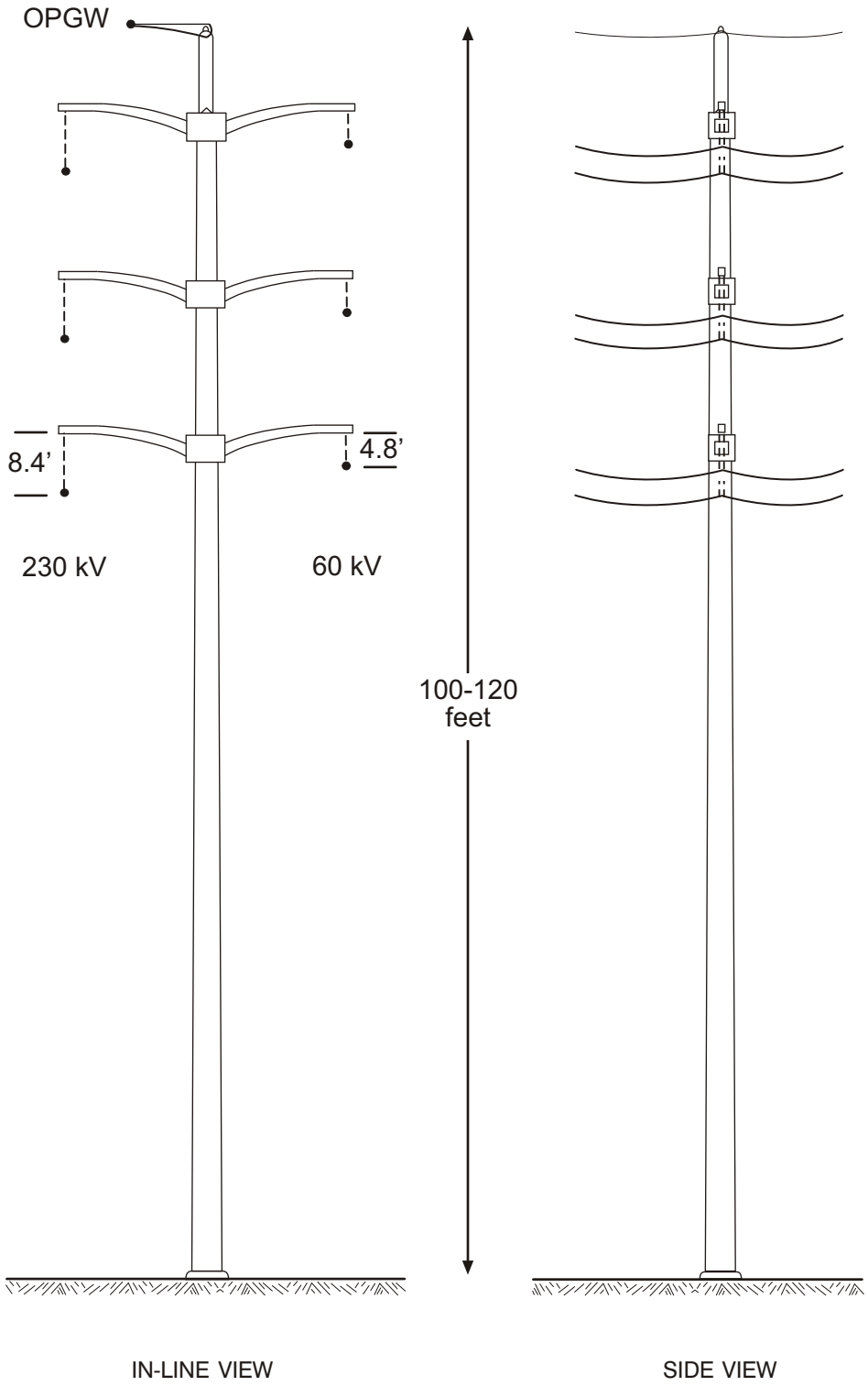

Not to Scale

Source: CH2MHILL

Jefferson-Martin 230 kV Transmission Line Project

Figure B-6

Typical Tangent Tubular Steel Pole

Aspen Environmental Group