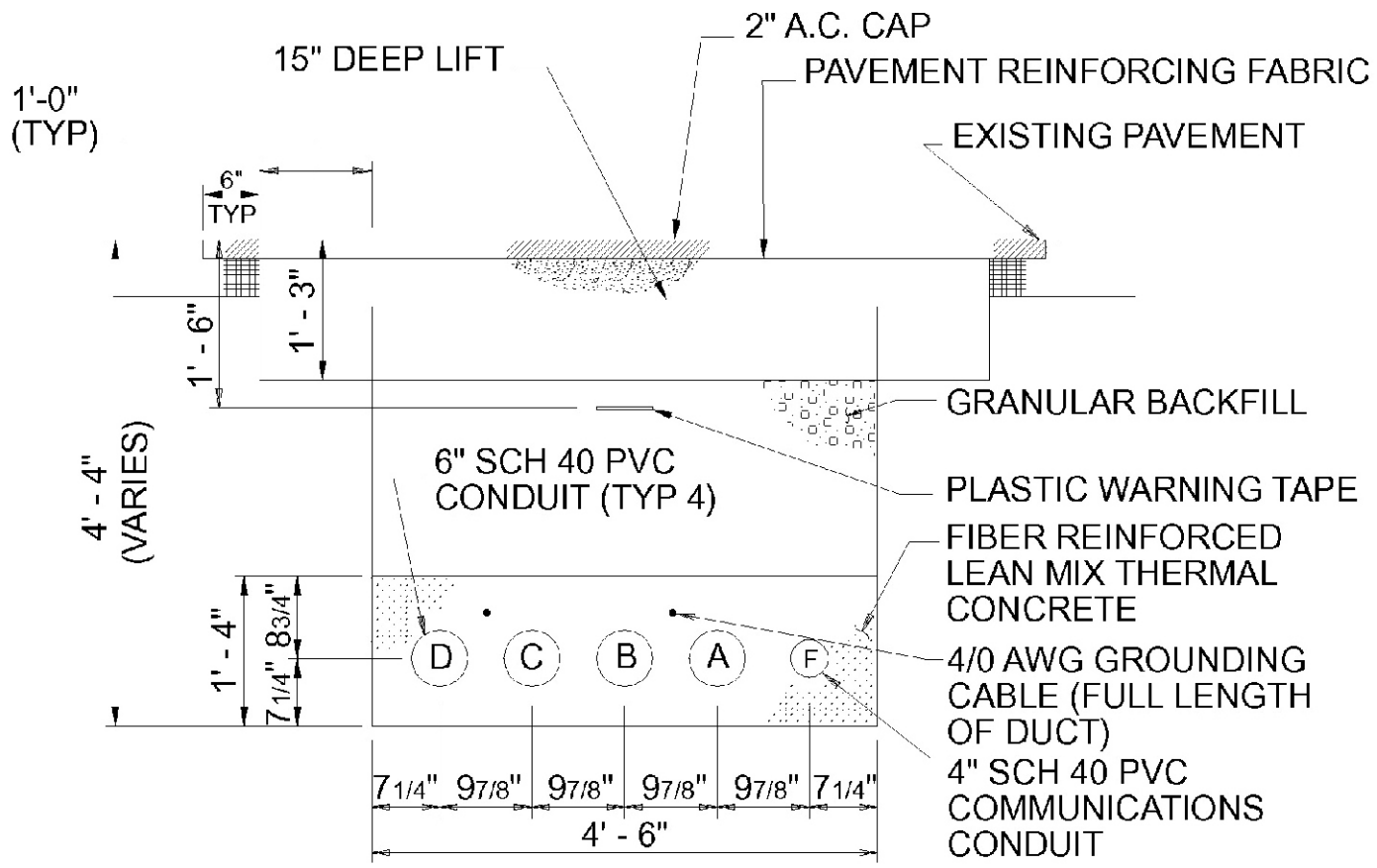

Source: CH2MHILL

Jefferson-Martin 230 kV Transmission Line Project

Figure B-10

Typical Reduced-Height Duct Bank within Paved Streets

Aspen Environmental Group