SAE V2G-AC & SAE V2G-DC Use Cases

Hank McGlynn

hank.mcglynn@aeych.com

(607) 786-5343

PEV and EVSE as an integrated DER

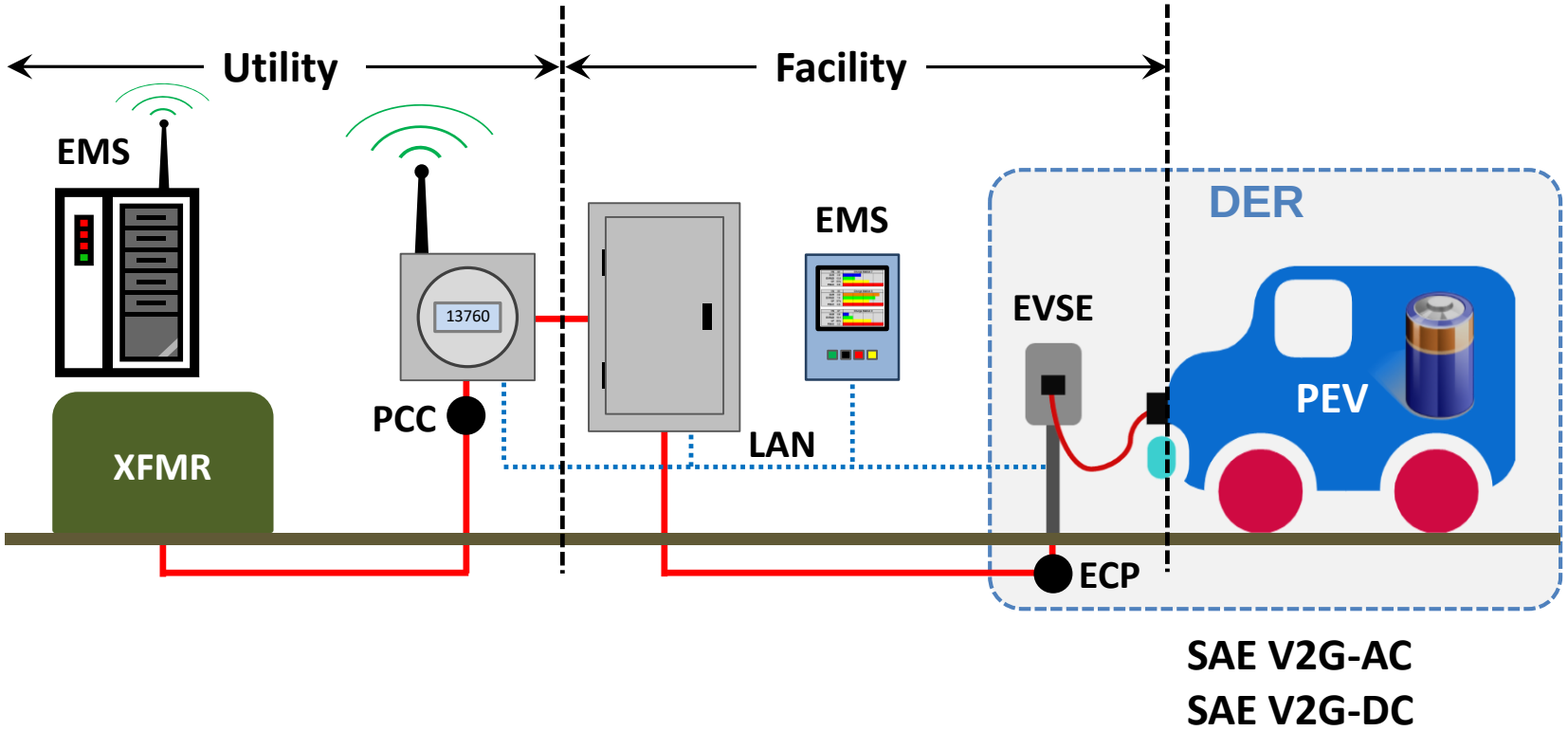

Electric Power System Domains

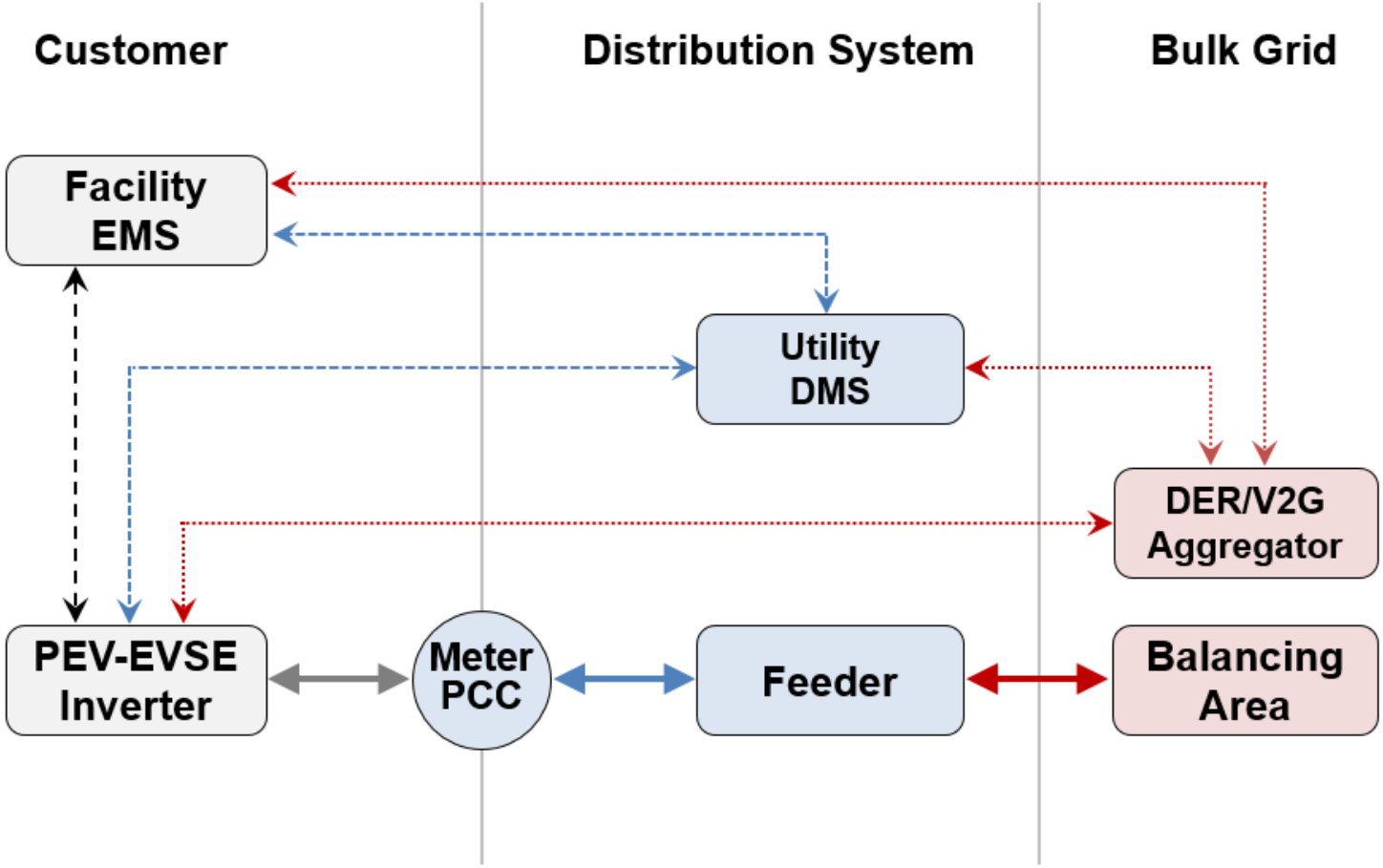

California SIWG DER Model

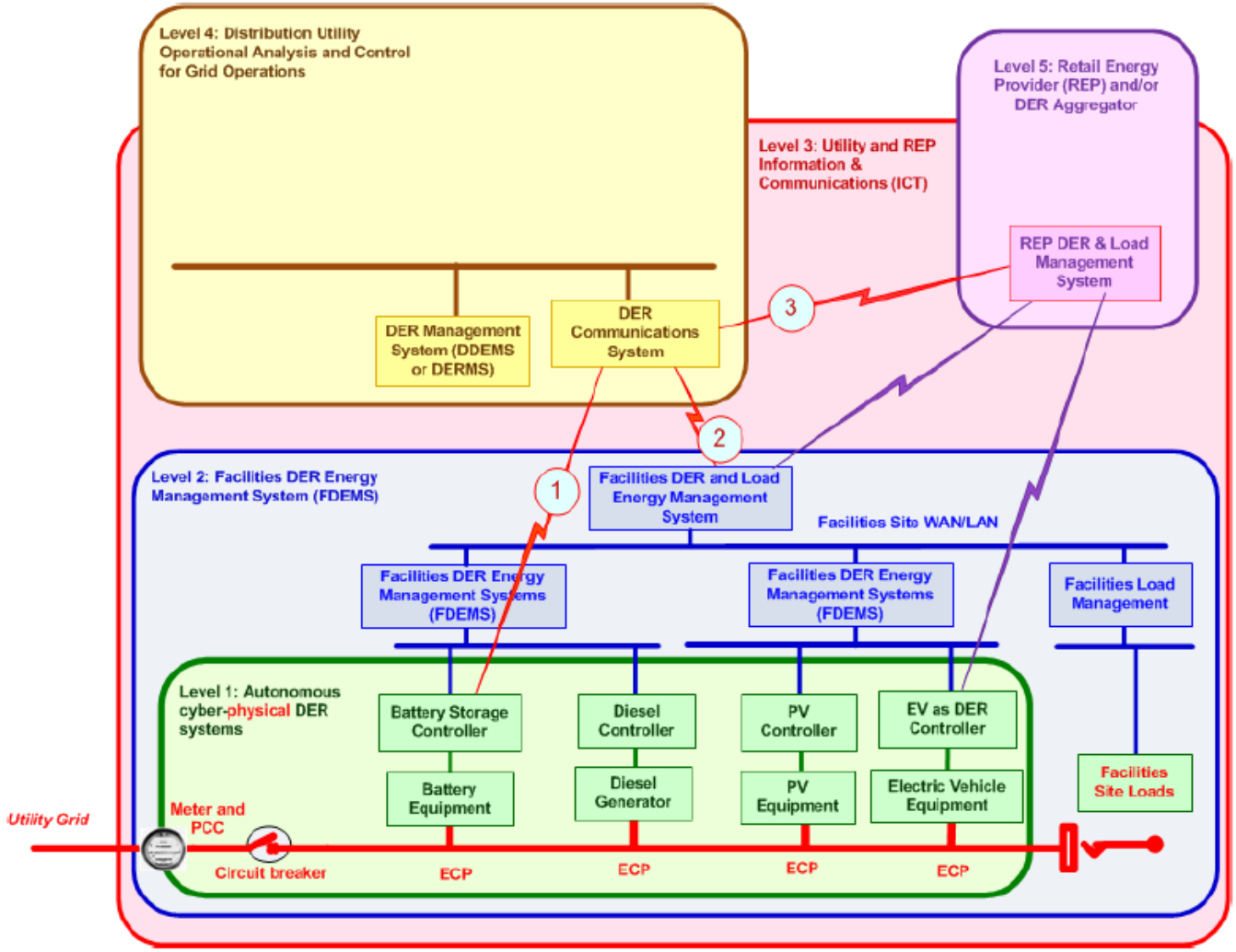

SAE Types of Reverse Power Flow (J2836/3)

Reverse Power Flow Application	Basic Type	PEV Power Transfer Port		
		DC	AC	EPP
Power plug-in loads which are not connected to a facility power system	V2L	V2L-DC		V2L-EPP
PEV is only source of backup power for islanded home (NEC 702)	V2H	V2H-DC	V2H-AC	V2H-EPP
Connected in parallel with utility grid (NEC 705) or to islanded AC microgrid with strong VF source	V2G	**V2G-DC**	**V2G-AC**	
Connected to a “weak” islanded AC microgrid – Special Case of V2G	V2M	V2M-DC	V2M-AC	
Connected to a DC microgrid which could be in islanded facility – Special Case of V2G	V2D	V2D-DC		

J2836/3 Additional Use Cases to J2836/1

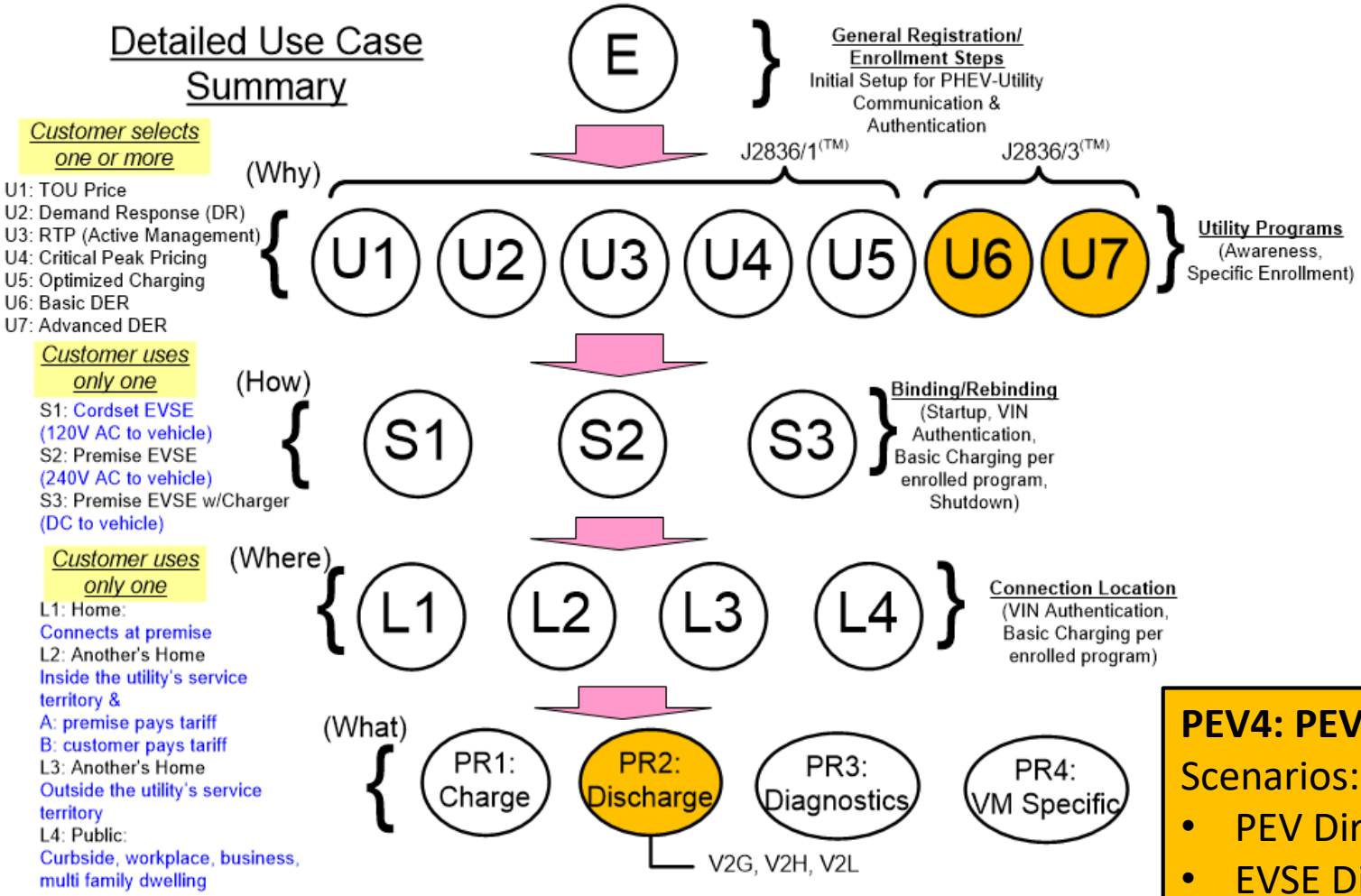

PEV4: PEV as a DER

Scenarios:

- PEV Direct (V2G-AC)
- EVSE Direct (V2G-DC)

Examples of V2G Applications

Domain	V2G (DER) Application Examples	Operational Bandwidth	SAE Utility Functions
System	Real Time Energy Market	Minutes	U6
System	AGC Frequency Regulation	Seconds	U6
Distribution	L/H V/F Ride Through (Required by Rule 21)	Cycles	U7 Ride Through
Distribution	Dynamic Volt-VAR (Required by Rule 21)	Cycles	U7 Volt-VAR
Distribution	Dynamic Frequency-Watt	Cycles	U7 Freq-Watt
Distribution	Dynamic Volt-Watt	Cycles	U7 Volt-Watt
Distribution	Manage Active Power	Minutes	U6
Customer	Manage Facility Energy Charges	Hours	U6
Customer	Limit Facility Peak Demand Charge	Minutes	U6
Customer	Power Factor Compensation	Cycles	U7 Watt-PF

Smart Inverters – EPRI and IEC TC57

IEC/TR 61850-90-7

Edition 1.0 2013-02

TECHNICAL REPORT

colour inside

Communication networks and systems for power utility automation – Part 90-7: Object models for power converters in distributed energy resources (DER) systems

Common Functions for Smart Inverters, Version 3

3002002233

Technical Update, February 2014

EPRI Project Manager

B. Seal

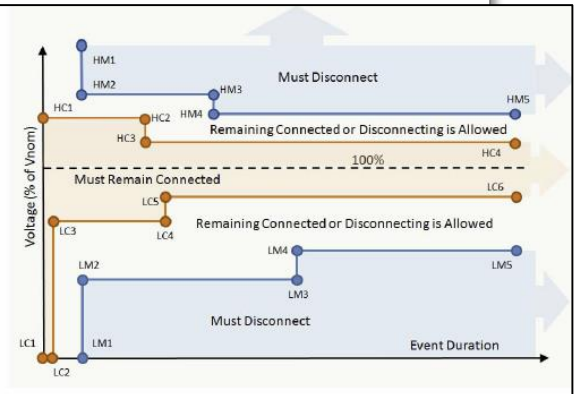

Figure 14-1
LVRT and HVRT Areas Created by Four Configured Curves

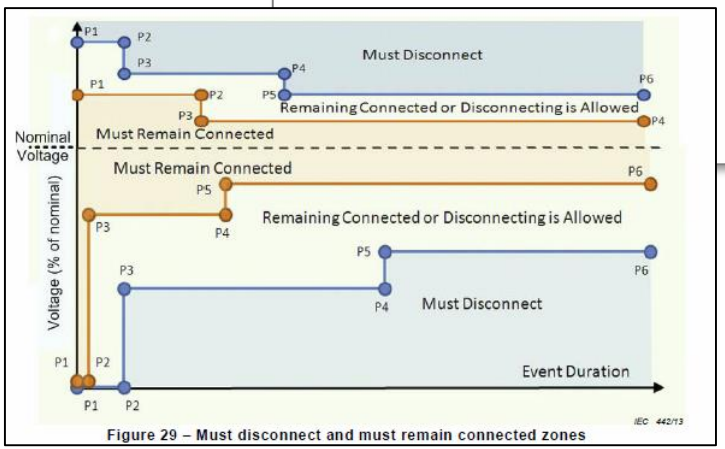

Figure 29 – Must disconnect and must remain connected zones

SAE U6 Basic DER

Common Functions for Smart Inverters, Version 3

3002002233

Technical Update, February 2014

7

BATTERY STORAGE: COORDINATED CHARGE/ DISCHARGE MANAGEMENT FUNCTION

Scope of this Function

This function identifies a set of quantities that can be read from battery storage systems to enable their management to be coordinated with the local needs of the storage users in terms of target charge level and schedule. This function enables the separately-described direct charge/discharge function to be handled more intelligently, ensuring that the storage system achieves a target state of charge by a specified time.

Prior Bodies of Work

The SAE developed the basic principles for this function for use with electric vehicles that are capable of discharging power to the grid. This work is described in SAE J2836/3™ Use Cases for Plug-in Vehicle Communication as a Distributed Energy Resource.

SAE U7 Advanced DER

EPRI/IEC Function	Type	Rule 21
Fixed Power Factor	Setpoint	
Fixed VAR	Setpoint	
Volt-VAR	Autonomous	2017-09
Volt-Watt	Autonomous	PH3-Pr1
Frequency-Watt	Autonomous	PH3-Pr1
Watt-Power Factor	Autonomous	
Low/High Voltage RT	IEEE 1547	2017-09
Low/High Frequency RT	IEEE 1547	2017-09

All functions implemented in IEEE 2030.5 (SEP2)

SAE V2G-DC (EVSE Direct)

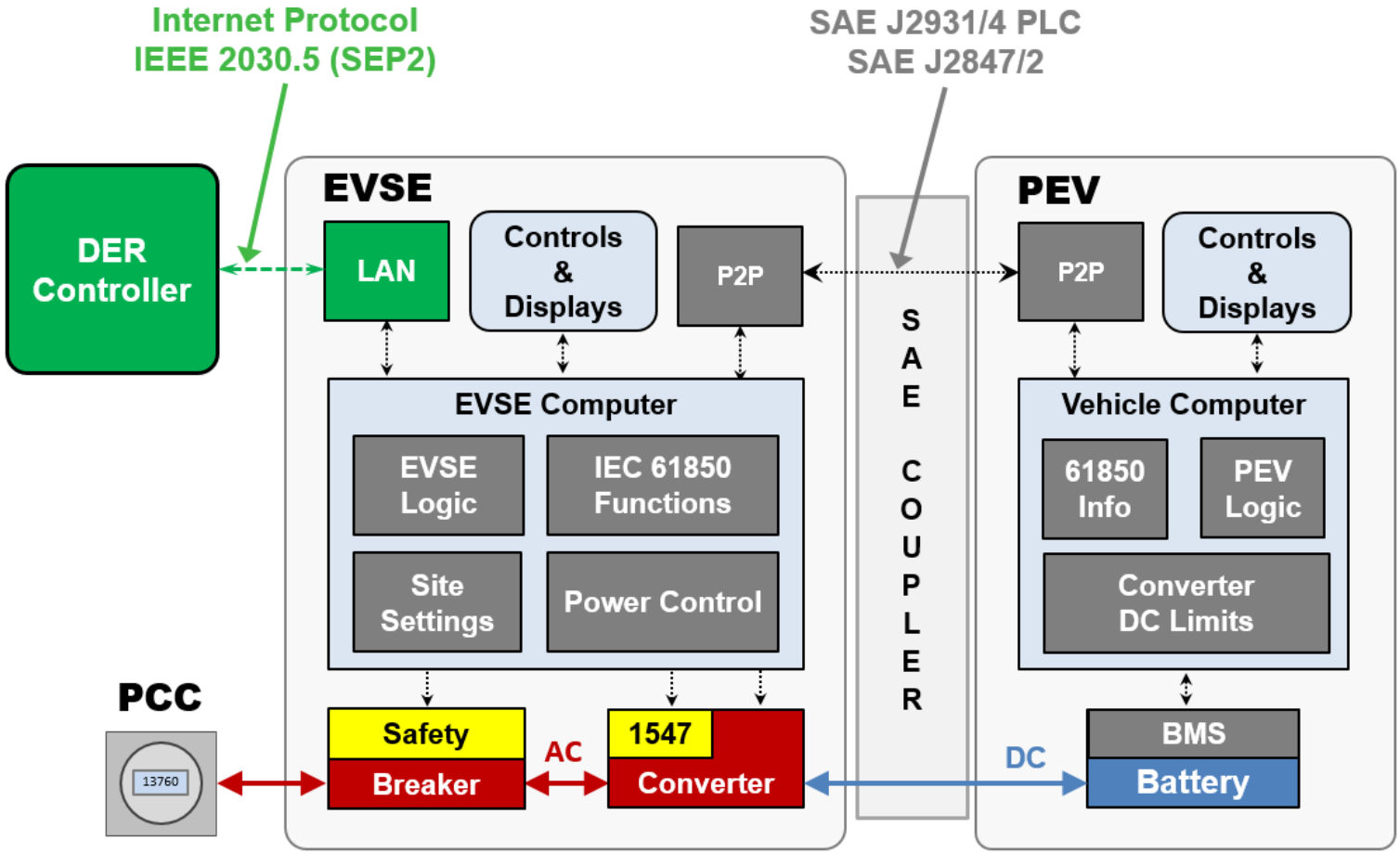

SAE V2G-AC (PEV Direct)

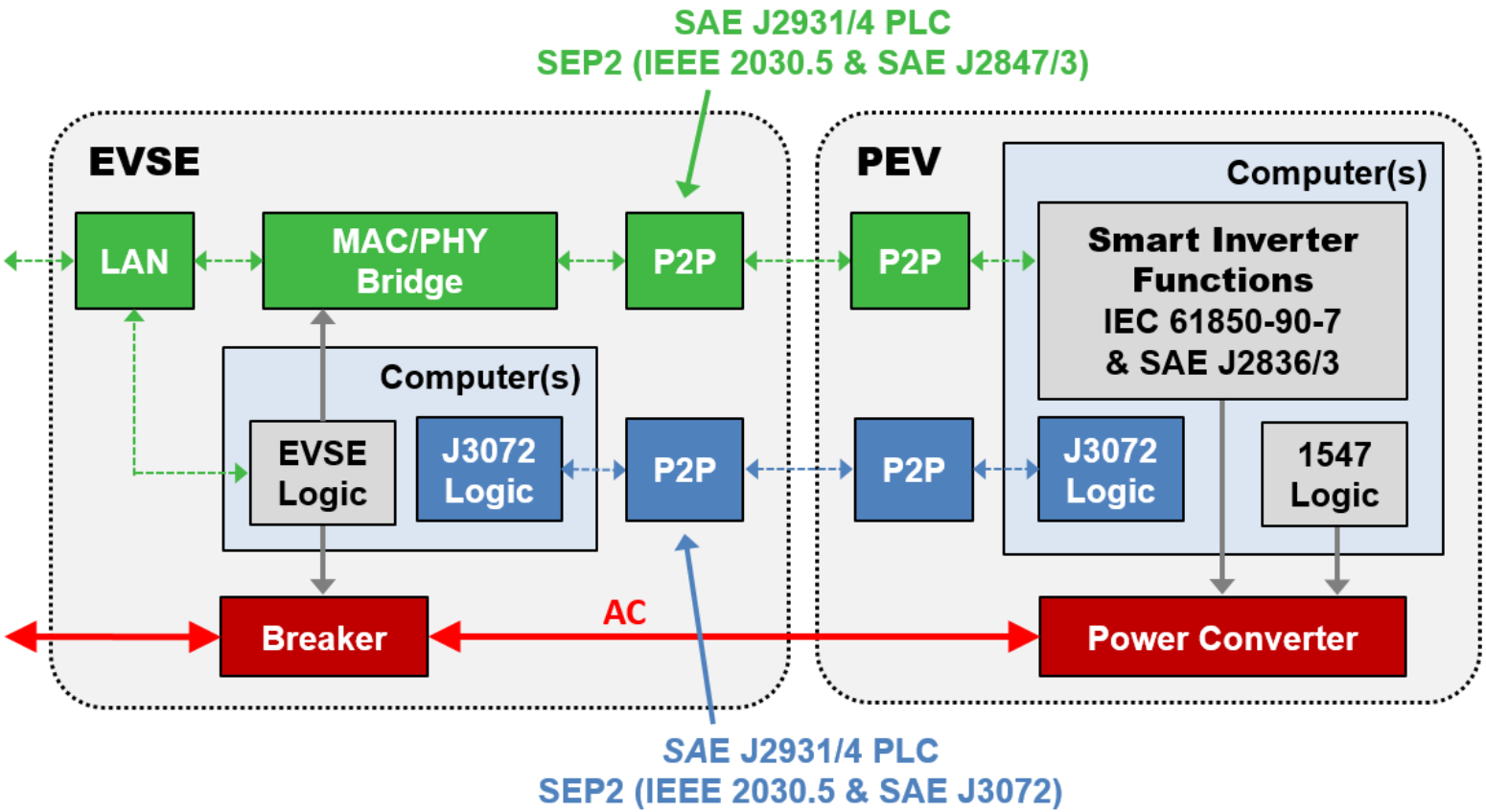

The Roaming Inverter (DER V2G-AC)

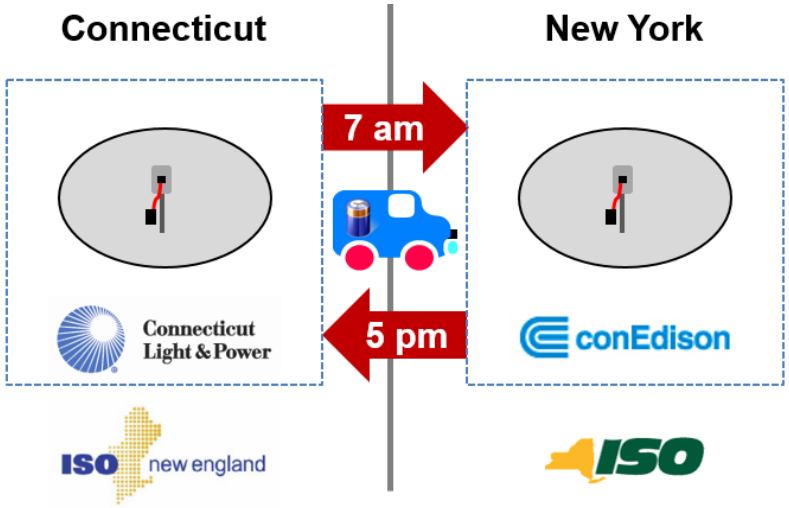

When PEV connects to EVSE

1. EVSE provides site settings to PEV
2. EVSE confirms PEV settings
3. EVSE verifies PEV J3072 certification
4. EVSE authorizes PEV to discharge

Equipment Listings & Certifications

PEV's "Inverter System Model" (ISM) certified by Vehicle Manufacturer to SAE J3072

EVSE Model listed by NRTL to UL 1741 and J3072

Installation Approval by Code Authority

EVSE installation to NEC 625.48 (2017)

PEV equipment is out of scope of NEC

Utility DER Interconnection approval

Interconnect application based on EVSE
TBD utility role for approval of PEV inverters?
Authorization to Discharge Method?
- Only by onboard J3072 software tag?
- By EVSE search of PEV inverter database?

BACKUP CHARTS

Actors

Actor Name	Actor Type (person, device, system, etc.)	Actor Description
V2G Owner	Person/Organization	DSO, Facility, DER Aggregator – V2G application owner
PEV Owner	Person	Vehicle owner/operator
EVSE Owner	Person/Organization	EVSE owner/operator
PEV	Device	Plug-in Electric Vehicle with onboard inverter
EVSE	Device	Electric Vehicle Supply Equipment (AC L2)
EMS	Device	Energy Management System in control of PEV inverter
Utility	Organization	Utility (DSO) that serves facility with EVSE
PEV OEM	Organization	PEV Manufacturer
EVSE OEM	Organization	EVSE Manufacturer
NRTL	Organization	OSHA Nationally Recognized Testing Laboratory

V2G Application Use Case

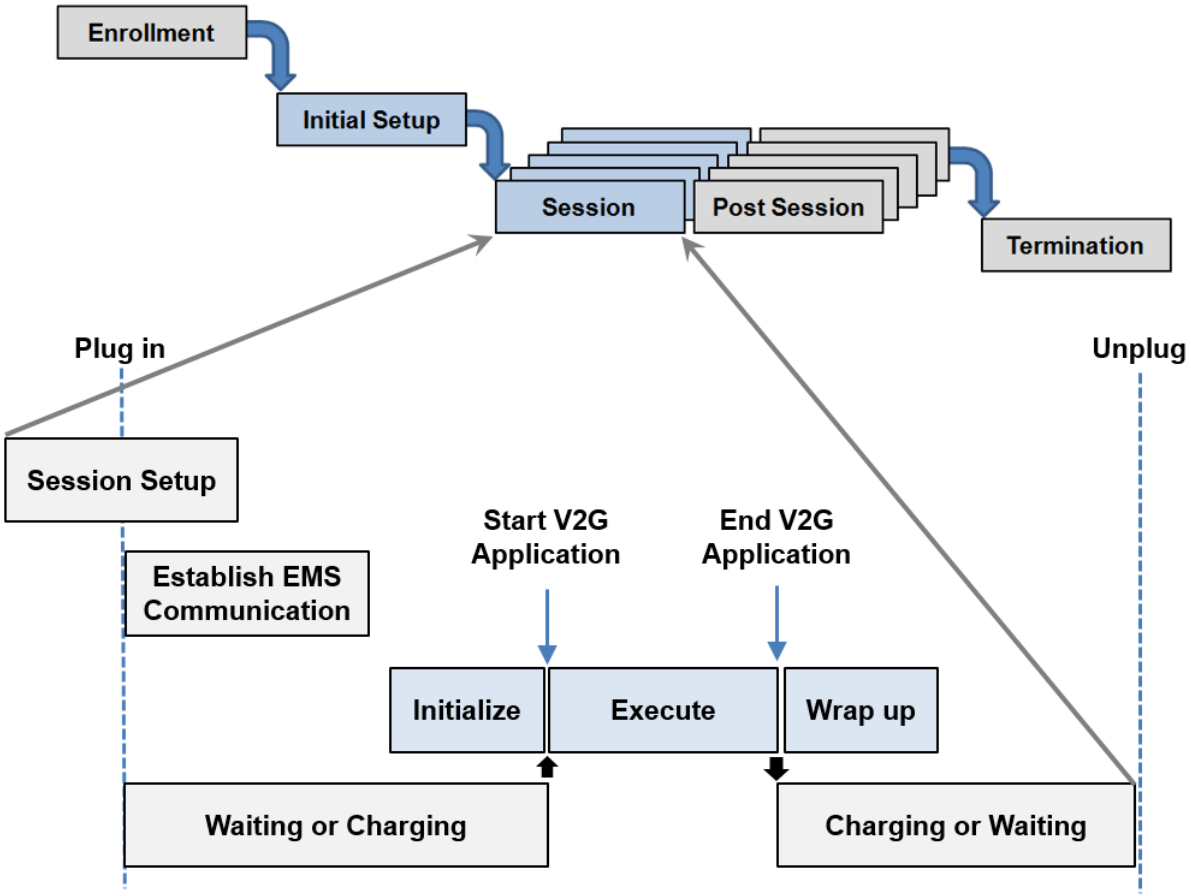
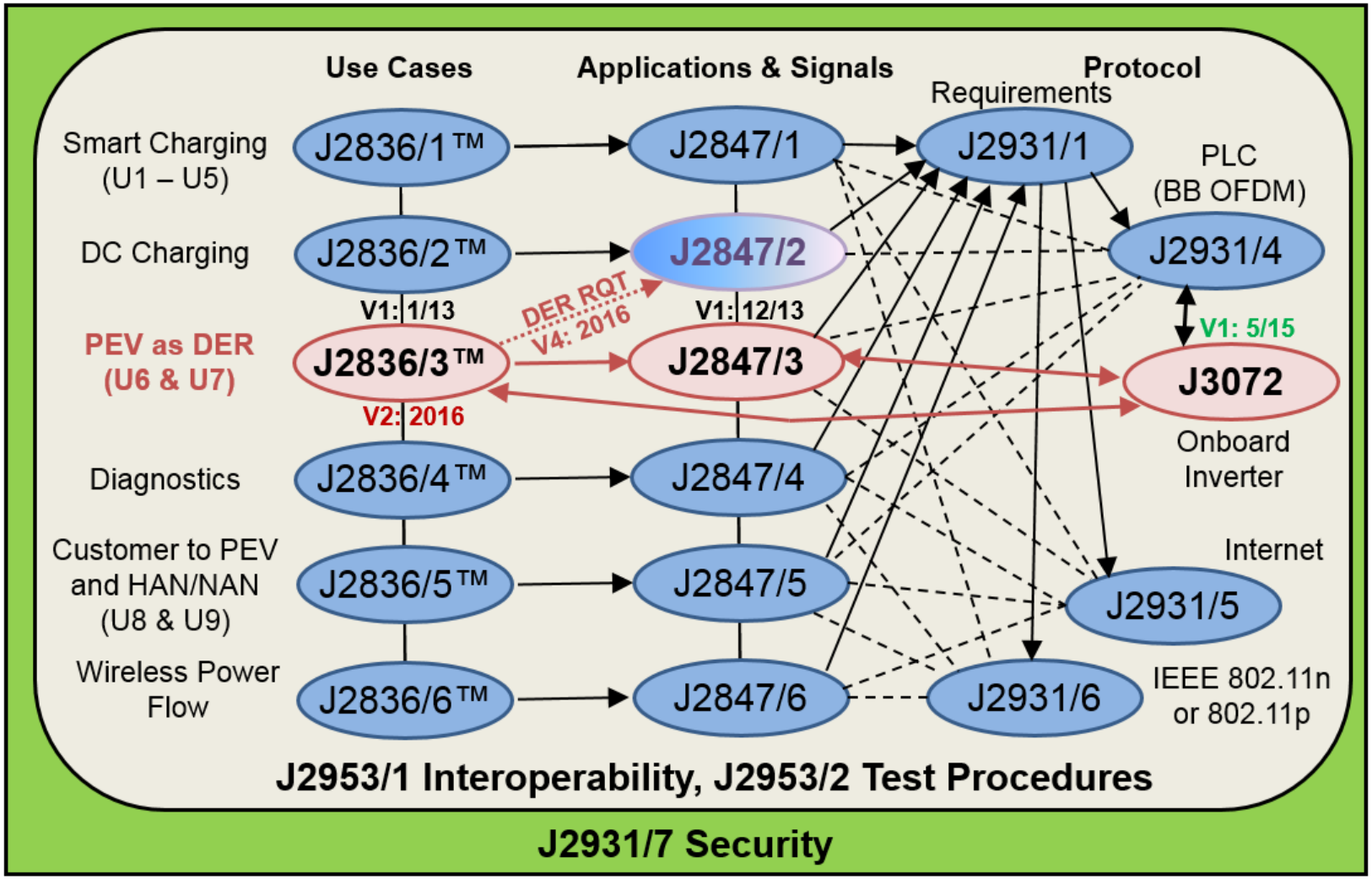
Communications & Interoperability Task Force