V2G Use Case: SAE V2G-DC (EVSE Direct)

EVSE and PEV serve as a Distributed Energy Resource (DER) using EVSE power conversion

Use Case Summary

An energy storage system (ESS) type of distributed energy resource (DER) is created by connecting a PEV to an EVSE that includes a four-quadrant power converter (inverter). Because a PEV is used, this can be termed a vehicle to grid (V2G) application and an example of vehicle grid integration (VGI). But the EVSE-PEV as an ESS DER can be integrated with other types of DER as a more general case of DER grid integration.

Use Case Detailed Narrative

The figure below shows the connection of an EVSE with a four-quadrant power converter to a PEV capable of discharging DC power. After September 2017, all new energy storage system installations in California are required by CPUC Rule 21 to provide a four-quadrant converter. The block labelled IEC 61850 Functions is the core functionality of the EVSE-PEV as a DER. Those smart inverter functions which are required by Rule 21 must be implemented, while other IEC 61850 functions may be optionally implemented by the EVSE OEM. A controlling entity (which could be a facility DER energy management system (FDEMS), a DSO DER controller, or a third party DER aggregator) engages with these functions to perform one or more DER applications for the facility, the feeder, and/or the bulk grid. The SAE V2G-DC DER could engage with a V2G aggregator to perform frequency regulation with CAISO. The V2G-DC DER could engage with a FDEMS to manage facility power at the point of common coupling (PCC). The DSO may authorize the DER to automatically compensate for voltage changes at the PCC by absorbing or producing reactive power based on a curve provided by the DSO.

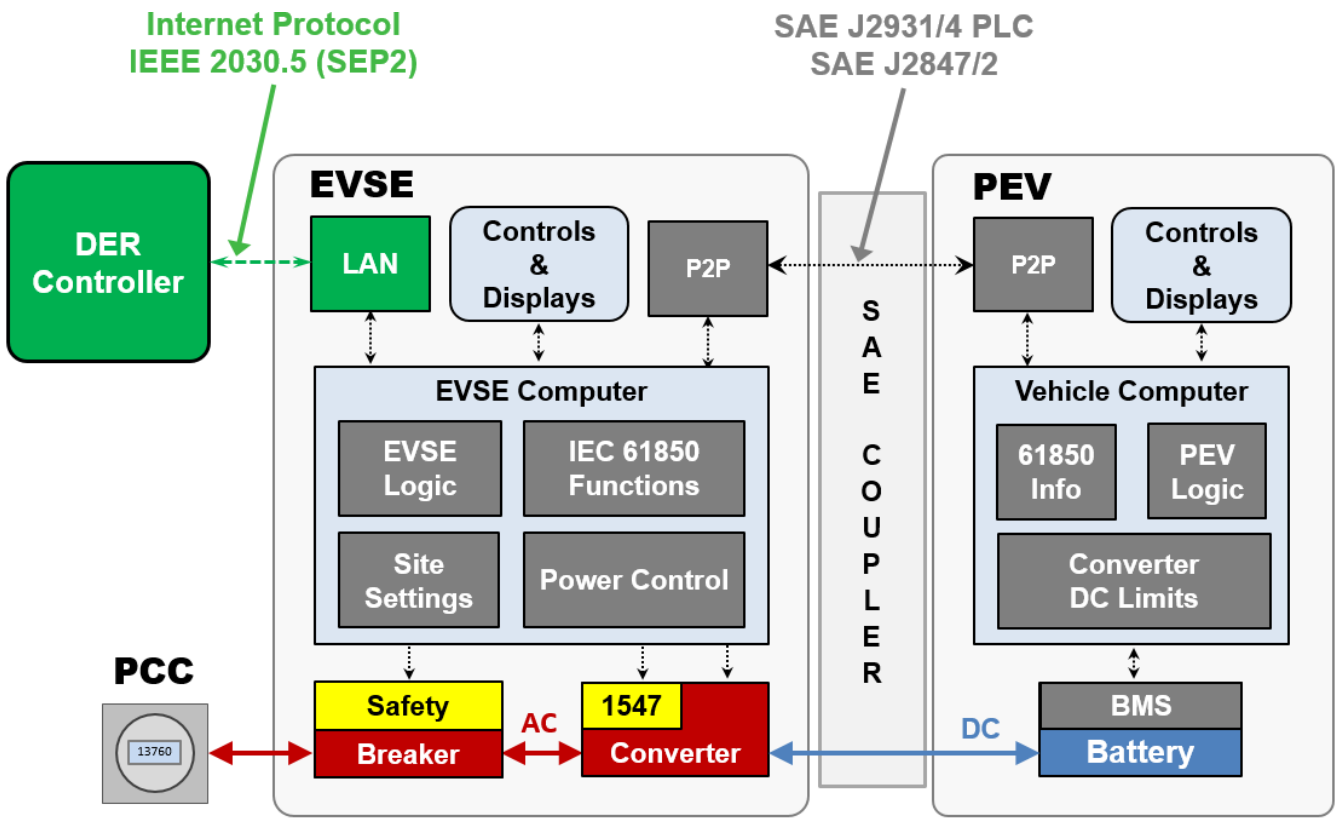

The EVSE engages with the control entity by the internet using a protocol that fully supports the IEC 61850-90-7 model. IEEE 2030.5 Smart Energy Profile 2.0 Application Protocol (SEP2) fully supports the IEC 61850-90-7 functions and has been selected by California as a DER protocol. This is designated by the green blocks and lines. SAE J2847/3 provides guidance for how SEP2 could be used with the EVSE, if the EVSE OEM uses SEP2 for communication.

The PEV battery management system (BMS) engages with the inverter to provide limits for the smart inverter in the EVSE. This is different than DC Fast Charging because it is the EVSE inverter that pushes and pulls DC current from the PEV battery as needed to perform the function, subject to BMS limits. It is expected to add DER messages and modes to the existing DC charging protocols. SAE V2G-DC uses powerline carrier communication on the J1772 control pilot which is defined by SAE J2931/4. The messages are defined by SAE J2847/2 which has been harmonized with German DIN 70121. It is expected to harmonize SAE J2847/2, DIN 70121, and a new version of ISO 15118-X which will include DC DER capability. SAE V2G-DC uses an SAE J1772 connector. It is possible that CHAdeMO would provide a DEC DER mode for those PEV and EVSE models equipped with that type of connector.

Business Rules & Assumptions

Most vehicles will include a capability for DC Fast Charging. Today there are vehicles deployed that provide CHAdeMO connections and others with SAE Combo connections. Only software changes are required to upgrade a vehicle for bidirectional DC transfer as a DER. Most of the complexity is with the EVSE that contains a very sophisticated inverter. This EVSE is like a stationary energy storage system and interconnection approval by a utility is much more conventional. The EVSE would be tested and listed to UL 1741 California Supplement as well as any applicable UL EVSE standards. The facility owner would need to justify the cost of installing this type of EVSE rather than a lower cost AC L2 charging station.

Actors

Actor Name	Actor Type (person, device, system, etc.)	Actor Description
V2G Owner	Person/Organization	DSO, Facility, DER Aggregator – V2G application owner
PEV Owner	Person	Vehicle owner/operator
EVSE Owner	Person/Organization	EVSE owner/operator
PEV	Device	Plug-in Electric Vehicle with onboard inverter
EVSE	Device	Electric Vehicle Supply Equipment (AC L2)
EMS	Device	Energy Management System in control of PEV inverter
Utility	Organization	Utility (DSO) that serves facility with EVSE
PEV OEM	Organization	PEV Manufacturer
EVSE OEM	Organization	EVSE Manufacturer
NRTL	Organization	OSHA Nationally Recognized Testing Laboratory

Electric Power System Domains

An EVSE-PEV operating as a DER is engaged in three electric power system domains simultaneously. The DER is located behind the customer meter and directly impacts the power flowing through the meter, even if there is no net production of energy at the meter (which is the point of common coupling – PCC). The net active (real) and reactive power flow at the PCC directly impacts the power flow on the distribution feeder. And the active and reactive power flow of the utility distribution circuits impact the total active and reactive power flow of the bulk grid balancing area (e.g. CAISO).

The interaction of a single DER with the customer, distribution system, and bulk domains is shown in the figure below. Aggregating hundreds of DER by a DER (or a V2G) aggregator to perform frequency regulation service for a CAISO market has an impact on power flow for many distribution feeders and each customer PCC. Coordination may be required between controlling entities for each domain. The need for active DER management by the DSO is emerging as a major new concern in the electric power industry. A single DER may be able to simultaneously serve several domains: active power could be used in the customer EMS to manage peak demand charges while reactive power could be used to provide voltage support for the DSO.

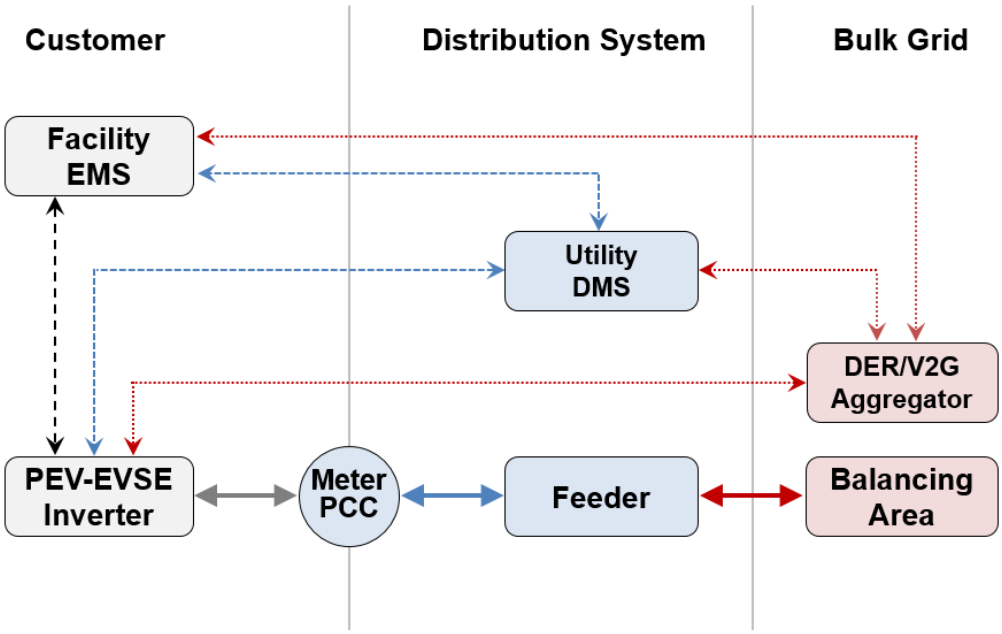

V2G Applications

This use case describes the creation DER entity consisting of an EVSE and PEV and the operation of that DER to perform some type of V2G application. Each of these applications could be a separate use case, but the communication protocols used between the EVSE and PEV are more directly influenced by whether the power conversion is performed onboard the PEV (SAE V2G-AC) or by the EVSE (SAE V2G-DC).

The table below lists some potential V2G applications by the domain of the controlling entity for the V2G application. The power flow of the DER impacts all domains but the specific V2G application is controlled by only one. A DER can engage simultaneously in different applications, but coordination may be required between the controlling entities for each application. The System level applications are controlled by a V2G or DER aggregator because no single PEV has sufficient power to bid into an ISO/RTO market. Some applications can be operated simultaneously.

The Operational Bandwidth is the update rate that active and reactive power is changed by the DER in response to either commands from the EMS or direct measurements by the DER of voltage, frequency, or other parameters. Dynamic

functions, like volt-VAR, operate autonomously using function curves that are periodically provided to the EVSE. Frequency Regulation in response to Automatic Generation Control (AGC) signals from the ISO/RTO every few seconds is the most demanding for communication protocol and system.

SAE has defined certain functions by which a utility could engage a vehicle for V1G and V2G applications. SAE U6, Basic DER, is a single function from the referenced ERPI report "Common Functions for Smart Inverters" known as Battery Storage: Coordinated Charge/Discharge Management Function." This same function in IEC 61850-90-7 is known as INV4. SAE U7, Advanced DER, collects many other EPRI/IEC functions. The specific function used for the V2G application within the U7 grouping is listed. All new DER in California are expected to implement the Ride Through and Volt-VAR after September 2017. The U6 function can be used to directly control the rate of charging as a V1G application for EVSEs or PEVs that are not capable of discharging.

Domain	V2G (DER) Application Examples	Operational Bandwidth	SAE Utility Functions
System	Real Time Energy Market	Minutes	U6
System	AGC Frequency Regulation	Seconds	U6
Distribution	L/H V/F Ride Through (Required by Rule 21)	Cycles	U7 Ride Through
Distribution	Dynamic Volt-VAR (Required by Rule 21)	Cycles	U7 Volt-VAR
Distribution	Dynamic Frequency-Watt	Cycles	U7 Freq-Watt
Distribution	Dynamic Volt-Watt	Cycles	U7 Volt-Watt
Distribution	Manage Active Power	Minutes	U6
Customer	Manage Facility Energy Charges	Hours	U6
Customer	Limit Facility Peak Demand Charge	Minutes	U6
Customer	Power Factor Compensation	Cycles	U7 Watt-PF

Approval by Utility of Interconnection of DER (SAE V2G-DC Type)

A facility owner cannot just connect a DER to a circuit in the facility and discharge power, even if there is no net export of power to the utility grid. If the facility circuit is connected to the utility grid, the facility owner must apply to the utility to interconnect the DER. If the utility approves the DER for interconnection, the utility and customer enter an Interconnection Agreement. In California, CPUC Rule 21 Generator Facility Interconnection defines this requirements and approval process.

There is a simplified process for approval of small PV systems. The PV inverter OEM submits the device to a NRTL to be tested and listed by a NRTL to the California Supplement of UL 1741. The customer then applies to interconnect with the utility using a simplified form that provides the inverter model number. The PV system can be turned on after the utility approves the application. A similar process can be used for the EVSE. The EVSE OEM would submits the device to a NRTL to be tested and listed to the California Supplement to UL 1741. A similar, but not yet existing procedure, could be followed to approve the SAE V2G-DC EVSE installation. The PEV is not visible beyond the EVSE (and is just an interchangeable battery) there is no need for the utility to approve each PEV model that could plug into the EVSE.

V2G Application Scenario

It is assumed that the charging site has an EVSE with inverter listed to UL 1741 CA and has an internet connection to a DER control entity (V2G Owner) for some V2G/DER application. It can be assumed that this will be frequency regulation with a V2G aggregator. This uses bidirectional flow to a commanded forward or reverse power level every few seconds. The figure below shows five major steps in the process. The PEV owner enrolls with the V2G application and some initial setup is required. The PEV may engage in multiple sessions over the life of an agreement. After each session and the PEV disconnects, some business processes will be executed. And at some point, the PEV may cancel the agreements.

The figure blows up a single session which shows there may need to be some vehicle setup at the time of plug-in and the vehicle may charge or wait until the V2G application starts. It is during the execute portion that the controller and the PEV inverter may be engaged in directly following commands to the PEV may be operating autonomously, as determined by the functions.

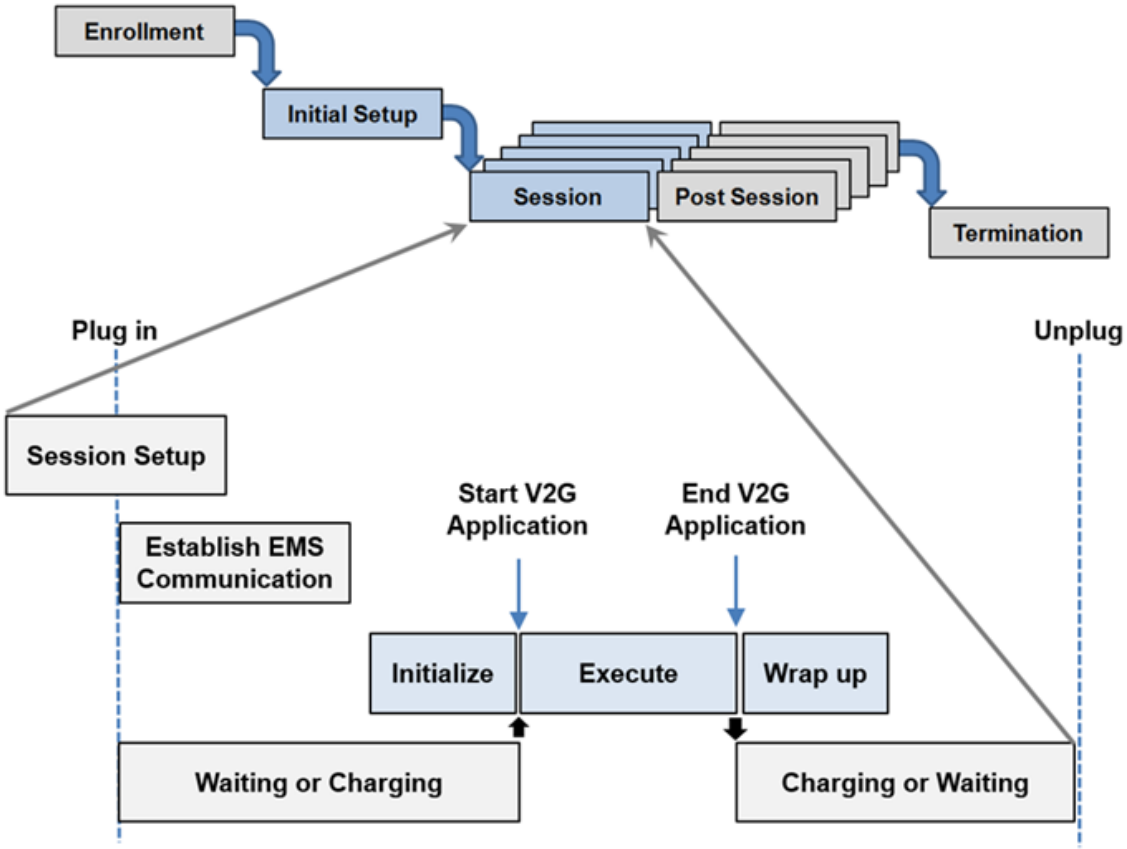

V2G Application Step by Step Analysis

Process Step	Actor(s)	Description
1 - Enrollment	V2G Owner EVSE Owner	V2G Owner promotes a V2G program and makes enrollment materials available to EVSE owners. EVSE owner provides completed enrollment information to V2G owner. V2G owner accepts the application and provides V2G setup materials to the EVSE owner. V2G owner sets up the EVSE in the V2G EMS and other back office systems.
	EVSE Owner PEV Owner	EVSE owner promotes use of DC power flow and makes enrollment materials available to PEV owner. PEV owner provides completed enrollment information to EVSE owner. EVSE owner accepts the application and provides DC flow setup materials to the PEV owner. EVSE owner sets up the PEV in the EVSE and any back-office systems.
2 - Initial Setup	EVSE Owner EVSE	The appropriate settings are manually entered using EVSE controls and displays to allow the EVSE to participate as a DER device in the enrolled V2G program. This can be done as a background update during another charging event or at the start of the first session for this new V2G program.
	PEV Owner PEV	The appropriate settings are manually entered using PEV controls and displays to allow the PEV to participate in DC charging, DC forward power flow, and DC reverse power flow with the designated EVSE inverter.
3 - Session		
3.1 - Plug-in PEV	PEV Owner	The PEV is connected to the DC EVSE
3.2 - Session Setup	PEV Owner PEV EVSE	PEV owner enters session settings using PEV controls and displays and allows the PEV battery to be used by the EVSE inverter for DC power flow. EVSE retrieves information from PEV, as needed, to perform session setup of the EVSE for the V2G program.
3.3 - Establish Communication	EVSE EMS	EVSE and EMS establish secure communications and enable the EVSE to engage as a DER device under control of the EMS for the enrolled V2G program.
	PEV EVSE	PEV and EVSE establish secure communications to allow for management and control of DC power flow by the EVSE inverter. J2847/2 governs communication.
3.4 - Initialize V2G	EVSE PEV EMS	Prior to or immediately at the start of the active V2G engagement of the EVSE as a DER, the EVSE and EMS exchange information that is expected to remain constant during the execution phase. EVSE retrieves information from PEV as needed to provide to EMS or as needed by EVSE to manage DC power flow.
3.5 - Execute V2G	EVSE PEV EMS	EMS receives state information from EVSE and provides DER control commands to EVSE continually during the active engagement. EVSE retrieves information from PEV as needed to provide to EMS or as needed by EVSE to manage DC power flow.
3.6 - Wrap up V2G	EVSE PEV EMS	EVSE receives final state information from PEV and then EMS receives final consolidated state information from EVSE. EVSE may acquire information from PEV, meter, or other devices to relay to EMS or EMS may directly engage other systems.
3.7 - Updates	EVSE Owner EVSE EMS	EVSE owner may perform data entry that is needed for a future V2G session. Automatic updates by the EMS of parameters or curves for a future session may also occur. If required for the current session this must have been done during a prior session or during the session setup phase.
3.8 - Unplug PEV	PEV Owner EVSE	The PEV is disconnected from the EVSE. The EVSE should terminate and wrap up any V2G program that has not already ended.

Process Step	Actor(s)	Description
4 - Post Session	EMS V2G Owner	EMS provides V2G engagement information for EVSE to the V2G Owner back office systems for performance assessment and compensation of EVSE owner.
	EVSE EVSE Owner	EVSE provides PEV engagement information to EVSE owner's back office systems for performance assessment and compensation of PEV owner.
5 - Termination	PEV Owner EVSE Owner PEV EVSE	PEV owner provides request to EVSE owner to no longer participate in the DC flow program in accordance with terms of enrollment. EVSE owner accepts termination and resets EVSE. PEV owner resets PEV to disable DC program. This could be automatic for single event enrollments.
	EVSE Owner V2G Owner EVSE EMS	EVSE owner provides request to V2G owner to no longer participate in the enrolled V2G program in accordance with terms of enrollment. V2G owner accepts termination and resets EMS. EVSE owner resets EVSE to disable V2G program. This could be automatic for single event enrollments.

References

SAE J2836/3 Surface Vehicle Information Report: Use Cases for Plug-in Vehicle Communication as a Distributed Energy Resource. Establishes use cases for a Plug-in Electric Vehicle (PEV) communicating with an Energy Management System (EMS) as a Distributed Energy Resource (DER) which must be supported by SAE J2847/3. This mode of reverse power flow is designated as SAE V2G-AC. This document also provides guidance for updates to SAE J2847/2 to allow an inverter in an EVSE to use the PEV battery when operating together as a DER. This mode of reverse power flow is designated as SAE V2G-DC. Beyond these two specific communication objectives, this document is also intended to serve as a broad guide to the topic of reverse power flow.

SAE J2847/2 Surface Vehicle Recommended Practice: Communication Between Plug-In Vehicles and Off-Board DC Chargers. Establishes requirements and specifications for communication between Plug-in Electric Vehicle (PEV) and the DC Off-board charger. This document applies to the off-board DC charger for conductive charging, which supplies DC current to the PEV battery the electric vehicle through a SAE J1772™ coupler. Communications will be on the SAE J1772 Pilot line for PLC communication A future version of this document is intended to provide messages to support bidirectional flow with an inverter located in the EVSE (V2G-DC). The messages are intended to be harmonized with ISO/IEC 15118 for DC conductive transfer.

SAE J2847/3 Surface Vehicle Recommended Practice: Communication for Plug-in Vehicles as a Distributed Energy Resource. This applies to a Plug-in Electric Vehicle (PEV) which is equipped with an onboard inverter (SAE V2G-AC) and communicates using the IEEE 2030.5 Smart Energy Profile 2.0 Application Protocol (SEP2). It is a supplement to the SEP2 Standard, which supports the U6 and U7 use cases defined by J2836/3TM. It provides guidance for the use of the SEP2 Distributed Energy Resource Function Set with a PEV. It also provides guidance for the use of the SEP2 Flow Reservation Function Set, when used for discharging. It is not intended to be a comprehensive guide to the use of SEP2 in a PEV.

Common Functions for Smart Inverters, Version 3, EPRI, Palo Alto, CA: 2014 3002002233 – Basis for California Rule 21 Smart Inverter Working Group effort

IEC/TR 61850-90-7 Communication networks and systems for power utility automation - Part 90-7: Object models for power converters in distributed energy resources (DER) systems