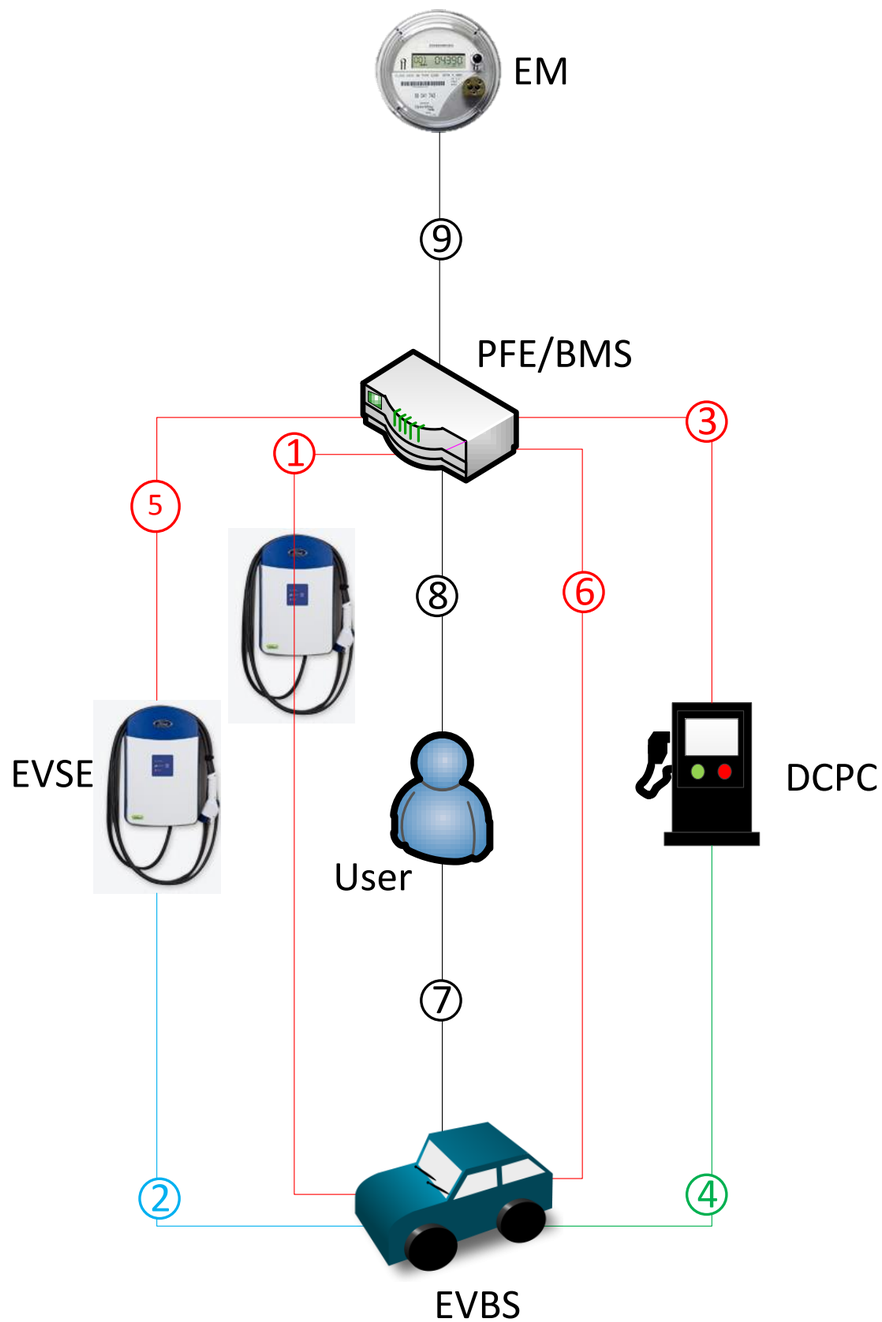

VGI end-to-end Application Interfaces

	Charging		DER	
	AC	DC	AC	DC
1- PFE/BMS to EV (Bridged through EVSE)	X		X	
2 (+5)- EVSE to EVBS (Needs 5 for end to end)			X	
3- PFE/BMS to DCPC				X
4 (+3)- EVBS to DCPC		X		X
5- Direct to EVSE (Interface 2 protocol or J1772 PWM to EV)	X		X	X
6- Telematics direct to EV	X		X	X
7- BMS/EVSE to User (Secondary)	X		X	X
8- EV/Telematics to User (Secondary)			X	X
9- Energy Meter to PFE/BMS (Secondary)				

AC Charging (SAE/SEP2)
J2836/1, J2847/1, IEEE 2030.5

J2836/1 Use Cases
J2847/1 Messages
J2931/1 Requirements
J2931/4 PLC protocol

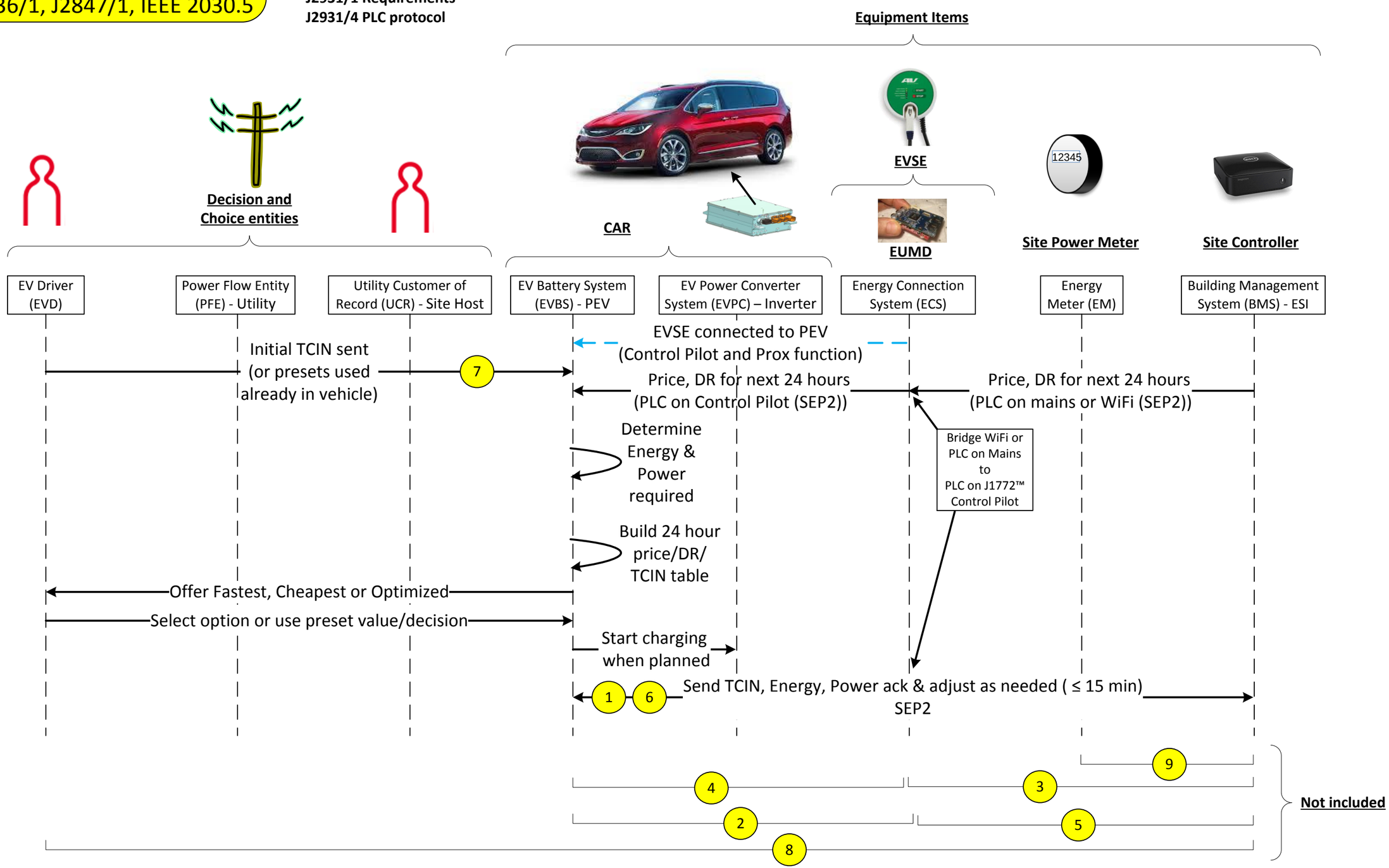

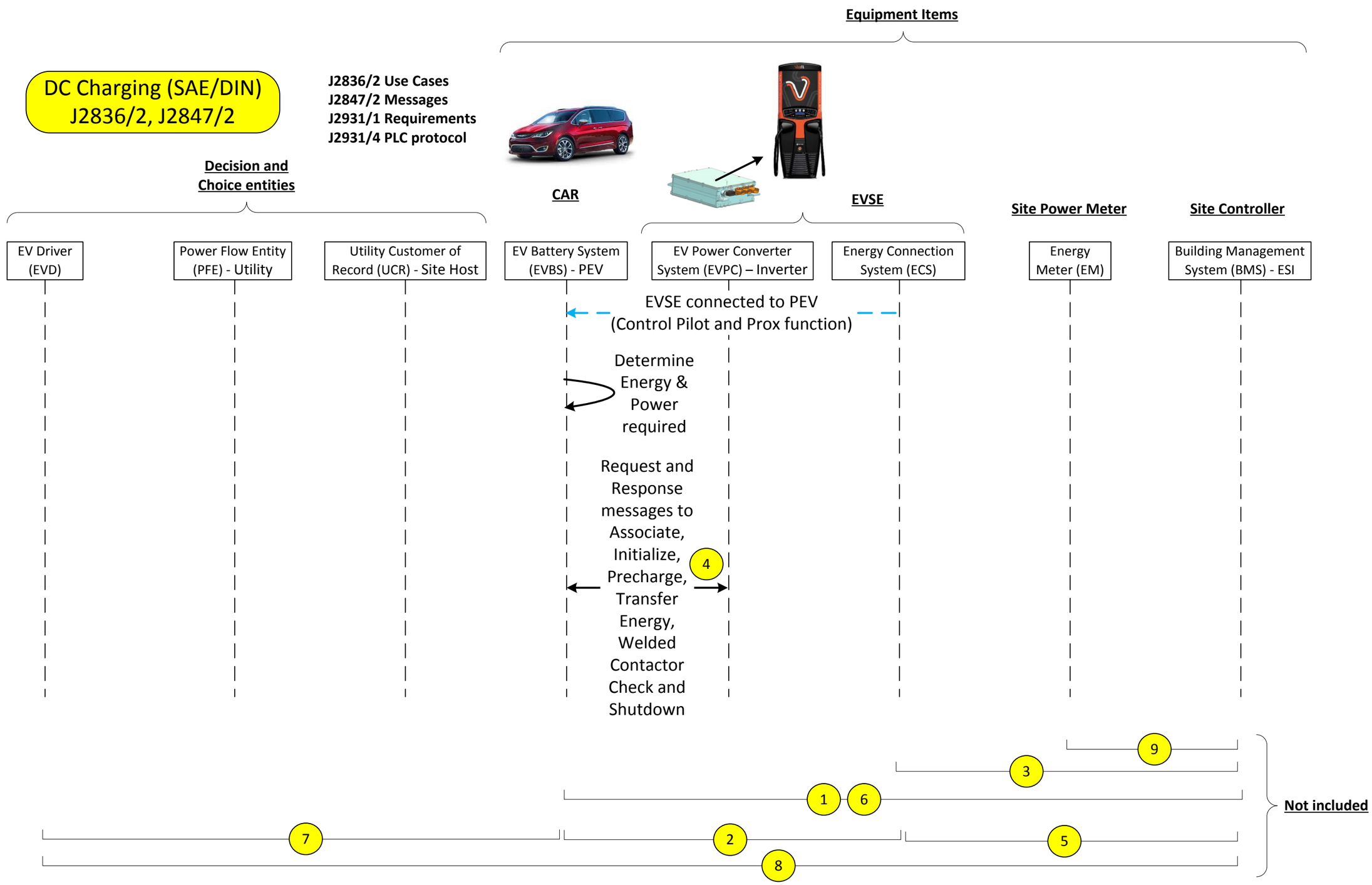
DC Charging (SAE/DIN)
J2836/2, J2847/2
J2836/2 Use Cases
J2847/2 Messages
J2931/1 Requirements
J2931/4 PLC protocol
Equipment Items
Decision and Choice entities
CAR
EVSE
Site Power Meter
Site Controller
EV Driver (EVD)
Power Flow Entity (PFE) - Utility
Utility Customer of Record (UCR) - Site Host
EV Battery System (EVBS) - PEV
EV Power Converter System (EVPC) – Inverter
Energy Connection System (ECS)
Energy Meter (EM)
Building Management System (BMS) - ESI
EVSE connected to PEV
(Control Pilot and Prox function)
Determine Energy & Power required
Request and Response messages to Associate, Initialize, Precharge, Transfer Energy, Welded Contactor Check and Shutdown
4
9
3
1
6
7
2
5
8
Not included

AC DER (SAE/SEP2)
J2836/3, J2847/3, IEEE 2030.5

J2836/3 Use Cases
J2847/3 Messages
J2931/1 Requirements
J2931/4 PLC protocol
J3072 Inverter Specs

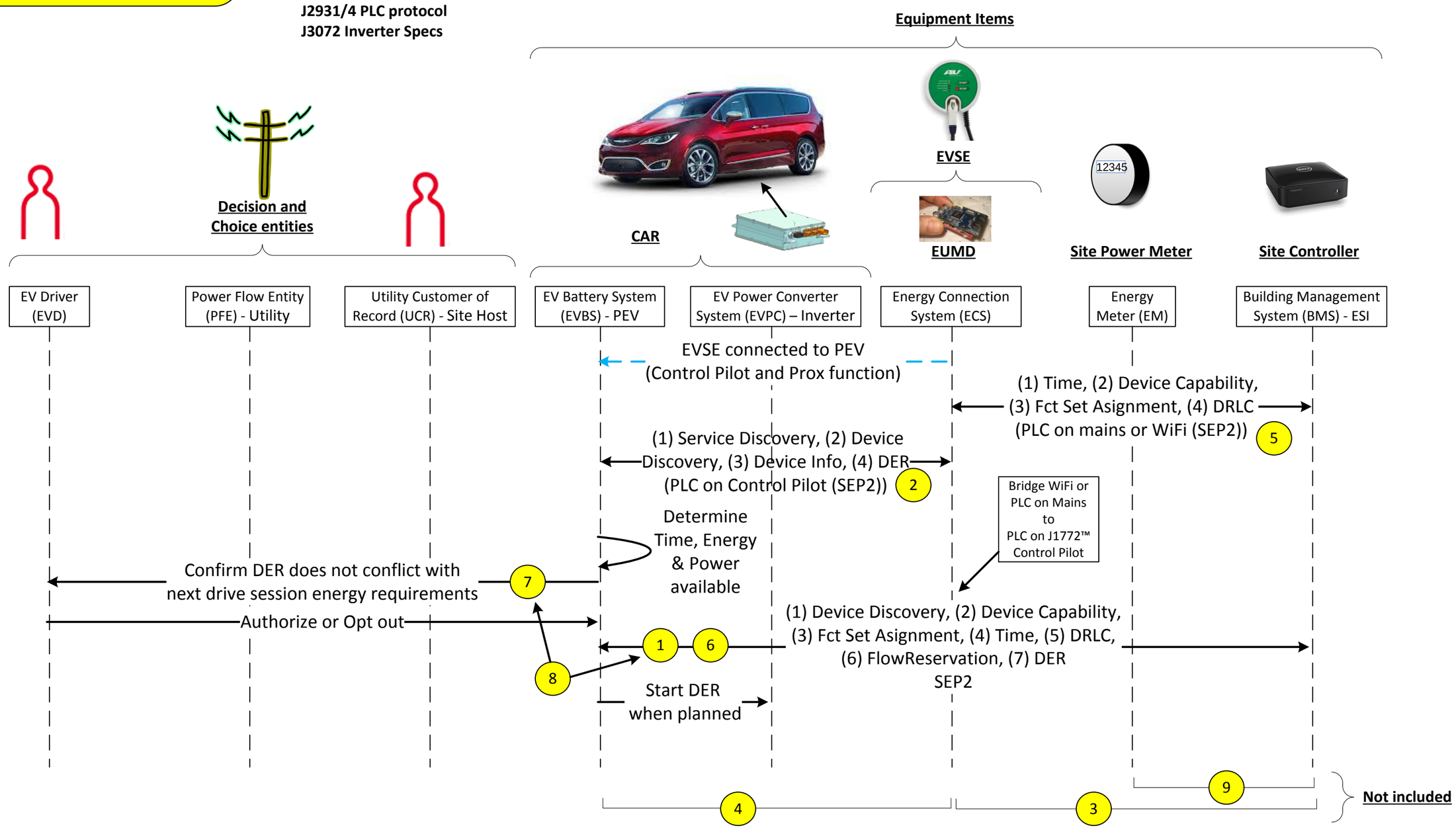

DC DER (SAE/SEP2)
J2836/3, J2847/2, IEEE 2030.5
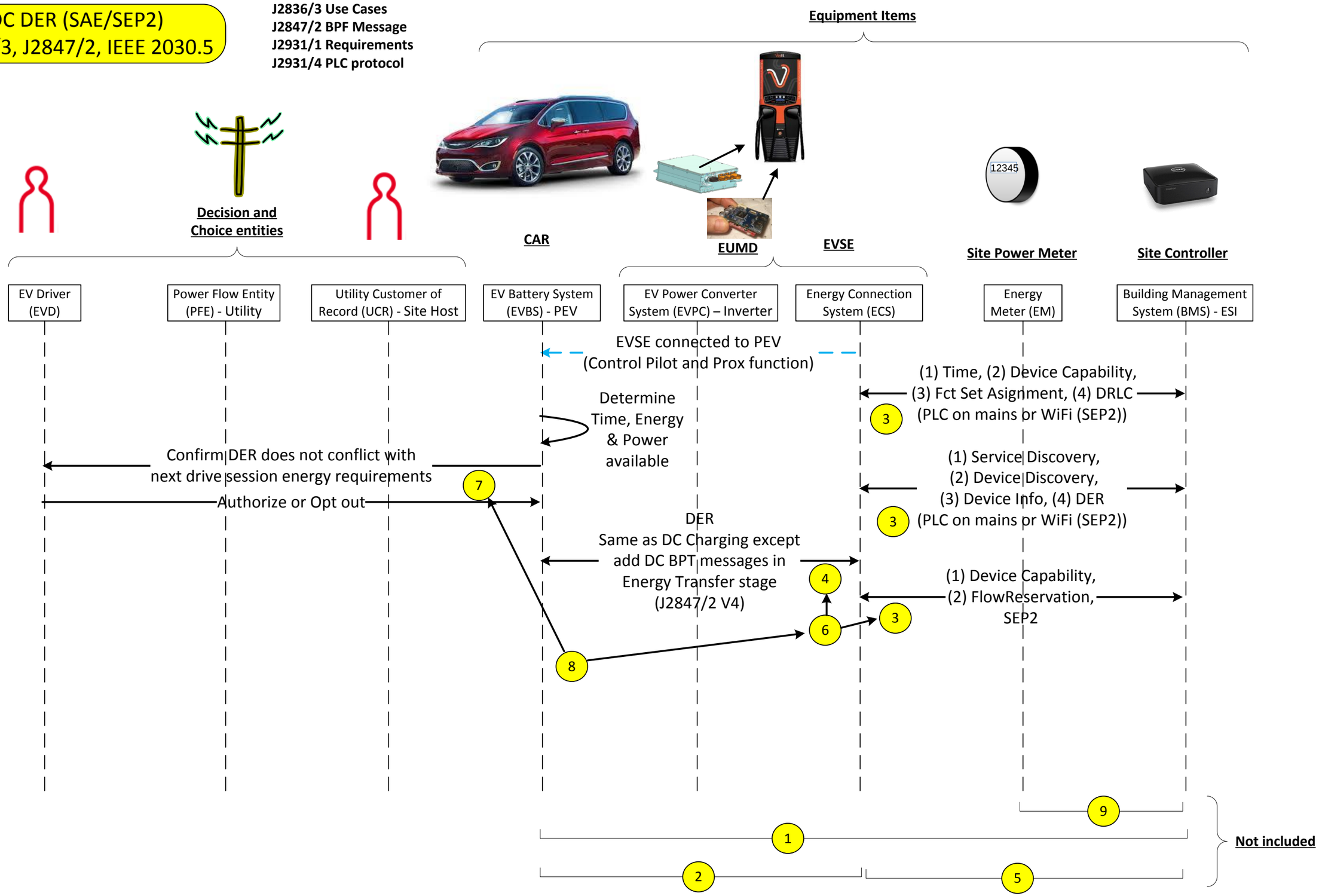
J2836/3 Use Cases
J2847/2 BPF Message
J2931/1 Requirements
J2931/4 PLC protocol